International Motors, LLC
international.com

2701 International Drive
Lisle, IL, 60532, USA

Phone: 331-332-5000
Toll Free: 800-448-7825

International® HV, HX, LT, MV, RH and 2021 and Newer HX Electrical Systems Integration Guide

4328925R1

Table of Contents

1. Revision Summary Table **13**

2. Forward: **14**

3. Vehicle Architectures: **16**

3.1. Multiplexing Architecture: 16
3.2. Vehicle Multiplex Architecture 17
3.3. Vehicle Power Distribution Architecture: 18

4. Body Control Module (BCM) **19**

4.1. Body Control Module Gen IV: 19
4.2. Body Control Module “Real-time Clock” Internal Power Source: 21
4.3. Body Control Module Gen IV Connector Composite: 22
4.4. Body Controller J1 Connector 1603 I/O & Part Number Detail: 23
4.5. Body Controller J2 Connector 1604 I/O & Part Number Detail: 24
4.6. Body Controller J3 Connector 1600 I/O & Part Number Detail: 25
4.7. Body Controller J4 Connector 1601 I/O & Part Number Detail: 26
4.8. Body Controller J5 Connector 1602 I/O & Part Number Detail: 27
4.9. Body Controller J6 Connector 1605 I/O & Part Number Detail: 28
4.10. Body Controller J7 Connector 1606 I/O & Part Number Detail: 29

5. Multiplex Switch-Packs (Center Panel Mounted) **30**

5.1. Multiplex Switch-Pack Housing: 30
5.2. Multiplex Switch-Pack Cover 30
5.3. Multiplex Switch-Pack Storage Bin: 30
5.4. Multiplex Switch-Pack Actuators, Blanks (plugs) and Indicators: 31
5.5. Multiplex Switch-Pack Warning Lights: 41
5.6. Switch Label Applique Sheet #1 (Utility/Wrecker): 43
5.7. Switch Label Applique Sheet #2 (Fire): 44
5.8. Switch Label Applique Sheet #3 (Limo/Bus/Propane): 45
5.9. Switch Label Applique Sheet #4 (Airport Refueler/Concrete Mixer): 46
5.10. Switch Label Applique Sheet #5 (Plow/Dump): 47
5.11. Switch Label Applique Sheet #6 (Tanker) 48
5.12. Switch Label Applique Sheet #7 (Ambulance/Fire): 49
5.13. Switch Label Applique Sheet #8 (Adv Fire/Ambulance): 50
5.14. Switch Label Applique Sheet #9 (On/Off/Blank): 51
5.15. Switch Label Applique Sheet #10 (Miscellaneous): 52

6. Customized Steering Wheel Switches **53**

7. Air Solenoid 4-Packs: **59**

7.1. Air Solenoid 4-Pack Wiring: 59
7.2. Air Solenoid 4-Pack Module Base: 60
7.3. Air Solenoids: 60

8. Lighting Control Module: **62**

8.1. Lighting Control Module Housing: 62
8.2. Lighting Control Module and Associated Parts: 62

9. Remote Power Module (RPM): **62**

9.1. Remote Power Module Composite View 63
9.2. Remote Power Module CAN Pass-through Connector 64
9.3. Body Equipment Power Output Connector 65
9.4. Body Equipment Signal Input Connector 66
9.5. Remote Power Module Address Jumper Locations 67
9.6. Remote Power Module Power Connections 67

10. Enhanced Remote Power Module (ERPM): **68**

11. Instrument Panels: **69**

11.1. Base Flat Instrument Panel: 69
11.2. Premium Flat Instrument Panel: 70
11.3. Wing Instrument Panel 71

12. Air Conditioning **72**

12.1. 16BAM/16ATC: Air Conditioner (International® Blend Air) with integral heater, defroster, and R134-A Refrigerant. 72

13. Air Solenoid Features (Normally Open, Closed and Air Horn) **74**

13.1. 08XKM: SWITCH, AIR HORN, PASSENGER Fire Truck Application; Switch Located in Instrument Panel (IP) Close to Passenger; Driver Also to Activate Air Horn with Lanyard. 74
13.2. 08WGA: SOLENOID, AIR for Customer Use; Provides (1) Normally Closed Pilot Air Source, Approx. 4-CFM, Includes Switch in Cab; Air Available Only with Key in “Ignition (IGN)” or “Accessory” Position; Air Will Exhaust with Key in “Off” Position. 75
13.3. 08WGB: SOLENOID, AIR for Customer Use; Provides (2) Normally Closed Pilot Air Source, Approx. 4-CFM, Includes Switch in Cab; Air Available Only with Key in “IGN” or “Accessory” Position; Air Will Exhaust with Key in “Off” Position. 77
13.4. 08WGC: SOLENOID, AIR for Customer Use; Provides (3) Normally Closed Pilot Air Source, Approx. 4-CFM, Includes Switch in Cab; Air Available Only with Key in “IGN” or “Accessory” Position; Air Will Exhaust with Key in “Off” Position. 79
13.5. 08WGD: SOLENOID, AIR for Customer Use; Provides (4) Normally Closed Pilot Air Source, Approx. 4-CFM, Includes Switch in Cab; Air Available Only with Key in “IGN” or “Accessory” Position; Air Will Exhaust with Key in “Off” Position. 81
13.6. 08WGP: SOLENOID, AIR for Customer Use; Provides (5) Normally Open Pilot Air Source, Approx. 4-CFM, Includes Switch in Cab; Air Exhausted Only with Key in “IGN” or “Accessory” Position; Air Will be Supplied with Key in “Off” Position. 84
13.7. 08WGR: SOLENOID, AIR for Customer Use; Provides (6) Normally Open Pilot Air Source, Approx. 4-CFM, Includes Switch in Cab; Air Exhausted Only with Key in “IGN” or “Accessory” Position; Air Will be Supplied with Key in “Off” Position. 86
13.8. 08WKM: SOLENOID, AIR for Customer Use; Provides (6) Normally Closed Pilot Air Source, Approx. 4-CFM, Includes Switch in Cab; Air Available Only with Key in “Ignition” or “Accessory” Position; Air Will Exhaust with key in “Off” Position. 88
13.9. 08WKX: SOLENOID, AIR for Customer Use; Provides (8) Normally Closed Pilot Air Source, Approx. 4 CFM, Includes Switch in Cab; Air Available Only with Key in “Ignition” or “Accessory” Position; Air Will Exhaust with Key in “Off” Position. 90

14. Battery Disconnect Switch Features **92**

14.1. 08RLZ: BATTERY DISCONNECT SWITCH {Cole-Hersee 75920-06} 300 Amp, Disconnects Cab Power, Does Not Disconnect Charging Circuits, Locks with Padlock, Battery Box Mounted. 92
14.2. 08RMH: BATTERY DISCONNECT SWITCH {Cole-Hersee 75920-06} 300 Amp, Disconnects Charging Circuits, Locks with Padlock, Battery Box Mounted 94
14.3. 08WJV: BATTERY DISCONNECT SWITCH {Joseph Pollak} Locking, Lever Operated, Disconnects Power to PDC, Does Not Disconnect Charging Circuits, Cab Mounted. 96
14.4. 08WJW: BATTERY DISCONNECT SWITCH {Joseph Pollak} Key Operated, Disconnects Power to PDC, Does Not Disconnect Charging Circuits, Cab Mounted. 99
14.5. 08XHD: BATTERY DISCONNECT SWITCH 300 Amp, Disconnects Charging Circuits, Locks with Padlock, Cab Mounted 101
14.6. 08XHV: BATTERY DISCONNECT SWITCH for Cab Power Disconnect Switch, Disconnects Power to Power Distribution Center (PDC) and Body Builder Through Solenoid, Does Not Disconnect Charging Circuits, Locks with Padlock, Cab Mounted 102
14.7. 08XNB: BATTERY DISCONNECT SWITCH 300 Amp, Disconnects Power to Power Distribution Center (PDC), Does Not Disconnect Charging Circuits, Locks with Padlock, Cab Mounted 104
Refer to the applicable International® Circuit Diagrams and Service Manuals 106
14.8. 08WZP: BATTERY WARNING Green Indicator Mounted on Left Side of Instrument Panel above left side switch panel. 106

15. Body Builder Integration Harnesses **108**

15.1. 08WZG: JUNCTION BLOCK Stud, 100-Amp Battery Feed, protected by a Fusible Link, Stud to be used for Body Builder Feeds Inside Cab. 108
15.2. RP1226 Features. 109
15.2.1. 08XMB: WIRING (1)TMC RP1226 BEHIND CTR CONSOLE CONNECTOR, DASH, CENTER PANEL Cab Wiring for TMC RP1226 Vehicle Accessory Connector; Includes 14-pin Connector with Switched Power, Battery Power, Ignition Power, Ground & Body 250K Datalink, Connector Located Behind Instrument Panel Center Console 114
15.2.2. 08XMZ: CONNECTOR, DASH, CENTER PANEL Cab Wiring for (2) TMC RP1226 Vehicle Accessory Connectors; Includes (2) 14-pin Connectors with Switched Power, Battery Power, Ignition Power, Ground & Body 250K Datalink, Connector Located Behind Instrument Panel Center Console 115

15.2.3. 08XNA: CENTER PANEL Cab Wiring for (3) TMC RP1226 Vehicle Accessory Connectors; Includes (3) 14-pin Connectors with Switched Power, Battery Power, Ignition Power, Ground & Body 250K Datalink, Connector Located Behind Instrument Panel Center Console. 115
15.2.4. 08XND: CONNECTOR, DASH, AUX PANEL CAB WIRING FOR TMC RP1226 VEHICLE ACCESSORY CONNECTOR; INCLUDES 14-PIN CONNECTOR WITH SWITCHED POWER, BATTERY POWER, IGNITION POWER, GROUND & BODY 250K DATALINK, CONNECTOR LOCATED BEHIND OPTIONAL GAUGE LOCATION ON IP WING PANEL 115
15.2.5. 08XMW: CONNECTOR, OVERHEAD (1) TMC RP1226 CONNECTOR, OVERHEAD Cab Wiring for TMC RP1226 Vehicle Accessory Connector; Includes 14-pin Connector with Switched Power, Battery Power, Ignition Power, Ground & Body 250K Datalink, Connector Located at Overhead Console, for Customer Supplied Cameras. 116
15.3. 08XNL: CONNECTORS, CHASIS/BODY INTERFACE Cab Wiring for TMC RP170A 8-pin Conn w/Switched, Battery, Ignition Power & Ground Located on Cab Floor; 31-pin Conn w/Engine, Transmission & Chassis, Data Networks Located on Cab Floor Between Driver & Pass Seats; 14-pin Conn w/Chassis & Body Lightning Signals Located Left Frame Back of Cab 116
15.4. 08XPC: ACCESSORY WIRING, SPECIAL for Body Builder Feeds & Road Speed Wire Coiled Behind Driver Seat for Customer Use, Includes 15 & 5 Amp Ignition, (2) 20 Amp Battery, (2) Ground and Road Speed 122
15.5. 08XPD: ACCESSORY WIRING, SPECIAL for Body Builder Feeds & Road Speed Wire Coiled Behind Driver Seat for Customer Use, Includes 15 & 5 Amp Ignition, (2) 20 Amp Battery, (2) Ground and Road Speed Unconditioned Manual Transmission Output Shaft Speed, Additional Body Builder Signal 124
15.6. 60ABM: BDY INTG, RPM I/O HARNESS, Includes a Harness with 6 Input Blunt Cut wires and 6 Output Blunt Cut Wires, for use with one RPM. 125
15.7. 60ABN: BDY INTG, RPM I/O HARNESS, Includes 2-Harnesses with 6-Input Blunt Cut wires and 6 Output Blunt Cut Wires, for use with two RPMs. 126
15.8. 60ACW: BODY INTG, I/O EXPANSION HARNESS (for Diamond Logic® Builder only) includes a harness with five blunt-cut wires routed on lower left of IP. Two GND active inputs and two (0.5 AMP) relay driver outputs (GND active) are provided. 127

16. Body Builder Wiring, for Stop/Turn/Taillights/ Though Power: 129

16.1. 08HAA: BODY BUILDER WIRING To EOF, With Stop, Tail, Turn, and Marker Lights Circuits, and Ground (GND), Less Trailer Socket. 129
16.2. 08HAB: BODY BUILDER WIRING, BOC AT LEFT OF FRAME, includes 7-way sealed connector for tail/amber/backup/accessory power/GND and sealed connectors for combination stop/turn and a 3-way for separate stop/turn lights. 133
16.3. 08HAB: BODY BUILDER WIRING, Back of Day Cab at Left Frame or Under Sleeper, Extended or Crew Cab at Left Frame; Includes Sealed Connectors for Tail/Amber Turn/Marker/Backup/Ground and Sealed Connector for Stop/Turn 138
16.4. 08HAE: BODY BUILDER WIRING, Rear of Frame; Includes Sealed Connectors for Tail/Amber Turn/Marker/ Backup/Accessory Power/Ground and Sealed Connector for Stop/Turn. 142
16.5. 08HAE: BODY BUILDER WIRING, Rear of Frame; Includes Sealed Connector for Tail/Amber Turn/Marker/ Backup/Accessory Power/Ground and Sealed Connector for Stop/Turn. 147
16.6. 08HAG: ELECTRIC TRAILER BRAKE/LIGHTS Accommodation Package to Rear of Frame (ROF); for Separate Trailer Stop, Tail, Turn, Marker Light Circuits; Includes Electric Trailer Brake Accommodation Package with Cab Connections for Mounting Customer- Installed Electric Brake Unit, Less Trailer Socket. 152
16.7. 08HAH: ELECTRIC TRAILER BRAKE/LIGHTS Accommodation Package to Rear of Frame (ROF); for Combined Trailer Stop, Tail, Turn, Marker Light Circuits; Includes Electric Trailer Brake Accommodation Package with Cab Connections for Mounting Customer- Installed Electric Brake Unit, Less Trailer Socket. 156
16.8. 08HAT: BODY BUILDER WIRING Includes Wires Installed through the Dash Panel and End in Engine Compartment, In Cab Wire Ends Will Have body controller Input Terminals, Engine Compartment Wire Ends will have Sealed Connectors. 160
16.9. 08HAU: BODY BUILDER WIRING INSIDE CAB; Includes Sealed Connectors for Tail/Amber, Turn/Marker/Backup/Accessory, Power/Ground, and Stop/Turn. 162
16.10. 08HAV: SPECIAL WIRING HARNESS, BODY with Additional 20" Length to Rear of Chassis Harness, Coiled at End of Frame. 167
Note: Requires electric trailer brake/lights 08HAH 167
16.11. 08NAA: TAILLIGHT WIRING MODIFIED Includes: Wiring for Standard Left & Right Tail Lights; Separate 8.0' of Extra Cable Wiring for Left & Right Body Mounted Tail Lights. 167
16.12. 08THG: AUX. TRAILER SOCKET 7-Way; With Battery Fed Circuit to Center Pin, with 25-AMP Fuse and Relay Controlled by Switch with Indicator Light on Instrument Panel (IP) Fed from Hot Battery Feed (Not Wired Thru Key Switch). 169
16.13. 08THH: AUX. TRAILER SOCKET 7-Way; With Battery Fed Circuit to Center Pin, with 25 AMP Fuse and Relay Controlled by Switch with Indicator Light Controlled by Accessory Side of Key Switch, Switch Mounted on IP. 171

16.14. 08THU: TRAILER SOCKET 7-Way; with Battery Fed Circuit to Center Pin, with 30 Amp Fuse and Relay Controlled by Switch with Indicator Light on Instrument Panel Fed From Hot Battery Feed, When Parking Brake Is Applied, Not Wired Thru Key Switch. ... 173
16.15. 08TKK: TRAILER AUXILIARY FEED CIRCUIT for Electric Trailer Brake Accommodation/Air Trailer ABS; With 30-Amp Fuse and Relay, Controlled by Ignition Switch. ... 174
16.16. 08TME: TRAILER CONNECTION SOCKET 7-Way; Mounted at EOF, Wired for Turn Signals Independent of Stop, Compatible with Trailers That Have Amber or Side Lamps. ... 175
16.17. 08TMG: TRAILER CONNECTION SOCKET 7-Way; Mounted at EOF, Wired for Turn Signals Combines with Stop, Compatible with Trailers That Use Combined Stop, Tail, Turn Lamps. ... 179
16.18. 08TMN: TRAILER CONNECTION SOCKET {Phillips STA-DRY} 7-Way; Equipped with ABS Feed, Mounted at BOC, and End of Frame Locations. ... 183
16.19. 60AKK: BDY INTG, HEADLIGHTS, WIG WAG High Beam Wig Wag with Park Brake Interlock, Park Brake Disables Wig Wag. ... 186
16.20. 60AKL: BDY INTG, HEADLIGHTS, WIG WAG High Beam Wig Wag with Park Brake Interlock, Park Brake Disables High Beam Wig Wag, Enables Low Beam Wig Wag. ... 188

17. CB and 2-Way Radio Accommodation Packages ... 191

17.1. 08RBK: CB ANTENNA (2) {Pana-Pacific} Full Wave; 4.0' Length Includes "International®" Name on Top. ... 191
17.2. 08RCB: CB RADIO Accommodation Package; Header Mounted; Feeds from Accessory Side of Ignition Switch; Includes Power Source and Two Antenna Bases with Wiring. ... 192
17.3. 08REA: 2-WAY RADIO Wiring Effects; Wiring with 20-Amp Fuse Protection, Includes Ignition Wire with 5-Amp Fuse, Wire Ends Heat Shrink and 10' Coil Taped to Base Harness. ... 193
17.4. 08RGA: 2-WAY RADIO Wiring Effects; Wiring with 20-Amp Fuse Protection, Includes Ignition Wire with 5-Amp Fuse, Wire Ends Heat Shrink and Routed to Center of Header Console in Cab. ... 194

18. Engine Speed Control Features and Accommodation Packages ... 194

18.1. 12VGV: ACCESSORY WIRING, SPECIAL for Road Speed Wire Coiled Under Instrument Panel for Customer Use, Unconditioned Manual Transmission Output Shaft Speed, Additional Body Builder Signal Conditioning may be Required to Utilize Signal ... 194
18.2. 12VXT: THROTTLE, HAND CONTROL Engine Speed Control; Electronic, Stationary, Variable Speed; Mounted on Steering Wheel. ... 196
18.3. 12VXU: THROTTLE, HAND CONTROL Engine Speed Control for AESC; Electronic, Stationary Pre-Set, Two Speed Settings; Mounted on Steering Wheel. ... 197
18.4. 12VXV: THROTTLE, HAND CONTROL Engine Speed Control for AESC; Electronic, Mobile (Range 2 to 20-MPH), Variable Speed; Mounted on Steering Wheel. ... 198
18.5. 12VGV: ACCESSORY WIRING, SPECIAL for Road Speed Wire Coiled Under Instrument Panel for Customer Use, Unconditioned Manual Transmission Output Shaft Speed, Additional Body Builder Signal Conditioning may be Required to Utilize Signal ... 199
18.6. 12VYL: ACCESSORY WIRING, SPECIAL for Road Speed Wire Coiled Under Instrument Panel for Customer Use. ... 200
18.7. 12VGA Post 2022 Model Year: ENGINE CONTROL, REMOTE MOUNTED for AESC, with S13 Engines ... 203
18.7.1. 12VGA Preset Set Speed - Wiring Diagram: ... 206
18.7.2. 12VGA Preset Resume Speed - Wiring Diagram: ... 207
18.7.3. 12VGA Preset Set Resume Speed - Wiring Diagram: ... 207
18.7.4. 12VGA Variable Switch Control - Wiring Diagram: ... 208
18.7.5. 12VGA Variable Pedal Control - Wiring Diagram: ... 209
18.7.6. 12VGA Aux Tachometer Output - Wiring Diagram: ... 210
18.7.7. 12VGA Aux Speedometer Output - Wiring Diagram: ... 210
18.7.8. 12VGA Engine Waring Lamp - Wiring Diagram: ... 211
18.8. 12VGA Pre 2022 Model Year A26: ENGINE CONTROL, REMOTE MOUNTED for AESC, for A26 Engines ... 213
18.8.1. 12VGA Preset Set Speed - Wiring Diagram: ... 215
18.8.2. 12VGA Preset Resume Speed - Wiring Diagram: ... 216
18.8.3. 12VGA Preset Set Resume Speed - Wiring Diagram: ... 217
18.8.4. 12VGA Variable Switch Control - Wiring Diagram: ... 218
18.8.5. 12VGA Variable Pedal Control - Wiring Diagram: ... 219
18.8.6. 12VGA Transfer Case Speed Disable - Wiring Diagram: ... 220
18.8.7. 12VGA Aux Tachometer Output - Wiring Diagram: ... 221
18.8.8. 12VGA Aux Speedometer Output - Wiring Diagram: ... 222
18.8.9. 12VGA Engine Waring Lamp - Wiring Diagram: ... 223
18.9. 12VGA Post 2021 Model Year A26: ENGINE CONTROL, REMOTE MOUNTED for AESC, for A26 Engines ... 225
18.9.1. 12VGA Preset Set Speed - Wiring Diagram: ... 226
18.9.2. 12VGA Preset Resume Speed - Wiring Diagram: ... 227
18.9.3. 12VGA Preset Set Resume Speed - Wiring Diagram: ... 227

18.9.4. 12VGA Variable Switch Control - Wiring Diagram:.... 228
18.9.5. 12VGA Variable Pedal Control - Wiring Diagram:.... 229
18.9.6. 12VGA Transfer Case (Split Shaft) Speed Disable - Wiring Diagram:.... 230
18.9.7. 12VGA Aux Tachometer Output - Wiring Diagram:.... 231
18.9.8. 12VGA Aux Speedometer Output - Wiring Diagram: 231
18.9.9. 12VGA Engine Waring Lamp - Wiring Diagram: 232
18.10. 12VGU: ENGINE CONTROL, REMOTE MOUNTED Provision for; Includes Wiring for Body Builder Installation of PTO Controls for Cummins X15 Engines.... 234
18.10.1. 12VGU Remote PTO Preset Set Speed - Wiring Diagram (Heavy Extreme Series):.... 238
18.10.2. 12VGU: Remote Station PTO Preset Set Resume Speed – Wiring Diagram (Heavy Extreme Series): 239
18.10.3. 12VGU: Remote Accelerator - Wiring Diagram (Heavy Extreme Series):.... 240
18.10.4. 12VGU: Auxiliary Tachometer - Wiring Diagram (Heavy Extreme Series):.... 240
18.10.5. 12VGU: Engine or Vehicle Speed Switch - Wiring Diagram (Heavy Extreme Series):.... 241
18.11. 12XAT: ENGINE CONTROL, REMOTE MOUNTED Provision for; Includes Wiring for Body Builder Installation of PTO Controls; with Ignition Switch Control for Cummins ISB/B6.7 or ISL/L9 Engines.... 242
18.11.1. 12XAT: SEVERE VOCATIONAL SERIES - Wiring Diagrams: 245
18.11.1.1. 12XAT Preset Set Speed - Wiring Diagram (Severe Vocational Series):.... 245
18.11.1.2. 12XAT: Preset Resume Speed - Wiring Diagram (Severe Vocational Series): 246
18.11.1.4. 12XAT: Preset Set Resume Speed – Wiring Diagram (Severe Vocational Series): 247
18.11.1.5. 12XAT: Variable Pedal Control - Wiring Diagram (Severe Vocational Series): 248
18.11.1.6. 12XAT: Auxiliary Tachometer - Wiring Diagram (Severe Vocational Series): 249
18.11.1.7. 12XAT: Engine or Vehicle Speed Switch - Wiring Diagram (Severe Vocational Series): 250
18.11.1.8. 12XAT: Rear Axle Ratio Switch - Wiring Diagram (Severe Vocational Series):.... 251
18.11.2. 12XAT: MEDIUM VOCATIONAL SERIES – Wiring Diagrams: 253
18.11.2.4. 12XAT: Preset Set Speed - Wiring Diagram (Medium Vocational Series):.... 254
18.11.2.5. 12XAT: Preset Resume Speed - Wiring Diagram (Medium Vocational Series):.... 255
18.11.2.6. 12XAT: Preset Set Resume Speed - Wiring Diagram (Medium Vocational Series):.... 256
18.11.2.7. 12XAT: Variable Set Resume Speed - Wiring Diagram (Medium Vocational Series):.... 257
18.11.2.8. 12XAT: Variable Pedal Control - Wiring Diagram (Medium Vocational Series):.... 258
18.11.2.9. 12XAT: Auxiliary Tachometer - Wiring Diagram (Medium Vocational Series): 259
18.11.3. 12XAT: MEDIUM VOCATIONAL SERIES – Wiring Diagrams: 261
18.12. 12XBM: ENGINE CONTROL, REMOTE MOUNTED Provision for; Includes Wiring for Body Builder Installation of PTO Controls and Starter Lockout; with Ignition Switch Control for Cummins B6.7 and L9 Engines. 263
18.12.1. 12XBM: Severe and Medium Vocational Series Vehicle Wiring Diagrams: 265
18.12.1.1. 12XBM: Preset Set Speed - Wiring Diagram:.... 265
18.12.1.2. 12XBM: Preset Resume Speed - Wiring Diagram: 266
18.12.1.3. 12XBM: Preset Set Resume - Wiring Diagram:.... 266
18.12.1.4. 12XBM: Variable Set Resume - Wiring Diagram: 267
18.12.1.5. 12XBM: Variable Pedal Control - Wiring Diagram: 267
18.12.1.6. 12XBM: Auxiliary Tachometer - Wiring Diagram: 268
18.12.1.7. 12XBM: Engine or Vehicle Speed Switch - Wiring Diagram: 268
18.12.1.8. 12XBM: Accelerator / Brake Override or Rear Axle Ratio Switch - Wiring Diagram: 269
18.12.1.9. 12XBM: Starter Lockout - Wiring Diagram:.... 269
18.13. 60AJA: BDY INTG, THROTTLE CONTROL Accommodation for Single Customer-Mounted External Engine Speed Control Switch, Programmable Mode for Various Switch Actions and Engine Speed Control Option; Useable Only While Vehicle is Stopped, and the Park Brake is Applied (requires one Remote Power Module (RPM) input).... 271
18.14. 60AJE: BDY INTG, THROTTLE CONTROL Accommodation for On Demand Engine Speed for Single Customer-Mounted Pressure Switch, Programmable Mode for Various Switch Actions, Useable Only While Vehicle is Stopped, and the Park Brake is Applied (requires one RPM input).... 275
18.15. 60AJG: BDY INTG, THROTTLE CONTROL Accommodation for Single Customer-Mounted External Engine Speed Control Switch, for Utility Applications, Programmable Mode for Various Switch Actions and Engine Speed Control Option, Only with Vehicle Stopped and Park Brake is Applied (requires one RPM input).... 279
18.16. 60AJH: BDY INTG, THROTTLE CONTROL for Dual Function Input, for Utility Applications, Remote Throttle Control When Engine is Running, and Activating Output for Emergency Power When the Engine is Not Engaged; Useable Only When Vehicle is Stopped, and Park Brake is Applied (requires one RPM input and output). 283
18.17. 60AJJ: BDY INTG, THROTTLE CONTROL Accommodation for Single Customer-Mounted Momentary Switch, for Refuse Applications, Programmable Mode Various Switch Actions, Useable Only While Vehicle is Stopped, and the Park Brake is Applied (requires one RPM input).... 287

18.18. Engine Speed Control Over Datalink: J1939 Datalink Engine Speed Control for International A26 and S13 Engines. 291
18.18.1. Preset Speed Ramping 292
18.18.2. Variable Ramping 296
18.18.3. Remote Pedal Enable Switch 300
18.18.4. Remote Pedal Engine Ramping 304
18.18.5. Engine Speed Control with TSC1 Messaging (Not available on A26) 308
18.19. Datalink Control for Split Shaft Operation: J1939 DATALINK ENGINE CONTROL for International A26 and S13 Engines 310

19. Fog, Plow, and Guide Post Accommodation Packages 314

19.1. 8585: TOGGLE SWITCH, AUXILIARY and Wiring; For Driving Lights or Fog Lights Mounted by Customer. 314
19.2. 08THJ: AUXILIARY HARNESS 3.0' for Auxiliary Front Headlights and Turn Signals for Front Plow Applications 317
19.3. 08THV: DISCONNECT, FRONT HARNESS for Guide Post Lights; Connectors Located at Headlight Connection, for Customer Installation. 320
19.4. 08TNP: AUXILIARY HARNESS 5.0' for Auxiliary Front Headlights and Turn Signals for Front Plow Applications 321
19.5. 08WLM: FOG LIGHTS {Peterson} Amber, Halogen, Rectangular. 324
19.6. 08WLN: FOG LIGHTS {Peterson} Clear, Halogen, Rectangular. 327
19.7. 08WPL: FOG LIGHTS (2) Amber, Oval, With H355W Halogen Bulb. 330
19.8. 08WPM: FOG LIGHTS (2) Clear, Oval, With H355W Halogen Bulb 333
19.9. 08XJG: FOG LIGHTS (2) Clear, Lens, Halogen, Rectangular, with White Light Source 336
19.10. 08XJH: FOG LIGHTS (2) Clear, Lens, LED, Rectangular, with White Light Source 339
19.11. 08XJJ: FOG LIGHTS (2) Selective Yellow, LED 342

20. Disable ABS/ATC for Rail Applications 345

20.1. Disabling ABS/ATC by Removing Power to Module 345
20.2. Disable ABS/ATC with Bendix ABS inputs: 346

21. Lift Axles 347

21.1. Lift Axle Control (Using Conventional Air Solenoid Module): 347
21.2. Lift Axles (Using ELAM): 352
21.3. Lift Axle Electronic Gauges: 358

22. Gauges and Fault Display 361

22.1. 16HGG: GAUGE, OIL TEMP, ENGINE 361
22.2. 16HGH: OIL TEMP GAUGE FOR AUTOMATIC TRANS 364
22.3. 16HGJ: GAUGE, OIL TEMP, MANUAL TRANSMISSION 367
22.4. 16HGL: GAUGE, OIL TEMP, REAR AXLE 370
22.5. 16HGN: GAUGE, AIR APPLICATION 374
22.6. 16HHT: GAUGE, Ammeter 150-Ampere (AMP) 377
22.7. 16HKT: IP CLUSTER DISPLAY DIAGNOSTICS — Display on board diagnostics of fault codes in gauge cluster 379
22.8. 16HLR: VIRTUAL GA, OIL TEMP, Air Application Requires Premium Cluster. 380
22.9. 16HLS: VIRTUAL GA, OIL TEMP, REAR AXLE Requires Premium Cluster. 380
22.10. 16HLU: VIRTUAL GA, OIL TEMP, AUTO XMSN for Allison Transmission, Requires Premium Cluster. 384
22.11. 16HLV: VIRTUAL GA, OIL TEMP, MANL XMSN for Manual Transmission, Requires Premium Cluster. 387
22.12. 16HLW: VIRTUAL GAUGE, OIL TEMP, ENG Requires Premium Cluster. 390

23. In Cab Battery Feed Power Source 393

23.1. 8518: CIGAR LIGHTER Includes Ash Cup. 393
23.2. 8718: POWER SOURCE Cigar Type Receptacle without Plug and Cord. 394
23.3. 08WCK POWER SOURCE, TERMINAL TYPE 2-Post. 395
23.4. 08XHR POWER SOURCE, ADDITIONAL Auxiliary Power Outlet (APO) & USB Port, Located in the Instrument Panel. 396
23.5. 08XKR: POWER SOURCE, Two Auxiliary Power Outlets (APO) and Two USB Ports, Located in the Instrument Panel. 396

24. Indicator Lights and Alarms 398

24.1. 60AJC: BDY INTG, INDICATOR LIGHTS (2) One for Gate Open and One for Rear Alert, Includes Audible Alarm, Programmable Mode for Various Switch Action (requires 2 Remote Power Module (RPM) inputs). 398

24.2. 60AJD: BDY INTG, INDICATOR LIGHTS (2) One for Boom Out of Stow, One for Outriggers Deployed, Includes Audible Alarm and Interlock to Parking Brake, Programmable Mode for Various Switch Actions (requires 2 RPM inputs). 402
24.3. 60AJK: INDICATOR LIGHTS (2), One for Body Up, One for Gate Open, Includes Audible Alarm, Programmable Mode for Various Switch Actions (Requires 2-RPM Inputs). 406
24.4. 60AKY: BDY INTG, DASH IND LT TRICOLOR (1) for Optional Usage Customer to Program. 410
24.5. 60AKZ: BDY INTG, DASH IND LT TRICOLOR (2) for Optional Usage Customer to Program. 412
24.6. 60ALA: BDY INTG, DASH IND LT TRICOLOR (3) for Optional Usage Customer to Program. 414
24.7. 60ALB: BDY INTG, DASH IND LT TRICOLOR (4) for Optional Usage Customer to Program. 417
24.8. 60ALC: BDY INTG, DASH IND LT TRICOLOR (5) for Optional Usage Customer to Program. 419
24.9. 60ALD: BDY INTG, DASH IND LT TRICOLOR (6) for Optional Usage Customer to Program. 421
24.10. 60ALE: BDY INTG, DASH IND LT TRICOLOR (7) for Optional Usage Customer to Program. 423
24.11. 60ALG: BDY INTG, DASH IND LT TRICOLOR (8) for Optional Usage Customer to Program. 425
24.12. 60ALH: BDY INTG, DASH IND LT TRICOLOR (9) for Optional Usage Customer to Program. 427
24.13. 60ALJ: BDY INTG, DASH IND LT TRICOLOR (10) for Optional Usage Customer to Program. 429
24.14. 60ALK: BDY INTG, DASH IND LT TRICOLOR (11) for Optional Usage Customer to Program. 431
24.15. 60ALL: BDY INTG, DASH IND LT TRICOLOR (12) for Optional Usage Customer to Program. 433

25. Liftgate Accommodation Packages 434

25.1. 08VBA: POWER SOURCE, SPECIAL for Customer Installed Lift Gate; 200 Amp Max, Includes 00ga. Power Cable to End of Frame, Optional Power (PDM) for Power Source, Latched Switch on Instrument Panel, with a Time Out Feature, Battery Discharge Protection, Controlling a Mag Switch Which Provides Power. 434
25.2. 08TWG: POWER SOURCE, SPECIAL {Erich Jaeger} Socket, Single Terminal, for Power Lift Gate Feed, Battery Feed Thru 150 Amp Circuit Breaker, To Operate Lift Gate On Trailer, Includes a 15' Power Cable Coiled In Cab 436
25.3. 08TWJ: POWER SOURCE, SPECIAL {Erich Jaeger} Socket, Dual Pole Terminal, for Power Lift Gate Feed, Battery Feed Thru 150 Amp Circuit Breaker, To Operate Lift Gate On Trailer, Includes a 15' Coiled Dual Pole Power Cable Shipped in Cab 438
25.4. 08WCM: POWER SOURCE, Special Socket; Single Terminal, for Power Lift Gate Feed, Battery Feed Thru 150-Amp Circuit Breaker, To Operate Lift Gate on Trailer, includes a 15-foot Power Cable Coiled in Cab. 439
25.5. 08WJA: POWER SOURCE, SPECIAL for Customer Installed Lift Gate; 200 Amp Max, Includes 2ga. Power Cable to End of Frame, Latched Switch on Instrument Panel, with a Time Out Feature, Battery Discharge Protection, Controlling a Mag Switch Which Provides Power 441
25.6. 08WJH: POWER SOURCE, SPECIAL - Special Socket; Dual Pole Terminal, for Power Lift Gate Feed, Battery Feed Thru 150-Amp Circuit Breaker to Operate Lift Gate on Trailer. 442
25.7. 08WKP: POWER SOURCE, SPECIAL {Phillips} Socket, Dual Pole Terminal, for Power Lift Gate Feed, Battery Feed Thru 150 Amp Circuit Breaker, To Operate Lift Gate On Trailer, Includes a 15' Coiled Dual Pole Power Cable Shipped in Cab 444
25.8. 08WSS: POWER SOURCE, SPECIAL {Phillips} Socket, Dual Pole Terminal, for Power Lift Gate Feed, Battery Feed Thru 150 Amp Circuit Breaker, To Operate Lift Gate On Trailer, includes a Phillips Weather-Tite M2 12' Straight Dual Pole Power Cable Shipped in Cab 445

26. Remote Power Module Features 447

26.1. 60ACE: BDY INTG, SWITCH DUAL OUTPUT 2-Position Latched Rocker, Backlit, with "ON" Indicator Mounted on Dash, for 1; Auxiliary Load 40-AMP Maximum; Power Available Only in "Ignition (IGN)" or "Accessory" Position; Controls Two Remote Power Modules (RPMs) (requires two RPM outputs). 448
26.2. 60ACG: BDY INTG, SWITCH, INTERLOCKED 2-Position Latched Rocker, Backlit, with "ON" Indicator Mounted on Dash for 1; Auxiliary Load 20-Ampere (AMP) Maximum; Output will disengage when Vehicle Exceeds 30-MPH, Programmable; Power Available Only in "Ignition (IGN)" or "Accessory" Position (requires one Remote Power Module (RPM) output). 451
26.3. 60ACH: BDY INTG, SWITCH, INTERLOCKED (2) 2-Position Latched Rockers, Backlit, with "ON" Indicator Mtd on Dash, for 2; Auxiliary Load each 20-AMP Maximum; Outputs will Disengage when Vehicle Exceeds 30-MPH, Programmable; Power Available Only in "IGN" or "Accessory" Position (requires two RPM outputs). 455
26.4. 60ACS: BDY INTG, SWITCH MOMNTRY 3POS Rocker, Backlit, with "ON" Indicator Mounted on Dash, Latching Software, for 1 Auxiliary Load 20-amp. Maximum; Power Available Only in "Ignition" or "Accessory" Position, Output Also Controlled by a Customer Remote Mounted Switch (requires 1 Remote Power Module input and 1output). 461
26.5. 60ACT: BDY INTG, SWITCH MOMNTRY 3POS Rocker, Backlit, with "ON" Indicator Mounted on Dash, Latching Software, for 2; Auxiliary Load 20-AMP Maximum; Power Available Only in "IGN" or "Accessory" Position, Output Also Controlled by a Customer Remote-Mounted Switch (requires two RPM inputs and two outputs). 464
26.6. 60ACU: BDY INTG, SWITCH MOMNTRY 3-POS (3) Rocker, Backlit, with "ON" Indicator Mounted on Dash, Latching Software, for 3; Auxiliary Load 20-AMP Maximum; Power Available Only in

"IGN" or "Accessory" Position, Output Also Controlled by a Customer Remote-Mounted Switch (requires three RPM inputs and three outputs). 468
26.7. 60AJL: BDY INTG, REMOTE POWER MODULE Mounted Inside Cab; Up to 6-Outputs & 6 Inputs, Max. 20-AMP per Channel, Max. 80-AMP Total; (Includes 1-Switch Pack with Latched Switches). 473
26.8. 60AJM: BDY INTG, REMOTE POWER MODULE (2) Mounted Inside Cab; Up to 6- Outputs & 6-Inputs each, Max. 20-AMP per Channel, Max. 80-AMP Total; (Includes Switch Packs with Latched Switches). 479
26.9. 08SAJ: SWITCH, BODY CIRCUITS, MID for Body Builder; 12-Momentary Switches in IP, With Two Power Modules with Six Channels, 20-AMP Max. per Channel, 80-AMP Max. Output, Switch Control Power Modules through Multiplex Wiring, Mounted on Battery Box, BOC. 484
26.10. 08VZR: SWITCH, BODY CIRCUITS, MID for Bodybuilder, 6-Switches in Instrument Panel; One Power Module with 6 Channels, 20-Amp Max. Per Channel, 80 Amp Max Output, Switches Control Power Module Through Multiplex Wiring, Mounted in Cab Behind Driver Seat. 490
26.11. 08VZS: SWITCH, BODY CIRCUITS, MID for Bodybuilder, 12-Switches in Instrument Panel; Two Power Modules with 6 Channels, 20-Amp Max. Per Channel, 80-Amp Max Output, Switches Control Power Module Through Multiplex Wiring, Mounted in Cab Behind Driver Seat. 495
26.12. 08WSK: SWITCH, BODY CIRCUITS, REAR for Body Builder; With Six Momentary Switches in Instrument Panel (IP); One Power Module, With Six Channels, 20-Ampere (AMP) per Channel and 80 AMP Max. Output, Switches Control the Power Modules through Multiplex Wiring, Mounted at Rear on Frame. 501
26.13. 08WSM: SWITCH, BODY CIRCUITS, MID for Body Builder, With Six Momentary Switches in IP; One Power Module with Six Channel, 20-AMP Max. per Channel and 80 AMP Max. Output, Switches Control the Power Module through Multiplex Wiring, Mounted Battery Box, Back of Cab (BOC). 506
26.14. 60AAA: BDY INTG, RPM Mounted Under Cab; Up to Six Outputs and Six Inputs, Max. 20-AMP per Channel, Max. 80-AMP Total (Includes One Switch Pack with Latched Switches) Mounted on Battery Box, BOC. 510
26.15. 60AAB: BDY INTG, RPM (2) Mounted Under Cab; Up to Six Outputs and Six Inputs Each, Max. 20 AMP per Channel, Max. 80 AMP Total per Power Module (Includes Switch Packs with Latched Switches) Mounted on Battery Box, BOC. 515
26.16. 60AAD: BDY INTG, RPM (2) {SPECIAL} Mounted Under Cab or on Battery Box; Max. 20-AMP per Channel, Max. 80-AMP Total per Power Module; Includes One Module with Switch Pack Containing Six Latched Switches and One Module with Hardware Only. 521
26.17. 60AAG: BDY INTG, RPM Mounted Inside Cab behind Driver Seat; Max. 20-AMP per Channel, Max. 80-AMP Total; Includes One Module with Switch Pack Containing Latched Switches. 526
26.18. 60AAH: BDY INTG, RPM (2) Mounted Inside Cab behind Driver Seat; Max. 20-AMP per Channel, Max. 80-AMP Total; Includes Two Modules with 2-Switch Packs Containing Latched Switches. 531
26.19. 60AAJ: BDY INTG, RPM (3) Mounted Inside Cab behind Driver Seat; Max. 20-AMP per Channel, Max. 80-AMP Total; Includes Three Modules with 3-Switch Packs Containing Latched Switches. 537
26.20. 60AAK: BDY INTG, RPM (2) {SPECIAL} Mounted Inside Cab behind Driver Seat; Max. 20-AMP per Channel, Max. 80-AMP Total; Includes One Module with Switch Pack Containing Six Latched Switches and One Module with Hardware Only. 545
26.21. 60AAL: BDY INTG, RPM {SPECIAL} Mounted Inside Cab behind Driver Seat; Max. 20-AMP per Channel, Max. 80-AMP Total; Includes Three Modules with Hardware Only. 550
26.22. 60AAM: BDY INTG, RPM AUX Mounted on the Driver's Side Frame Rail at Rear of Frame; Up to 6-Outputs and 6-Inputs, Max. 20-AMP per Channel, Max. 80-AMP Total. 551
26.23. 60AAN: BDY INTG, RPM AUX Mounted Back of Cab; Up to 6-Outputs and Inputs, Max. 20-AMP per Channel, Max. 80-AMP Total 552

27. Power Window, Locks, Remote Keyless Entry 553

27.1. 16VCN: KEYLESS ENTRY SYSTEM REMOTE with Panic and Auxiliary Work Light Function, Includes One Key Fob (Transmitter). 553
27.2. 16VCP: KEYLESS ENTRY SYSTEM REMOTE with Panic and Horn Beep Lock Confirmation, with Auxiliary Button for Work Light, Includes One Key Fob (Transmitter). 556
27.3. 16WJU: WINDOW, POWER (2-Door) and Power Locks, Left and Right Doors. 560
27.4. 16WJV: WINDOW, POWER (4-Door) and Power Door Locks, Front and Rear Doors, Left and Right. 563
27.5. 16WKZ: KEYLESS ENTRY SYSTEM REMOTE with Panic and Auxiliary Buttons, Includes One Key Fob (Transmitter). 565

28. Productivity Features 569

28.1. 08THN: TURN SIGNAL SWITCH with Hazard Flasher Overrides Brake, to be done With Programming System Controller. 569
28.2. 08WXB: HEADLIGHT WARNING BUZZER Sounds When Head Light Switch is on, and Ignition Switch is in "Off" Position. 570

28.3. 08WXD: ALARM, PARKING BRAKE Electric Horn Sounds in Repetitive Manner when Vehicle Park Brake is “NOT” Set, With Ignition (IGN) “OFF” and any Door Open. 571
28.4. 16HCK: SEATBELT WARNING PREWIRE for 1 to 3 Belts. 573
28.5. 16HCL: SEATBELT WARNING PREWIRE for 4 to 6-Belts..... 574

29. Remote Start/Stop Features 575

29.1. 08XRX: ENGINE SHUTDOWN CUSTOMER INSTALL SWITCH. 575
29.2. 60ABC: BDY INTG, REMOTE START/STOP to Start and Stop Vehicle Engine. 579
29.3. 60ABD: BDY INTG, REMOTE START/STOP To Start and Stop Vehicle Engine, Will Start Emergency Pump Motor, Programmable Time Intervals..... 583

30. Secondary Road Speed Limit..... 587

30.1. Datalink Control for Secondary Road Speed Limit Control: J1939 DATALINK ENGINE CONTROL for Navistar A26 Engines..... 587

31. Standard electrical Offerings 590

31.1. 08WRB: HEADLIGHTS ON W/WIPERS Headlights Will Automatically Turn on if Windshield Wipers are turned on. There are two functions, Lights on With Wipers (LOWW) and Day Time Running Lights (DTRL), available with this sales code. 590

32. Theft Deterrent 591

32.1. 60ACX: BODY INTG, THEFT DETERRENT SYS Includes one (1) Switch Pack of Six Switches. 591

33. PTO (Power Take OFF) and PTO Hour Meter (Not T14 Transmission) 594

33.1. 13TLR: PTO, SPLIT SHAFT {NAMCO Model 463-A-SPSSXS-Y-362} Power Tower Above Rail Provides a Power Source for Customer Equipment, PTO Ratio 1:1 w/Driveline; Upper Front PTO Output Decouplable; Upper Rear PTO Output Non-Decouplable; Case Hardened Helical Gears; Lube Pump, Requires Customer Mounted External Cooler System 509 BTU/Min Minimum Capacity..... 594
33.2. 13WDN: PTO CONTROL, DASH MOUNTED for Customer Provided PTO; Includes 2-Independent Illuminated Switches, 2-Electric/Air Solenoids, Piping and Wiring..... 596
33.3. 13XAA : PTO CONTROL, DASH MOUNTED for Customer Provided PTO; Includes Switch, Electric/Air Solenoid, Piping and Wiring..... 618
33.3.1. 13XAA PTO CONTROL, DASH MOUNTED for Customer Provided PTO; Includes Switch, Electric/Air Solenoid, Piping and Wiring..... 618
33.3.2. 13XAA PTO CONTROL, DASH MOUNTED for Customer Provided PTO; Includes 1- Illuminated Switch, 1-Electric/Air Solenoid, Piping and Wiring. 626
33.4. 13XAB: PTO CONTROL, DASH MOUNTED For Customer Provided PTO on Transfer Case; Includes Switch, Electric/Air Solenoid, Piping and Wiring 639
33.5. 16WLM: HOUR METER, PTO for Customer Provided PTO; Indicator Light and Hour meter in Gauge Cluster Includes Return Wire for PTO Feedback Switch. 642
33.6. 60ABA: BDY INTG, PTO ACCOMMODATION for Monitoring Cable Shift Engaged PTO, With Indicator Light and Audible Alarm in Gauge Cluster (requires one Remote Power Module (RPM) input)..... 646
33.7. 60ABB: BDY INTG, PTO ACCOMMODATION for Muncie Lectra-Shift PTO Engagement and Disengagement, With Switch Mounted on Dash; Includes Indicator Light and Audible Alarm in Gauge Cluster (requires one RPM input and one output). 650
33.8. 60ABE: BDY INTG, PTO ACCOMMODATION for Electric over Hydraulic PTO, With Switch Mounted on Dash, Includes Audible Alarm, and Indicator Light in Gauge Cluster (Requires one RPM input and one output). This feature does Not Include Solenoids. 660
33.9. 60ABK: BDY INTG, PTO ACCOMMODATION. Accommodation for Electric over Air, Non-Clutched PTO Engagement and Disengagement does not Include Air Solenoid, With Switch Mounted on Dash, Includes Audible Alarm, and Indicator Light in Gauge Cluster (requires one RPM input and one output)..... 670
33.10. 60ABL: BDY INTG, PTO ACCOMMODATION. Accommodation for Electric over Air, Clutched PTO Engagement and Disengagement, does not Include Air Solenoid, With Switch Mounted on Dash, Includes Audible Alarm, and Indicator Light in Gauge Cluster (requires one RPM input and one output)..... 680
33.11. 60AKG: BDY INTG, PTO ACCOMMODATION for (3) Latched Rocker Switches, (1) PTO Switch, (2) Generic Switches to Control (3) 30-amp relays, with Programmable Interlocks, for Body Builder Hook up in the Engine Compartment Left Side, Recommended for Automatic Transmissions..... 689

34. International® T14 Transmission Features 701

34.1. PTO With International® T14 Transmission with Transmission Mounted PTOs..... 701
34.2. 60AME T14 Split Shaft PTO Customer provided Transfer Case..... 716

34.3. 13WME MANEUVERING MODE 721
13WME MANEUVERING MODE Maintains Low Speed Throttle Control to Reduce Harsh Driveline Engagement/Disengagement, Enables Slow & Steady Trailer Hook up, Docking & Tight Space Driving, Includes Switch, for T14 Transmission. 721
34.4. 13WMU/13WMV T14 Neutral Force/Hold 721
34.5. 13WMZ T14 Paver Assist 722
34.6. 60AMB T14 PTO Inhibit 723
34.7. 60AMG T14 Transmission Range Limiter 726

35. Eaton® Transmissions Integration Features 729

35.1. Eaton® Ultrashift™ Transmission PTO Feedback 729
35.2. Eaton® Procision™ Transmission 730
13WEP: WIRING, TRANS, BODY BUILDER Installed Wiring and Connector for Transmission/PTO Controls, for Eaton® Procision™ Transmission. 730
13WEW: WIRING, TRANSMISSION Installed Wiring and Connector for Transmission/PTO Controls, for Eaton® Endurant™ Transmission. 732
35.3. Eaton® Endurant™ Transmission Split-Shaft Feature Codes 736

Refer to Endurant XD Series PTO Installation and Body Integration Guide TRIG2620 EN-US 737

35.4. 13WMJ ROCK-FREE OPERATIONAL MODE Eaton® Endurant™ Rock-Free Feature Code 738

Refer to Endurant XD Series PTO Installation and Body Integration Guide TRIG2620 EN-US 739

36. Allison 1000 and 2000 Transmission Spare Input/Output (I/O) and Sales Codes 741

36.1. 13WDH Description: WIRING, TRANS BODY BUILDER Installed Wiring for Transmission/PTO Controls, for Allison 2000, 2100, 2200, 2400, 2500 Series Transmission Only 741
36.2. 13XAC: ALLISON SPARE INPUT/OUTPUT for Rugged Duty Series (RDS), General Purpose Trucks, Package Number 354, Modified for Single Input Auto Neutral. 744

37. Allison 3000 and 4000 Transmission Auto Neutral 746

37.1. 13AAZ: AUTOMATIC NEUTRAL Allison 3000 & 4000 Series Transmission Shifts to Neutral When Parking Brake is Engaged. 746
37.2. 13WEH: AUTOMATIC NEUTRAL Allison WT Transmission Shifts to Neutral When Parking Brake is Engaged and Remains in Neutral When Parking Brake is Disengaged, without On/Off Switch. 747
37.3. 13WUA: ALLISON NEUTRAL Allison WT Transmission Shifts to Neutral When Parking Brake is Engaged and Remains on Neutral When Park Brake is Disengaged. 750

38. Allison 3000 and 4000 Transmission Spare Input/Output (I/O) and Sales Codes 752

38.1. 13WUB: ALLISON SPARE INPUT/OUTPUT for Highway Series (HS); General Purpose Trucks. Package number 223 756
38.2. 13WUC: ALLISON SPARE INPUT/OUTPUT for Rugged Duty Series (RDS); General Purpose Trucks, Construction. 759
38.3. 13WUD: ALLISON SPARE INPUT/OUTPUT for Emergency Vehicle Series (EVS); Rescue, Ambulance. 762
38.4. 13WUE: ALLISON SPARE INPUT/OUTPUT for Emergency Vehicle Series (EVS); Fire/Pumper, Tank, Aerial/Ladder. 765
38.5. 13WUH: ALLISON SPARE INPUT/OUTPUT for Rugged Duty Series (RDS); Airport Refueler, Sewer Evac. 768
38.6. 13WUJ: ALLISON SPARE INPUT/OUTPUT for Rugged Duty Series (RDS); Front Loaders, Rear Loaders, Recycling/Packer Trucks. 771
38.7. 13WUK: ALLISON SPARE INPUT/OUTPUT for Rugged Duty Series (RDS); Side Loaders. 774
38.8. 13WUL: ALLISON SPARE INPUT/OUTPUT for Rugged Duty Series (RDS); Street Sweeper. 778
38.9. 13WUN: ALLISON SPARE INPUT/OUTPUT for Motorhome Series (MH), Package Number 226 781
38.10. 13WUR: ALLISON SPARE INPUT/OUTPUT for Rugged Duty Series (RDS); Dump/Construction with Two-Speed Axle or Auxiliary Transmission, Package Number 146 784
38.11. 13WUS: ALLISON SPARE INPUT/OUTPUT for Rugged Duty Series (RDS); General Purpose Trucks Modified for Single Input Auto Neutral. 786
38.12. 13WUT: ALLISON SPARE INPUT/OUTPUT for Emergency Vehicle Series (EVS); Without Split Shaft PTO. 790
38.13. 13WUV: ALLISON SPARE INPUT/OUTPUT for Highway Series (HS); General Purpose Trucks Modified for Single Input Auto Neutral. 793
38.14. 13WUY: ALLISON SPARE INPUT/OUTPUT for Oil Field Series (OFS), Package Number 193 796
38.15. 13WUZ: ALLISON SPARE INPUT/OUTPUT for Emergency Vehicle Series (EVS), Fire/Pumper, Tank, Aerial/Ladder, Package Number 198, Includes J1939 Based Auto Neutral. 798
38.16. 13WVA: ALLISON SPARE INPUT/OUTPUT for Emergency Vehicle Series (EVS), 303/360 Includes J1939 Based Auto Neutral; Fire/Pumper, Tank, Aerial/Ladder. 803

38.17. 13WVB: ALLISON SPARE INPUT/OUTPUT for Emergency Vehicle Series (EVS), Rescue, Ambulance, Package Number 170, Includes J1939 Based Auto Neutral. 805
38.18. 13WVX: ALLISON SPARE INPUT/OUTPUT for Rugged Duty Series (RDS), On/Off Highway, Package Number 235..... 808

39. FEPTO/REPTO..... 812

39.1. Non S13 Integrated FEPTO/REPTO 812
39.2. S13 Integrated FEPTO/REPTO..... 813

40. Auxiliary Transmission..... 816

41. Work Light and Outside Cab Power Features 820

41.1. 08TMH: SWITCH, AUXILIARY Accessory Control; for Wiring in Roof, With Maximum of 20 AMP Load with Switches in the Instrument Panel. 820
41.2. 08WEX: AUXILIARY HARNESS for Auxiliary Power Source; 30-Amp, Key Switched, 2-Pin Connector, Located on Floor Between Seats. 821
41.3. 08WGV: WORK LIGHT WIRING for (2) Customer Installed Work Lights, Mounted on Top Rear Corners of Cab, with Switch on Dash, Switch Will Also Activate Standard Work Light 822
41.4. 08WJE: WORK LIGHT WIRING for (2) Customer Installed Work Lights, Mounted on Top Rear Corners of Cab, with Switch on Dash, Switch Will Also Activate Standard Work Light and Backup Lights when Vehicle is in Reverse or Park Brake Applied. 826
41.5. 08WJZ: WORKLIGHT ON W/BACKUP Work Lights will Activate when Vehicle is in Reverse 830
41.6. 08WTT: SWITCH, TOGGLE, FOR WORK LIGHT Lighted; on Instrument Panel and Wiring Effects for Customer Furnished End of Frame Light..... 833
41.7. 08XBK: SWITCH, AUXILIARY Switch 40-AMP Circuit for Customer Use; Includes Wiring Connection in the engine compartment near the mega-fuse..... 836
41.8. 08XBM: TOGGLE SWITCH, AUXILIARY (1) with One 30-Amp Circuit Breaker..... 838
41.9. 08XBN: TOGGLE SWITCH, AUXILIARY (2) with Two 30-Amp Circuit Breakers. 838
41.10. 08WAA: WORK LIGHT (LED); Pedestal Mounted with Switch on Instrument Panel (Truck Lite 81 Series). 840
41.11. 08WJZ: WORKLIGHT ON W/BACKUP Work Lights will Activate when Vehicle is in Reverse 844
41.12. 08WTT: SWITCH, TOGGLE, FOR WORK LIGHT Lighted; on Instrument Panel and Wiring Effects for Customer Furnished End of Frame Light..... 846
41.13. 08WEX: AUXILIARY HARNESS for Auxiliary Power Source; 30-Amp, Key Switched, 2-Pin Connector, Located on Floor Between Seats. 849
41.14. 08WLL: WORK LIGHT; Pedestal Mounted with Switch on Instrument Panel (Truck Lite 81 Series)..... 850
41.15. 08WMA: SWITCH, TOGGLE, FOR WORK LIGHT Lighted; on Instrument Panel and Wiring Effects for Customer Furnished Back of Cab Light. 855
41.16. 08WXN: WORK LIGHT (2) (Grote) 60 Series, Mounted Under Hood One Each Side. 859
41.17. 08XBK: SWITCH, AUXILIARY Switch 40-AMP Circuit for Customer Use; Includes Wiring Connection in the engine compartment near the mega-fuse..... 862

42. Appendix - General Electrical Section:..... 864

42.1. J1939 HIGH SPEED DATA LINK (SAE J1939/15) 864
42.2. Wire Splicing and Termination - Standard Terminals and Splices:..... 865
42.3. Using Additional Batteries on a Vehicle. 873
42.4. “Red Gel Coating” Removal from Starter Studs and Electrical Connections 873
42.5. Connecting to 12 Volt Circuits 880
42.6. Recommended Circuit Protection..... 880
42.7. Color Code System for International® Truck Wiring: 882
42.8. Electrical Components Commonly Used by Equipment Installers: 883
42.9. Suppression..... 883
42.10. Welding Information 884
42.11. Routing Guidelines..... 884
42.12. HIGH VOLTAGE CIRCUITS (GREATER THAN 50 VOLTS) ON INTERNATIONAL® TRUCKS AND BUSES:..... 885

1. Revision Summary Table

REVISION	DATE	SECTION	CHANGE DESCRIPTION	REASON FOR CHANGE	REVISED BY
01	5/03/2018	ALL	INITIAL DRAFT	INITIATION OF DOCUMENT	J. BISSONTZ
02	11/30/2018	SEVERAL	AMENDMENT OF INITIAL DRAFT	UPDATE FOR ACCURACY	J. BISSONTZ
03	1/23/2019	16.1.	ADD SECTION ON STATIONARY DATALINK ENGINE SPEED CTRL	UPDATE FOR ACCURACY	J. BISSONTZ
04	12/23/2020	30	NEW SECTION ADDED	NEW FEATURE	D. MARKS
05	02/10/2021	SEVERAL	Updated	UPDATE FOR ACCURACY	Schnellenberger
06	05/24/2022	SEVERAL	Add Steering Wheel Switch	NEW FEATURE	Schnellenberger
07	11/01/2024	SEVERAL	S13 and T14 support	NEW ENGINE AND TRANSMISSION FEATURES	Schnellenberger
08	11/01/2024	SEVERAL	Incorporated HX Integration Guide	Reduce number of Integration Guides	Schnellenberger
09	11/01/2024	SEVERAL	Added New TMC Features	TMC Features Added	Schnellenberger
10	11/01/2025	SEVERAL	Added Reference for ERPM and New features for the T14	New features	Schnellenberger
11	01/29/2026	SEVERAL	Correct 08HAB and 08HAE	Correction	Schnellenberger
12	04/14/2026	42.9	Added BCM and RPM to Suppression	Addition	Schnellenberger
13	06/12/2026	SEVERAL	Improved RP1226 Documentation	Improvement	Schnellenberger
14	08/20/2036	SEVERAL	Added Allison TCM 24 volt and T14 Split Shaft	Addition	Schnellenberger

2. Forward:

WARNING - This manual includes a diverse set of truck chassis system and subsystem integration features which contain the potential for both simple and complex operational situations and interactions when integrated in combination with a truck chassis and truck mounted equipment. It is the responsibility of persons performing truck chassis and, or truck mounted equipment system integration and testing to fully understand the plurality of operational outcomes and take the appropriate as well as necessary precautions to avoid property damage, personal injury up to and including death when performing system integration and, or test in association with the content of this document.

Note - In this manual, International® provides information about its different products to assist those who wish to modify these products for individual applications. International® does not recommend or approve any firm nor make any judgements on the quality of the work performed by a particular firm. Individuals who use the services of a Body Builder must satisfy themselves to the quality of the work.

The party installing a body, a fifth wheel, any other equipment, or making any modifications to complete the vehicle for delivery and make it road-ready is responsible to see that the completed vehicle complies with all applicable certification procedures and safety standards, as may be set forth in Federal, State, and local statutes, rules and regulations.

Specifications, descriptions, and illustrative material in this literature are as accurate as known at time of publication but are subject to change without notice. Illustrations are not always to scale and may include optional equipment and accessories but may not include all standard equipment.

Safety Information:

IMPORTANT - Read the following before starting the service procedure.

You must follow your company’s safety procedures when you service or repair equipment. Be sure to understand all procedures and instructions before you begin work on the unit. Some procedures require the use of special tools for safe and correct service. Failure to use these special tools when required can cause injury to service personnel or damage to vehicle components.

DISCLAIMER: INTERNATIONAL® DOES NOT TAKE ANY RESPONSIBILITY FOR CUSTOMER OR BODY BUILDER WIRING.

Note: Aftermarket installed wiring must comply with the following guidelines:

1. Sealed switches and connectors must be used for switches and connections that are exposed to the weather or to salt spray emanating from the vehicle's tires.

2. Route and clip wiring to minimize chafing and exposure to weather. Use conduit, loom, and/or tape to achieve this.

3. Fuse all power leads as close to the power source as possible. Remember fuses protect the wiring - size fuses accordingly.

4. All ground connections that will be made to the frame or body must be connected to clean bare metal. Remove all dirt, paint, grease, and rust that would insulate the terminal from ground. After connecting the ground, seal the connection with a good quality grease or surface sealant to protect the connection from corrosion.

5. Spliced wires should be twisted together and soldered. Use a heat shrink tube with a meltable inner wall to seal the connection. Do not expose splices to the weather.

WARNING - To avoid serious personal injury, possible death, or damage to the vehicle, make sure the transmission is in neutral, parking brake is set, and the wheels are blocked before undertaking service procedures. In addition, turn off the engine when you leave the vehicle. Never leave the vehicle unattended with the engine running.

WARNING - To avoid personal injury, possible death, or damage to the vehicle when adding electrical features, disconnect batteries. Reconnect batteries when installation is complete.

When disconnecting battery terminals, always disconnect the ground terminal first. When reconnecting, always connect the ground terminal last.
To prevent injury to the eyes, face, limbs, and body, it is imperative that lighted materials, flames, or sparks be kept away from the vent openings of the battery. The gas mixture in the battery cells, which escapes through the vents, could ignite and/or cause an explosion. This is particularly true when jumper cables are being used.
In addition, inhaling of gas produced by the normal operation of the battery could result in partial or permanent damage to the respiratory system.
Always wear eye protection when working around batteries. Do not attempt to jump-start a vehicle having a frozen battery because the battery may explode. If a frozen battery is suspected, examine all fill vents on the battery. If ice can be seen, do not attempt to start with jumper cables as long as the battery remains frozen. Thaw out the battery and recharge.
Do not check battery condition by shorting (flashing) across terminals.
Warning - Failure to observe these instructions could result in personal injury and/or damage to the vehicle.

Battery cable terminals must be clean and tight. Use hot water and common baking soda for removing terminal corrosion and for cleaning the top of the battery. Brighten the contact surface with steel wool, apply a light coat of lubricant sealing grease such as Fleetrite ® 472141-C1 or equivalent and reassemble. Be sure the terminals are clamped tightly, and that the battery is clamped securely in place.

When working around the terminals and battery, use extra care to avoid shorting. A good practice is to insulate pliers and screwdrivers.

3. Vehicle Architectures:

3.1. Multiplexing Architecture:

Unlike the electrical systems on older models, which utilize point-to-point wiring for all input signals and output loads, this system uses multiplexing technology to provide control and communication between major functional areas of the vehicle. Multiplexing simply means communicating multiple pieces of information via a single twisted pair of wires (called the data link) without requiring a wire for each piece of information. This information could be gauge information such as engine oil pressure, or switch information that controls vehicle functions such as headlamps.

The electrical system relies on a collection of electronic circuit modules and software to perform vehicle functions instead of implementing similar features using complex wire harness designs with electromechanical relays and switches. These electronic module components are connected by data links. The data links can be thought of as computer networks that allow the electronic components on the vehicle to communicate with one another.

The concept of multiplexing is not new, since data links for communicating between engine controllers, the instrument cluster and the diagnostic connector have been used for several years.

The goal of multiplexing is to reduce cab harness wiring and to simplify circuits. This is accomplished by using a low current data link for communicating between cab switches, the Body Controller, and the Instrument Cluster. Other data links in the vehicle allow other electrical controllers, the BCM and the Instrument Cluster to communicate with each other.

3.2. Vehicle Multiplex Architecture

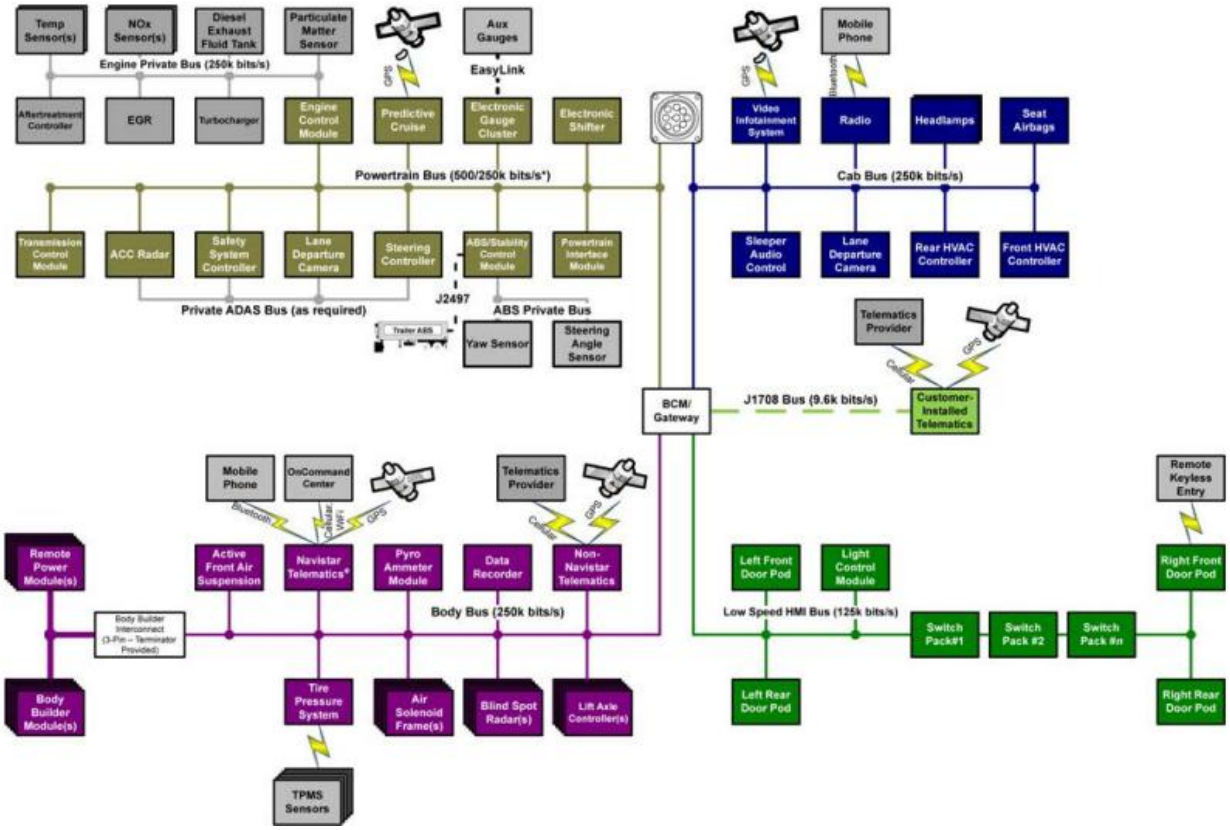

Vehicle Multiplex Architecture

3.3. Vehicle Power Distribution Architecture:

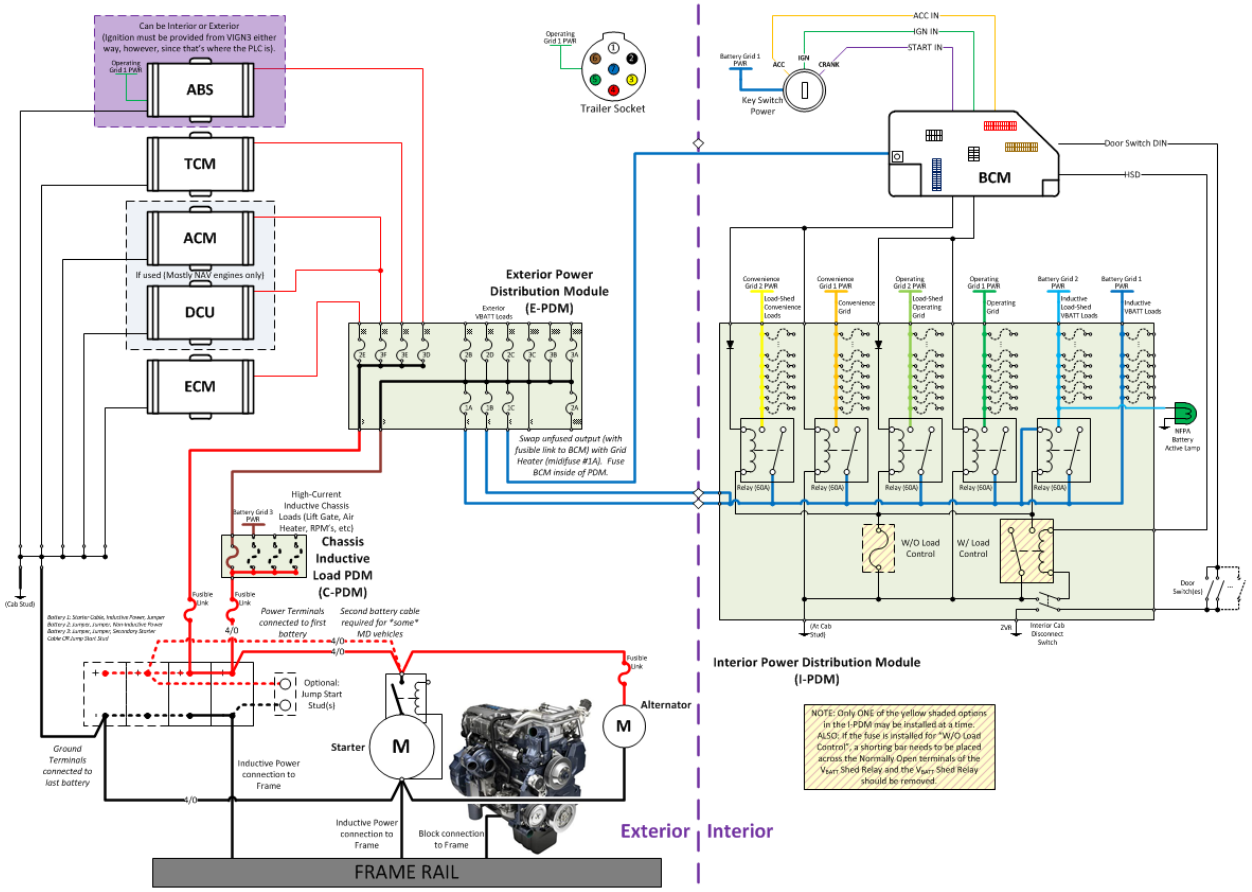

Vehicle Power Distribution Architecture

4. Body Control Module (BCM)

4.1. Body Control Module Gen IV:

At the center of the Diamond Logic® Electrical System is the Body Control Module (BCM). The BCM is an electronic module that provides multiple analogs and switched input/output interfaces to monitor vehicle sensors and control vehicle functions through solid state switches, relay driver outputs, and serial data communications. Serial datalinks connected to the BCM include the following:

The BCM is located under the IP behind a kick plate to the left of the driver's left foot. All connections are now located inside the cab except for the power connection that passes thru the dash panel to the engine compartment. The BCM receives battery power from the maxi-fuse block and Ignition (IGN) power from the IP harness.
The Body Controller communicates with plurality of modules over a series of differing baud rate data links in an exchange of tens of thousands of digital messages ever second. It also receives input from various sensors and hard wire inputs throughout the truck. The BCM converts these inputs, in accordance with the programmed "rules," into data to be transmitted on the datalinks. It is also the power source for circuits that feed the components, controlled by the multiplexed switches, inside and outside of the cab. The primary vehicle software programming resides in the BCM.

Body Control Module Gen IV (Connector Header View):

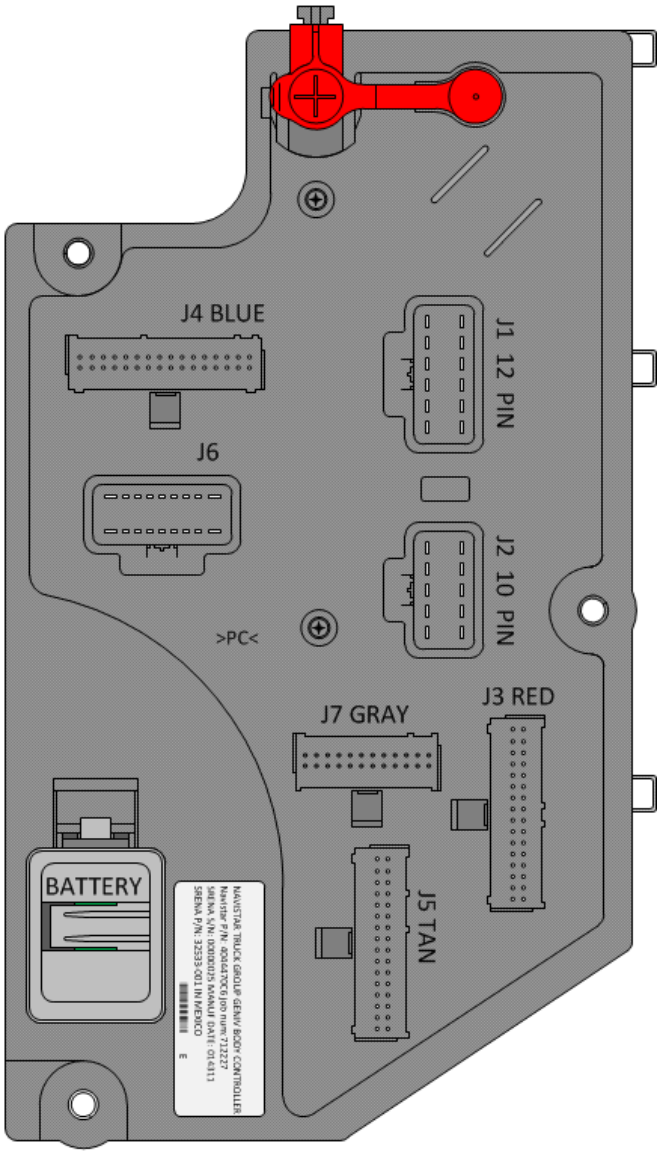

Body Controller Gen IV Part Information:

PART NUMBER	DESCRIPTION
4044470C6	BODY CONTROL MODULE GEN IV

Body Control Module Part Number

4.2. Body Control Module “Real-time Clock” Internal Power Source:

Note: Within the body control module is an internal power cell which powers the module’s internal “real-time clock” during times when there is insufficient electrical potential available from the main chassis battery electrical architecture to fully support the body control module’s full electrical and operational requirements. Over time this internal power cell will discharge and will require replacement. The body control module’s original internal power cell is integral to the control module and is permanently mounted on the main printed circuit board and is not intended to be a serviceable component. However, positioned next to the original internal power cell is a 2-way electrical connector which is in parallel with, but diode blocked from the original internal power cell. A new internal power cell module assembly can be added by pinning it into the 2-way printed circuit board mounted mating connector to restore the internal power cell operation. The replacement internal power cell module is packaged in the form of a new body control module battery cover which includes a new power cell as well as a printed circuit board mounted to the underside/interior of the new body control module battery cover. Once the new internal power cell has been connected to the printed circuit board mounted mating connector, the module assembly will replace the body control module’s original plastic battery cover.
When the body controller’s internal power cell becomes discharged a fault code can be accessed through either the gauge cluster’s diagnostic display or through the Navistar® Diamond Logic Builder® service tool. The fault code suspect parameter number will be displayed as SPN:516824 and have the diagnostic fault code name, “RTC Battery”.

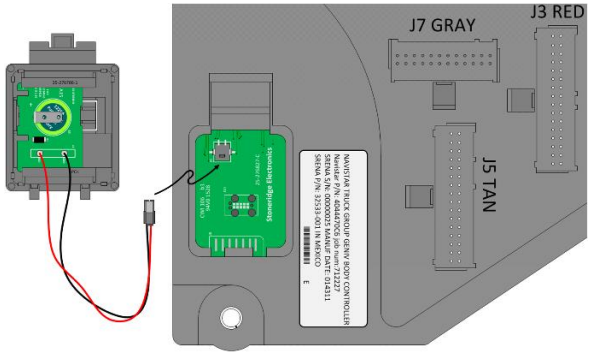

Replacement Internal Power Cell

Body Controller Internal Power Cell – Uninstalled View:

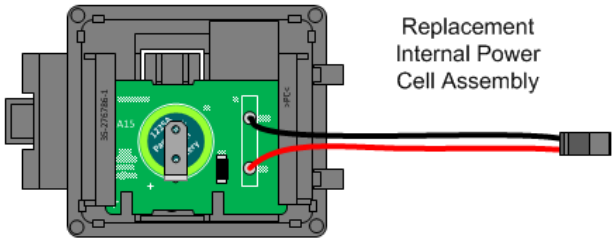

Body Controller Gen IV Replacement Battery Part Information:

PART NUMBER	DESCRIPTION
2514328C91	BODY CONTROL MODULE REPLACEMENT BATTERY (INTERNAL POWER CELL ASSEMBLY)

Body Control Module Internal Battery Part Number

4.3. Body Control Module Gen IV Connector Composite:

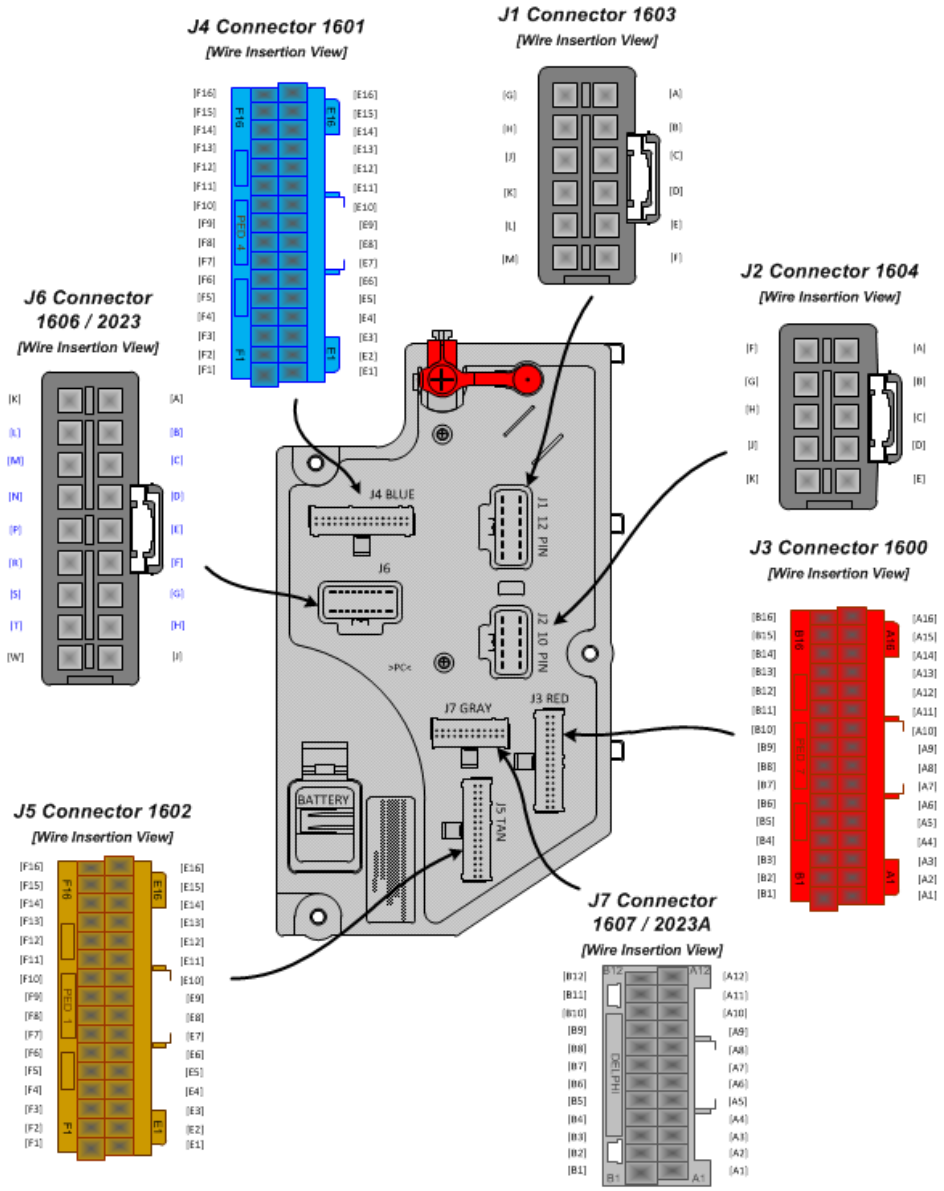

Body Controller Gen IV Connector Composite

4.4. Body Controller J1 Connector 1603 I/O & Part Number Detail:

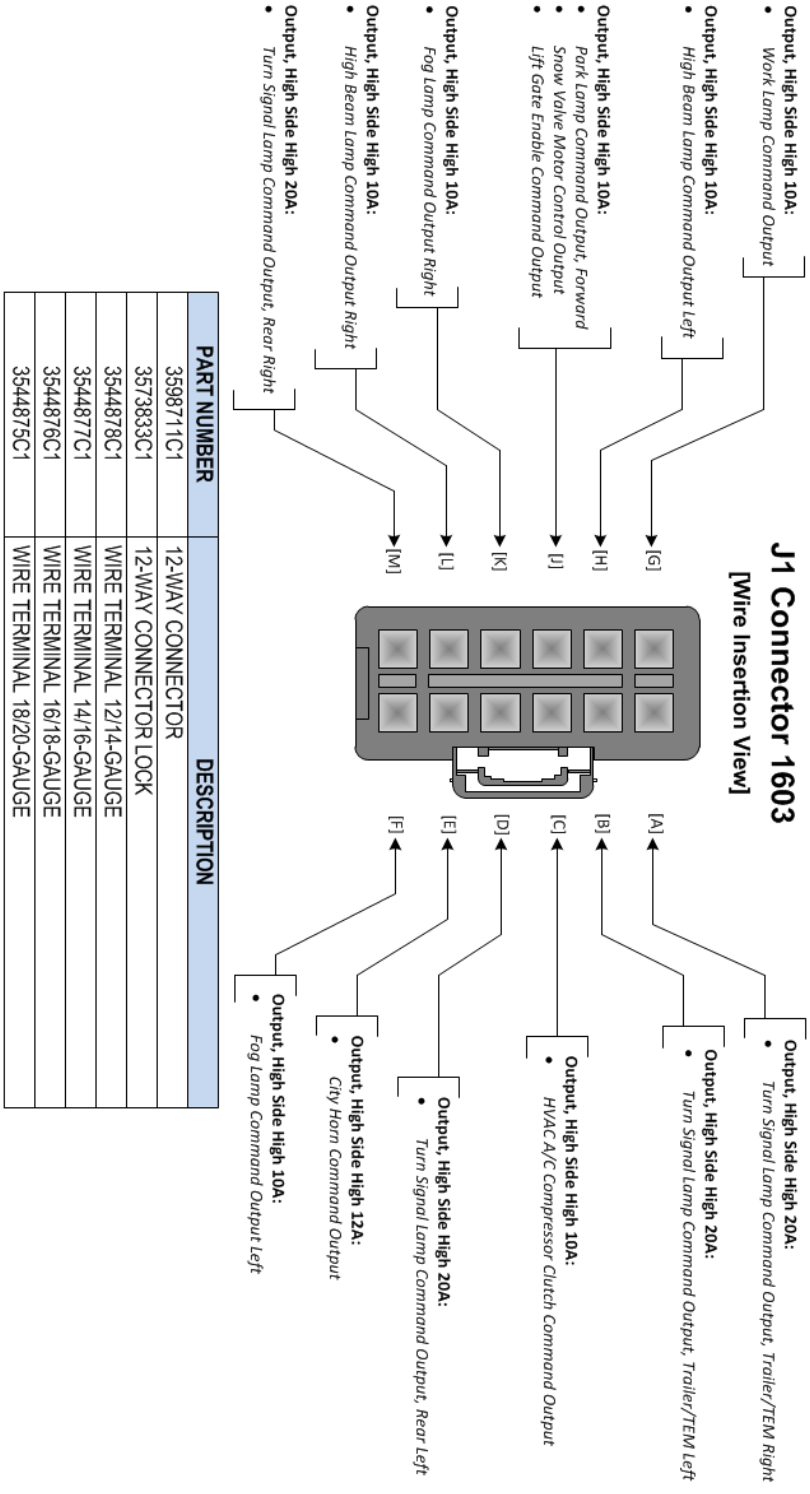

PART NUMBER	DESCRIPTION
3598711C1	12-WAY CONNECTOR
3573833C1	12-WAY CONNECTOR LOCK
3544878C1	WIRE TERMINAL 12/14-GAUGE
3544877C1	WIRE TERMINAL 14/16-GAUGE
3544876C1	WIRE TERMINAL 16/18-GAUGE
3544875C1	WIRE TERMINAL 18/20-GAUGE

J1 Connector 1603

4.5. Body Controller J2 Connector 1604 I/O & Part Number Detail:

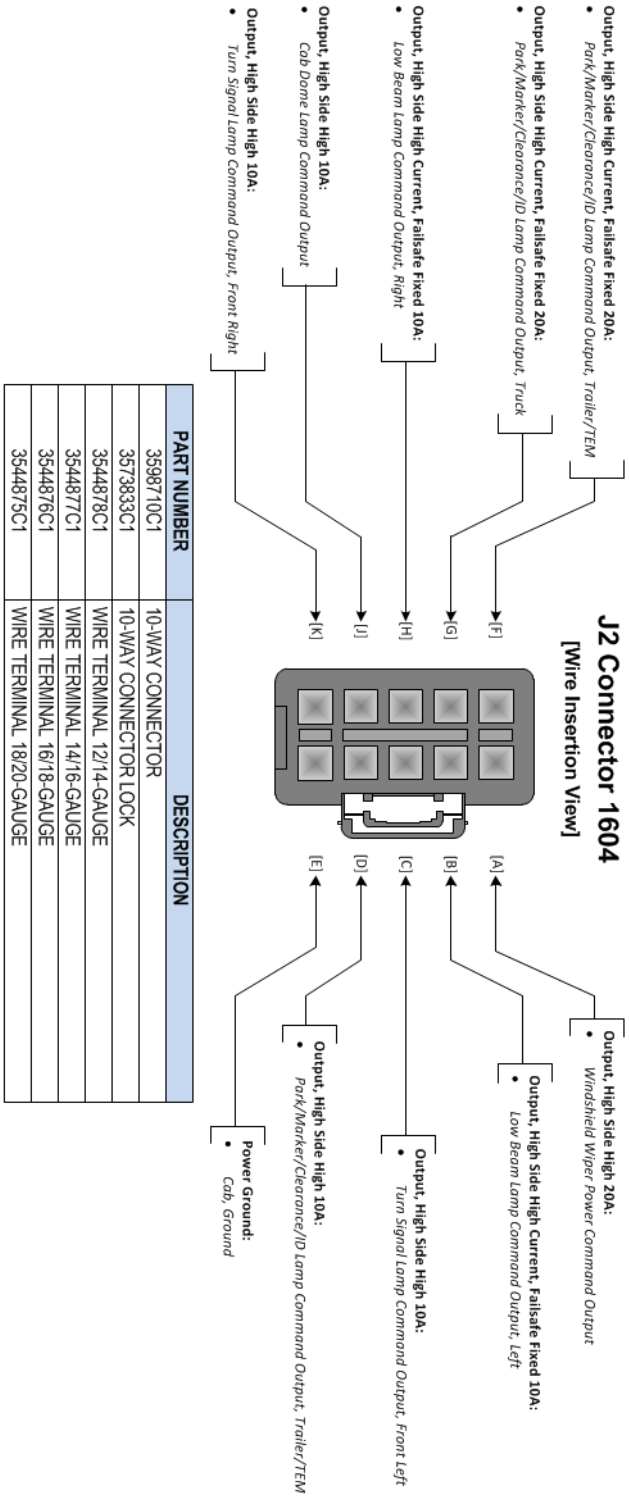

PART NUMBER	DESCRIPTION
3598710C1	10-WAY CONNECTOR
3573833C1	10-WAY CONNECTOR LOCK
3544878C1	WIRE TERMINAL 12/14-GAUGE
3544877C1	WIRE TERMINAL 14/16-GAUGE
3544876C1	WIRE TERMINAL 16/18-GAUGE
3544875C1	WIRE TERMINAL 18/20-GAUGE

J2 Connector 1604

4.6. Body Controller J3 Connector 1600 I/O & Part Number Detail:

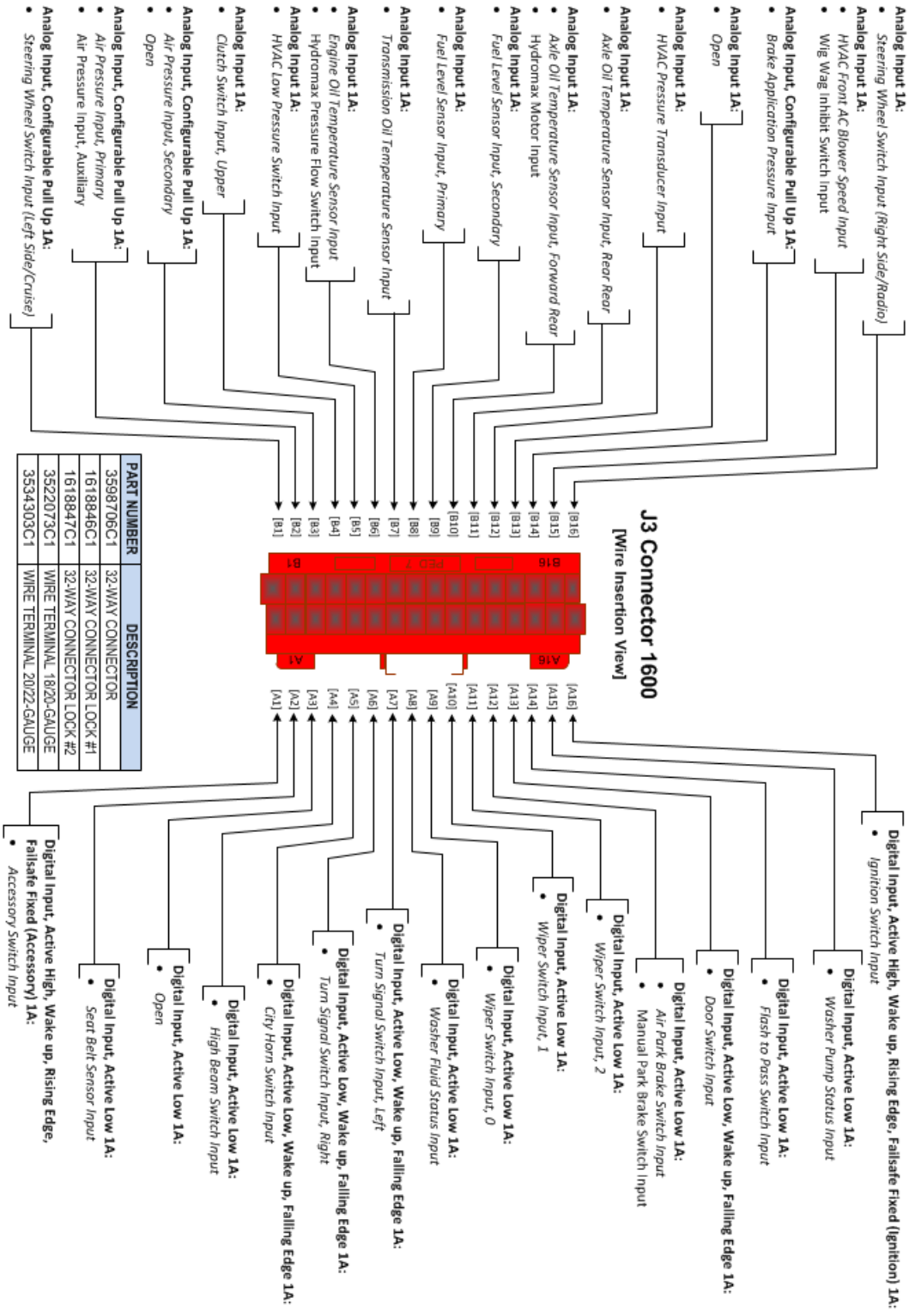

PART NUMBER	DESCRIPTION
3598706C1	32-WAY CONNECTOR
1618846C1	32-WAY CONNECTOR LOCK #1
1618847C1	32-WAY CONNECTOR LOCK #2
3522073C1	WIRE TERMINAL 18/20-GAUGE
3534303C1	WIRE TERMINAL 20/22-GAUGE

J3 Connector 1600

4.7. Body Controller J4 Connector 1601 I/O & Part Number Detail:

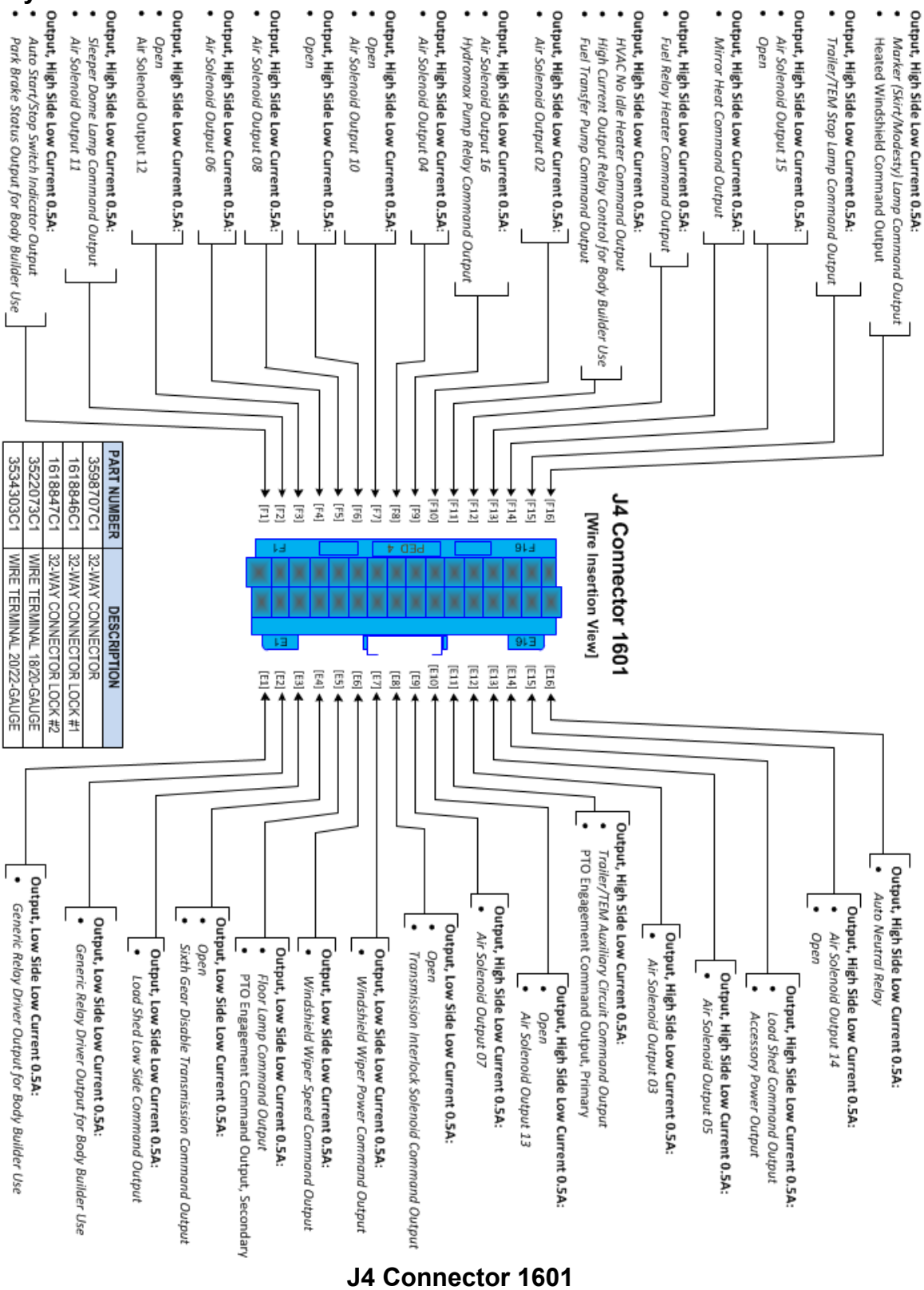

J4 Connector 1601

4.8. Body Controller J5 Connector 1602 I/O & Part Number Detail:

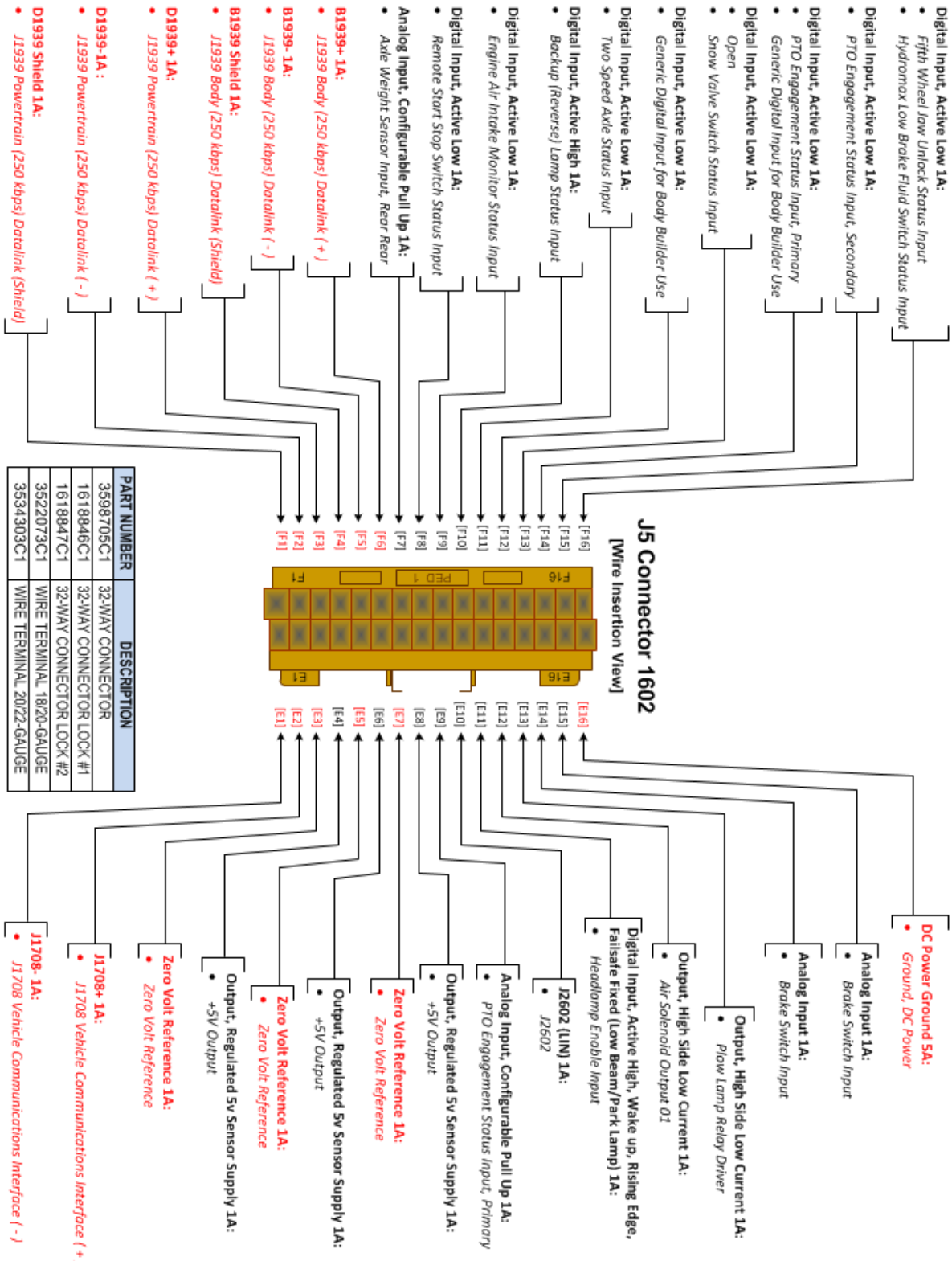

PART NUMBER	DESCRIPTION
3598705C1	32-WAY CONNECTOR
1618846C1	32-WAY CONNECTOR LOCK #1
1618847C1	32-WAY CONNECTOR LOCK #2
3522073C1	WIRE TERMINAL 18/20-GAUGE
3534303C1	WIRE TERMINAL 20/22-GAUGE

J5 Connector 1602

4.9. Body Controller J6 Connector 1605 I/O & Part Number Detail:

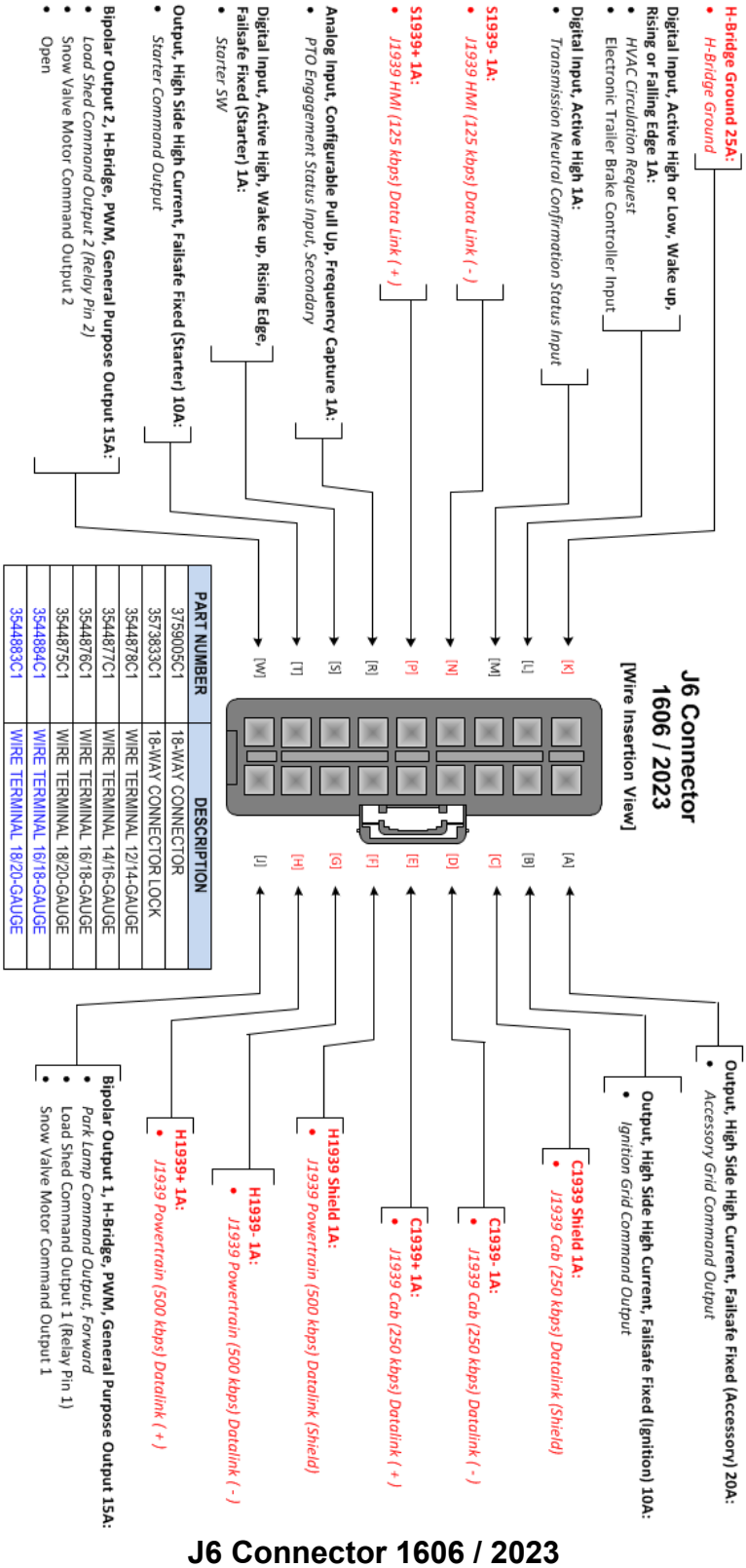

PART NUMBER	DESCRIPTION
3759005C1	18-WAY CONNECTOR
3573833C1	18-WAY CONNECTOR LOCK
3544878C1	WIRE TERMINAL 12/14-GAUGE
3544877C1	WIRE TERMINAL 14/16-GAUGE
3544876C1	WIRE TERMINAL 16/18-GAUGE
3544875C1	WIRE TERMINAL 18/20-GAUGE
3544884C1	WIRE TERMINAL 16/18-GAUGE
3544883C1	WIRE TERMINAL 18/20-GAUGE

J6 Connector 1606 / 2023

4.10. Body Controller J7 Connector 1606 I/O & Part Number Detail:

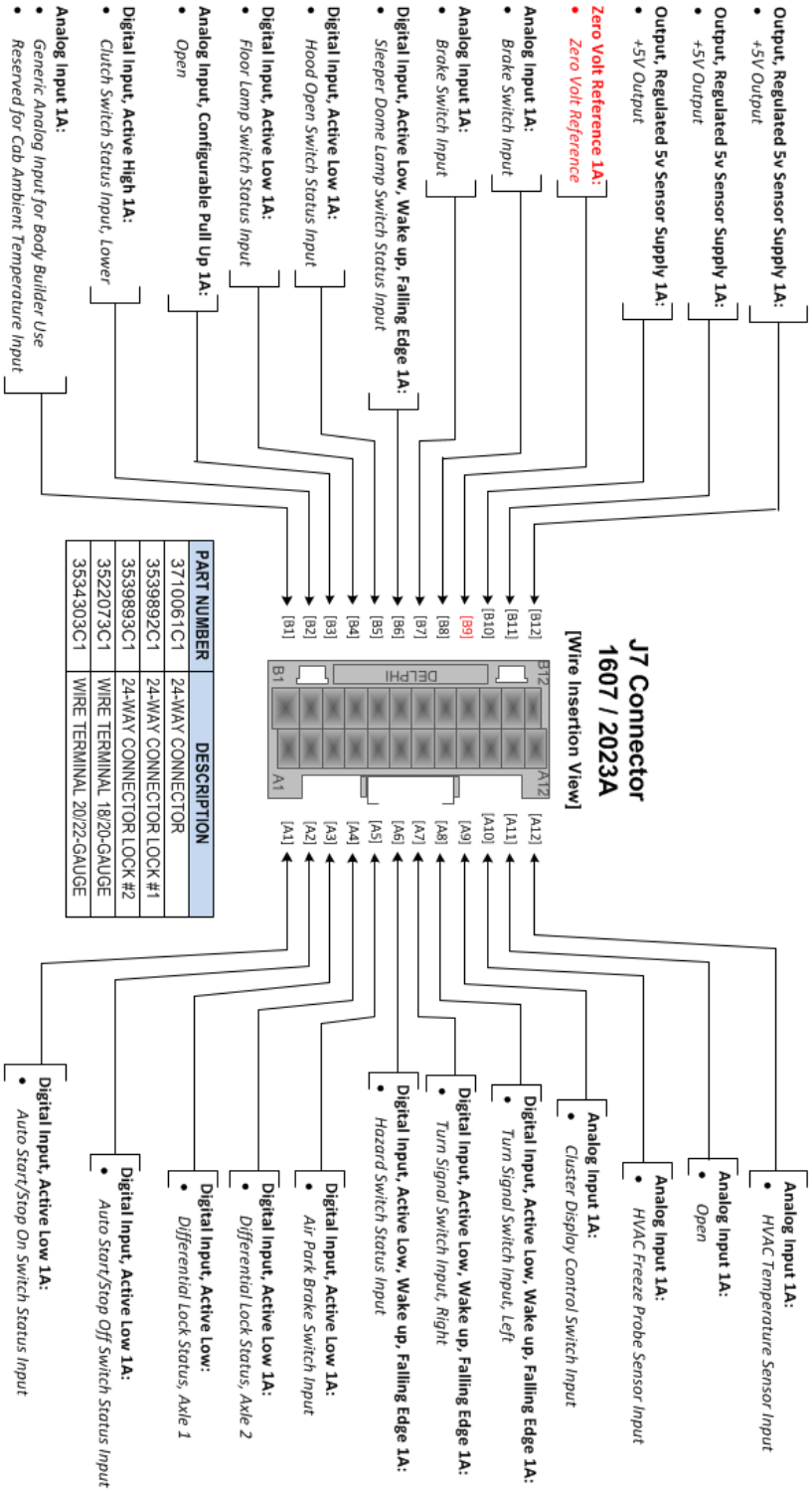

PART NUMBER	DESCRIPTION
3710061C1	24-WAY CONNECTOR
3539892C1	24-WAY CONNECTOR LOCK #1
3539893C1	24-WAY CONNECTOR LOCK #2
3522073C1	WIRE TERMINAL 18/20-GAUGE
3534303C1	WIRE TERMINAL 20/22-GAUGE

J7 Connector 1607 / 2023A

5. Multiplex Switch-Packs (Center Panel Mounted)

5.1. Multiplex Switch-Pack Housing:



Parts Associated with This Device:

PART NUMBER	DESCRIPTION
4057689C2	HOUSING, SWITCH, 6 PACK DIN MULTIPLEX

Multiplex Switch-Pack Housing Part Number

5.2. Multiplex Switch-Pack Cover

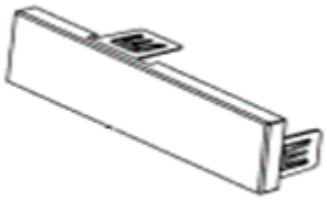

Parts Associated with This Device:

PART NUMBER	DESCRIPTION
3765152C2	PANEL, SINGLE DIN BLANK PLATE

Multiplex Switch-Pack Cover Part Number

5.3. Multiplex Switch-Pack Storage Bin:

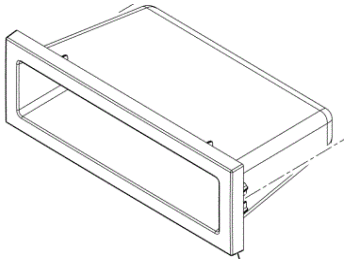

Parts Associated with This Device:

PART NUMBER	DESCRIPTION
3765149C94	BOX, ASSEMBLY, STORAGE BIN, SINGLE

Multiplex Switch-Pack Housing Storage Bin

5.4. Multiplex Switch-Pack Actuators, Blanks (plugs) and Indicators:

Rocker Switch Name	Navistar P/N	Number of Positions	Switch Action	Stable Positions	Indicator	Graphic
Plug	3766052C1	N/A	N/A	N/A	N/A	
Work Light	4102405C1	3	Mono	Center	Yes	
Exterior Light Check	4102406C1	3	Mono	Center	Yes	
Plow Light	4102408C1	2	Bi	Up/Down	Yes	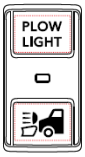
Cab Dome & Door Lights	3766057C1	3	Tri	All	No	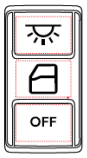
Sleeper Dome & Floor Lights	3766058C1	3	Mono	Center	No	
Floor Light	3766059C1	3	Mono	Center	No	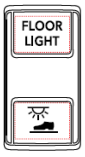
Sleeper Temperature Control	3766061C1	3	Mono	Center	No	

Rocker Switch Table #1

Rocker Switch Name	Navistar P/N	Number of Positions	Switch Action	Stable Positions	Indicator	Function	Graphic
Sleeper Fan Speed	3766062C2	3	Mono	Center	No	Increase N/A Decrease	
Exhaust Brake	3766063C1	2	Bi	Up/Down	Yes	On Off	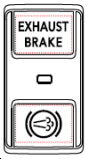
Engine Brake On/Off	4102411C1	2	Bi	Up/Down	Yes	On Off	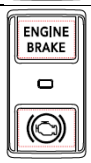
Engine Brake, Selector	3766065C1	3	Tri	All	No	Selects '3' Selects '2' Selects '1'	
Fan Override	4102413C1	2	Bi	Up/Down	Yes	On Off	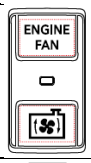
Front Axle 4x4	4102414C1	2	Bi	Up/Down	Yes	On Off	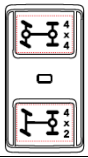
Front Axle 6x6	4102461C1	2	Bi	Up/Down	Yes	On Off	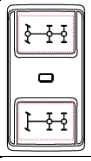
Traction Control Off Road	4102416C1	3	Mono	Center	Yes	On N/A Off	
2 Speed Axle High/Low	3766072C1	2	Bi	Up/Down	No	High Low	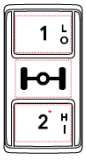

Rocker Switch Table #2

Rocker Switch Name	Navistar P/N	Number of Positions	Switch Action	Stable Positions	Indicator	Function	Graphic
Transfer Case High/Low	4102417C1	2	Bi	Up/Down	Yes	High Low	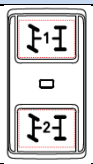
PTO	4102418C1	2	Bi	Up/Down	Yes	On Off	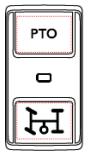
Mirror Heat (Monostable)	4102419C1	3	Mono	Center	Yes	On N/A Off	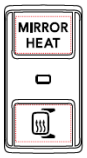
Mirror Heat (Bistable)	3766142C1	2	Bi	Up/Down	Yes	On Off	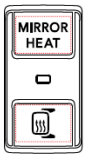
Auto Neutral	4102420C1	2	Bi	Up/Down	Yes	On Off	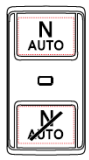
PDL Lock	4102421C1	2	Bi	Up/Down	Yes	On Off	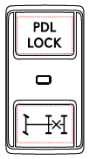
Differential Lock	4102422C1	2	Bi	Up/Down	Yes	On Off	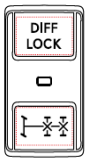
Forward Rear Differential Lock	3766079C1	2	Bi	Up/Down	Yes	On Off	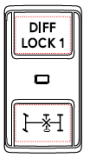
Rear Rear Differential Lock	3766080C1	2	Bi	Up/Down	Yes	On Off	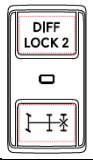

Rocker Switch Table #3

Rocker Switch Name	Navistar P/N	Number of Positions	Switch Action	Stable Positions	Indicator	Function	Graphic
Air Suspension Dump	3766081C1	2	Bi	Up/Down	Yes	On/Off	
5th Wheel Unlock	4102426C1	2	Mono	Down	Yes	Unlock Lock	
5th Wheel Slide	4102456C1	2	Bi	Up/Down	Yes	On Off	
Cruise/Throttle On/Off	3766084C1	3	Mono	Center	No	On N/A Off	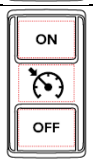
Cruise/Throttle Set/Resume	3766085C1	3	Mono	Center	No	Set N/A Resume	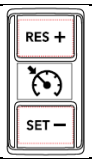
Throttle On/Off	4102435C1	3	Mono	Center	Yes	On N/A Off	
Throttle Deceleration/Acceleration	3766102C1	3	Mono	Center	No	Decelerate N/A Accelerate	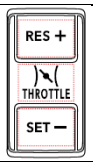
Retarder On/Off	4102427C1	2	Bi	Up/Down	Yes	On Off	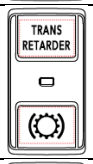
Retarder High/Low	3766087C1	2	Bi	Up/Down	No	High Low N/A	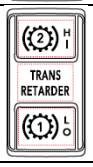

Rocker Switch Table #4

Rocker Switch Name	Navistar P/N	Number of Positions	Switch Action	Stable Positions	Indicator	Function	Graphic
Auxiliary Front Suspension	4102428C1	2	Bi	Up/Down	Yes	On/Off	
Engine Shutdown Override	3766089C1	2	Mono	Down	Yes	On/Off Latched Down	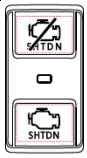
Transfer Case High/Neutral/Low	3766090C1	3	Tri	All	No	High Neutral Low	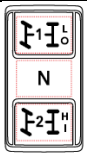
Blank Window Rocker	4102430C1	3	Mono	Center	Yes	On N/A Off	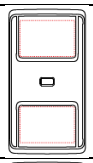
Blank Window Rocker	4102431C1	2	Bi	Up/Down	Yes	On Off	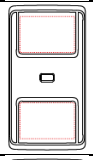
Blank Window Rocker	4102432C1	3	Tri	All	Yes	On N/A Off	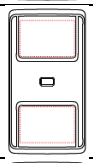
Blank Window Rocker	4102433C1	2	Mono	Down	Yes	On Off	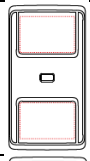
Blower/Road	4102434C1	2	Bi	Up/Down	Yes	On Off	
Auxiliary Transmission	3766096C1	3	Tri	All	No	Low Neutral High	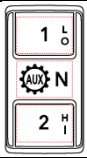
Humphrey Drain Valve Wet Tank	3766097C1	2	Mono	Down	No	On/Off N/A	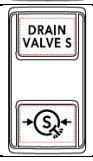

Rocker Switch Table #5

Rocker Switch Name	Navistar P/N	Number of Positions	Switch Action	Stable Positions	Indicator	Function	Graphic
Drain Valve - Prime Tank	3766098C1	2	Mono	Down	No	On/Off	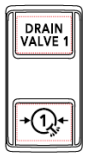
Drain Valve - Secondary Tank	3766099C1	2	Mono	Down	No	On/Off	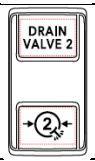
Lift Gate	4102436C1	3	Mono	Center	Yes	On N/A Off	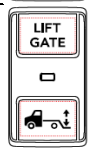
Lift Axle Enable	4102437C1	2	Bi	Up/Down	Yes	On Off	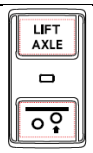
Lift Axle Up/Down	3766105C1	3	Mono	Center	No	Up N/A Down	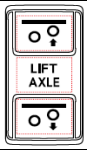
PTO 1	4102438C1	2	Bi	Up/Down	Yes	On Off	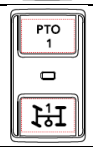
PTO 2	4102439C1	2	Bi	Up/Down	Yes	On Off	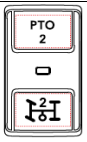
120V AC	4102440C1	3	Mono	Center	Yes	On N/A Off	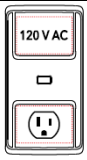
Engine Stop/Clear	4102441C1	3	Mono	Center	Yes	Stop N/A Clear	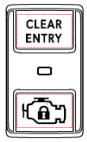
0/5	3766111C1	3	Mono	Center	No	Selects '0' N/A Selects '5'	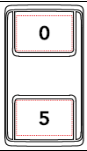

Rocker Switch Table #6

Secondary road

Rocker Switch Name	Navistar P/N	Number of Positions	Switch Action	Stable Positions	Indicator	Function	Graphic
1/6	3766112C1	3	Mono	Center	No	Selects '1' Selects '6'	
2/7	3766113C1	3	Mono	Center	No	Selects '2' Selects '7'	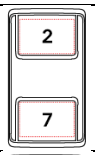
3/8	3766114C1	3	Mono	Center	No	Selects '3' N/A Selects '8'	
4/9	3766115C1	3	Mono	Center	No	Selects '4' N/A Selects '9'	
Economy	4102442C1	2	Mono	Down	Yes	On Off	
Inhibit Regeneration (Monostable)	4102443C1	3	Mono	Center	Yes	On N/A Off	
Inhibit Regeneration (Bistable)	4102444C1	2	Bi	Up/Down	Yes	On Off	
Parked Regeneration	4102445C1	3	Mono	Center	Yes	On N/A Off	
6th Gear Disable Switch	4102446C1	2	Bi	Up/Down	Yes	On Off	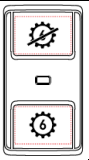
Wig-Wag Headlight Enable	4102447C1	2	Bi	Up/Down	Yes	On Off	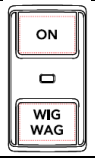

Rocker Switch Table #7

Rocker Switch Name	Navistar P/N	Number of Positions	Switch Action	Stable Positions	Indicator	Function	Graphic
Rear Axle Load Distribution	4102448C1	2	Mono	Down	Yes	On N/A Off	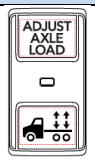
Suspension Raise	4102449C1	2	Bi	Up/Down	Yes	On Off	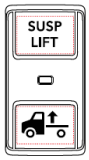
Transfer Case	4102450C1	2	Bi	Up/Down	Yes	On Off	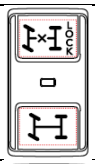
Winch On/Off	4102451C1	2	Bi	Up/Down	Yes	On Off	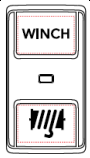
Winch In/Out	3766130C1	3	Mono	Center	No	Out N/A In	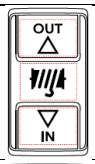
Hill Start Aid	4102452C1	2	Mono	Down	Yes	On/Off N/A	
FTS Transmission Bypass Enable	4102453C1	2	Mono	Down	Yes	On/Off N/A	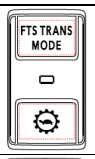
Heated Windshield	4102454C1	3	Mono	Center	Yes	On N/A Off	
Driver Position	4102455C1	2	Bi	Up/Down	Yes	Position 2 Position 1 N/A Off	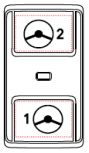

Rocker Switch Table #8

Rocker Switch Name	Navistar P/N	Number of Positions	Switch Action	Stable Positions	Indicator	Function	Graphic
Trailer Learn	4102457C1	2	Mono	Down	Yes	On/Off N/A	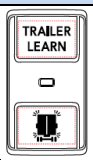
Auto Start/Stop	4102459C1	3	Mono	Center	Yes	On N/A Off	
Allison Transmission Mode	4102460C1	2	Mono	Down	Yes	On/Off N/A	
Engine Brake (ECE)	4095306C1	3	Tri	All	No	High Medium Off	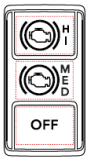
Sleeper Auto Climate	4102463C1	2	Bi	Up/Down	Yes	On Off	
Lift Axle Up/Down 1	4072987C1 4149251C1	3	Mono	Center	No	On N/A Off	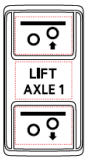
Lift Axle Up/Down 2	4149253C1	3	Mono	Center	No	On N/A Off	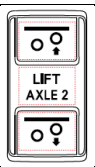
Lift Axle Up/Down 3	4072995C1 4149255C1	3	Mono	Center	No	On N/A Off	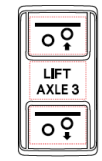
Aux Trailer	4102462C1	3	Mono	Center	Yes	On N/A Off	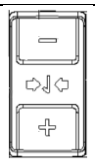

Rocker Switch Table #9

Rocker Switch Name	Navistar P/N	Number of Positions	Switch Action	Stable Positions	Indicator	Function	Graphic
PTO	4114975C1	3	Mono	Center	Yes	On Off	
AXLE 1 PRESSURE INCR/DECR	4149252C1	3	Mono	Center	Yes	On	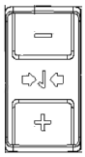
Aux Trailer	4102462C1	2	Bi	Up/Down	Yes	On	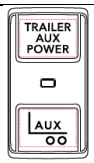
AXLE 2 PRESSURE INCR/DECR	4149254C1	3	Mono	Center	Yes	On	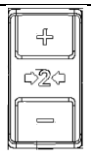
AXLE 3 PRESSURE INCR/DECR	4149256C1	3	Mono	Center	Yes	On	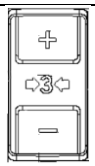
Paver Assist	4747739C1	2	Bi	Up/Down	Yes	On	

Rocker Switch Table #10

5.5. Multiplex Switch-Pack Warning Lights:

Warning Light	Navistar P/N	Graphic
Blank	4108104C1	
Hill Start Assist	4084814C1	
Auto Neutral	4084815C1	
Boom Up	4084816C1	
Outrig Out	4084817C1	
Body Up	4084818C1	
Gate Open	4084819C1	
Rear Alert	4084820C1	

Warning Light Table #1

Warning Light	Navistar P/N	Graphic
120V AC Power	4084821C1	
Jaw Locked	4084823C1	
Jaw Unlocked	4084824C1	
Range Inhibit	4084825C1	

Warning Light Table #2

5.6. Switch Label Applique Sheet #1 (Utility/Wrecker):

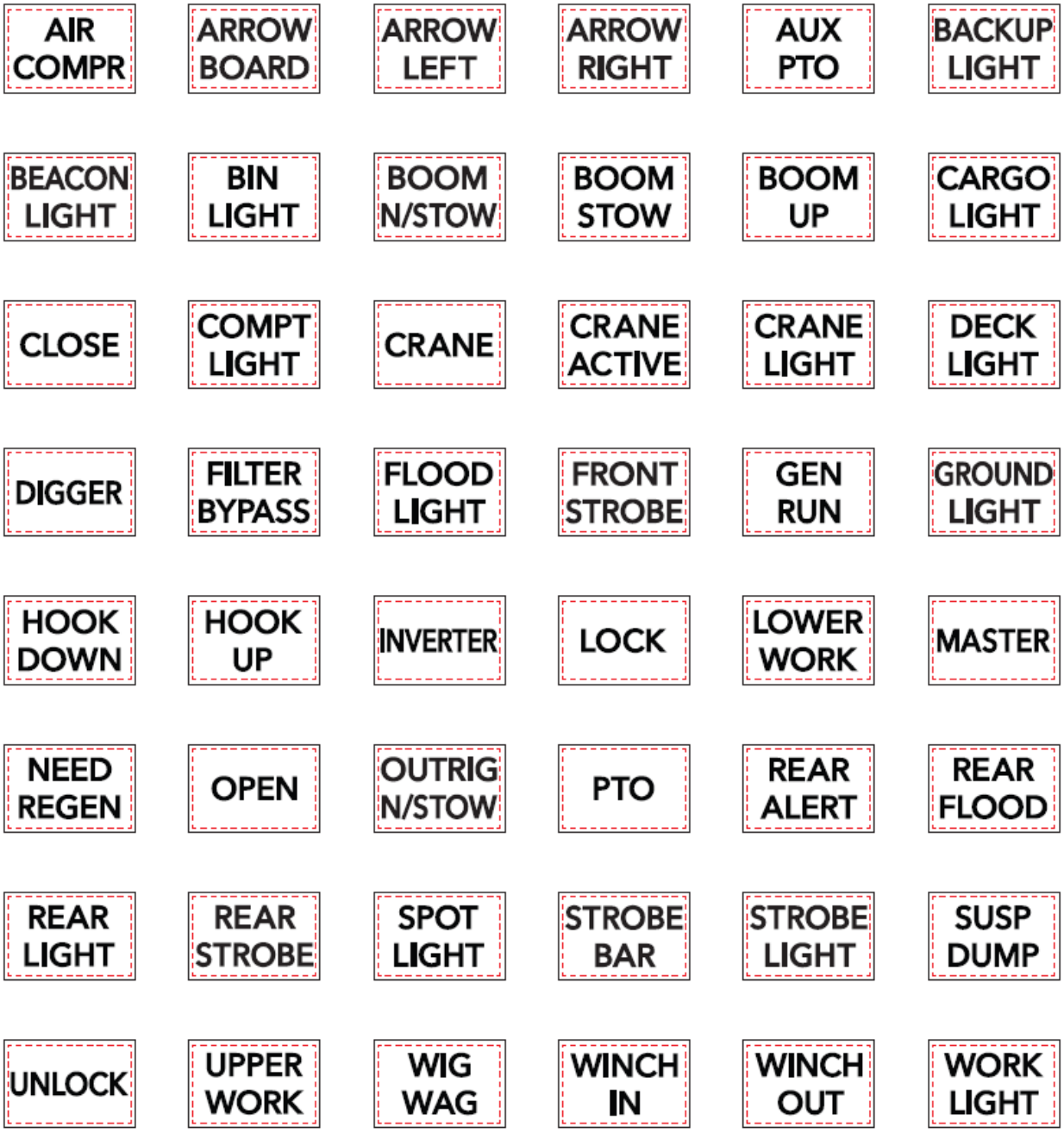

Switch Label Applique Sheets #1 - #5 are included under part number 4110384C1.

5.7. Switch Label Applique Sheet #2 (Fire):



Switch Label Applique Sheets #1 - #5 are included under part number 4110384C1.

5.8. Switch Label Applique Sheet #3 (Limo/Bus/Propane):



Switch Label Applique Sheets #1 - #5 are included under part number 4110384C1.

5.9. Switch Label Applique Sheet #4 (Airport Refueler/Concrete Mixer):



Switch Label Applique Sheets #1 - #5 are included under part number 4110384C1.

5.10. Switch Label Applique Sheet #5 (Plow/Dump):



Switch Label Applique Sheets #1 - #5 are included under part number 4110384C1.

5.11. Switch Label Applique Sheet #6 (Tanker)

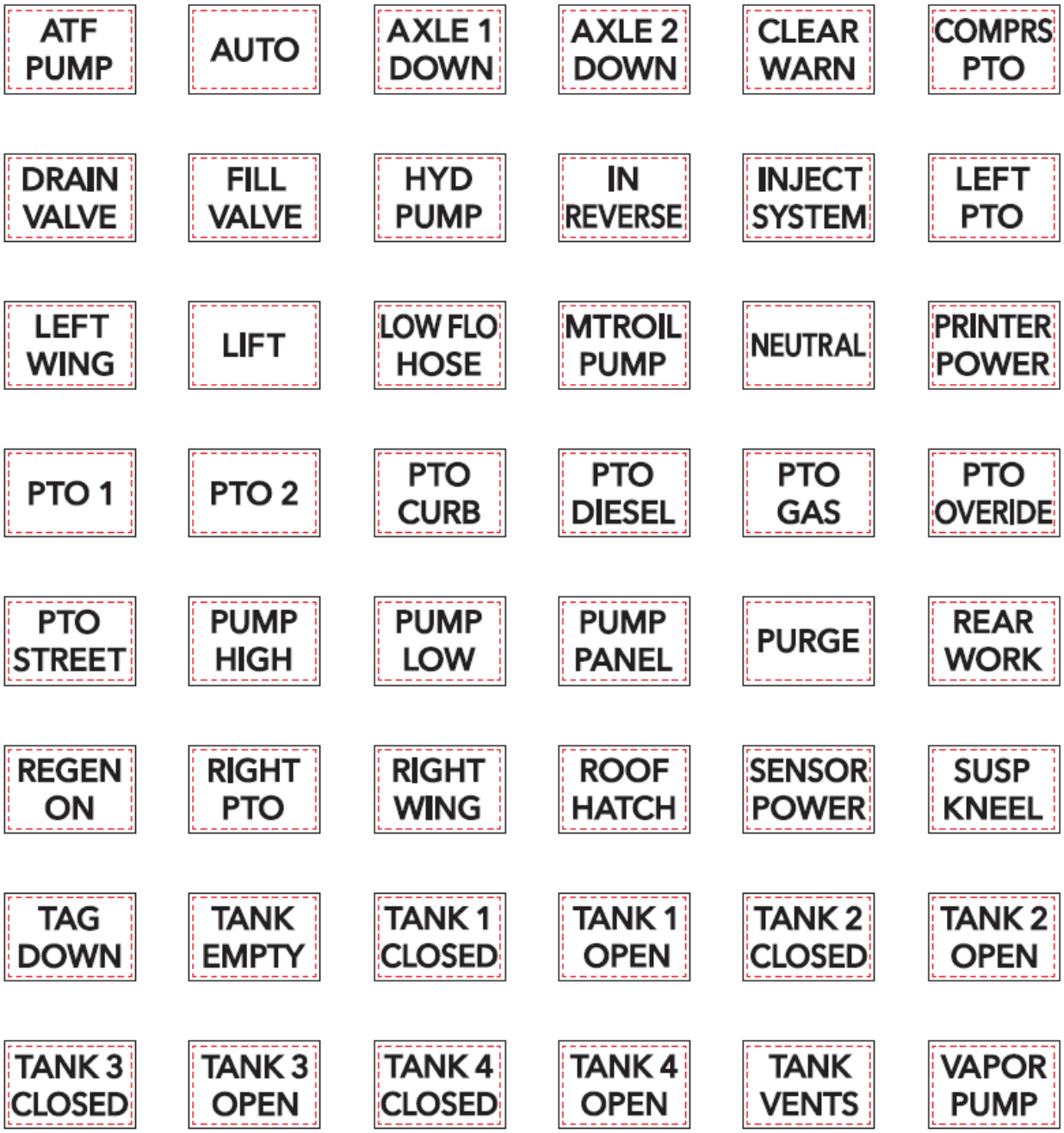

Switch Label Applique Sheet #6 Part Number 2518768C1

5.12. Switch Label Applique Sheet #7 (Ambulance/Fire):



Switch Label Applique Sheet #7 Part Number 2518769C1

5.13. Switch Label Applique Sheet #8 (Adv Fire/Ambulance):



Switch Label Applique Sheet #8 Part Number 2518770C1

5.14. Switch Label Applique Sheet #9 (On/Off/Blank):

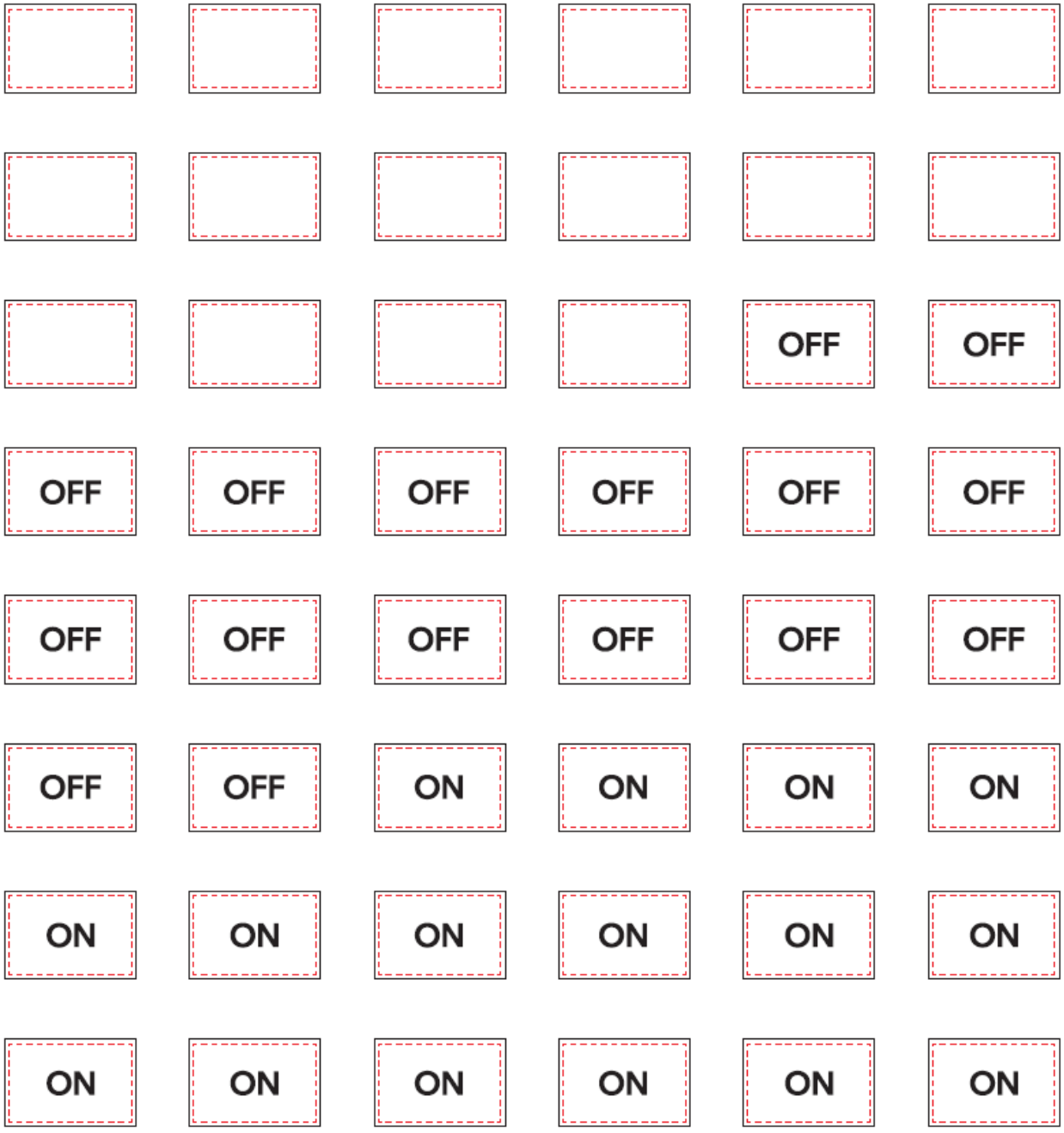

Switch Label Applique Sheet #9 Part Number 2518771C1

5.15. Switch Label Applique Sheet #10 (Miscellaneous):



Switch Label Applique Sheet #10 Part Number 2518772C1

6. Customized Steering Wheel Switches

0008XPG: STEERING WHEEL CONTROLS (2) Customizable Switch Pods

0008XPH: STEERING WHEEL CONTROLS Customizable Switch Pod

Steering wheel switches include a right-side pod and a left-side pod. Steering wheel switches have several configurations and part numbers.

Body Builder Variant 1 - Blank	4307659C91	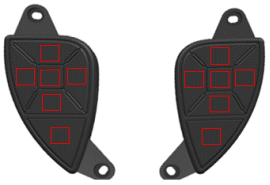
Body Builder Variant 2 - Cruise, Marker Interrupt, Blank	4324016C91	
Body Builder Variant 3 - Cruise, Blank	4330394C91	

Steering Wheel Switch Pod Configurations

Customer applications can be customized by using the part number configurations from the table above.

Note: Clock spring part numbers and steering column harnesses may need to be changed, depending on the desired changes and what was built on the truck.

Steering Wheel Switch Label Configurations

Note: The switches can be labeled using the stickers provided with part number 4333919C1.

Note: Refer to the appropriate integration guide for the most up to date information.

Steering wheel switches have labels to use on each steering wheel switch pod. Depending on the customer application, different labels will be used. Refer to the appropriate integration guide for detailed steering wheel switch label configurations.

	Utility/ Wrecker SHEET 1	Fire/Plow SHEET 2	Limo Bus/Bus/Propane SHEET 3	Airport Refueler/Concrete Mixer/Garbage SHEET 4	Plow/Dump SHEET 5	Tanker SHEET 6	Ambulance/Fire SHEET 7	Adv Fire/Ambulance SHEET 8	ON/OFF/BLANK SHEET 9	Miscellaneous SHEET 10
#	Feature	Feature	Feature	Feature	Feature	Feature	Feature	Feature	Feature	Feature
1	AIR COMPR	AUX T-GATE	A/C	B LOAD GATE	ALT FLASH	ATF PUMP	110 V INVT	A/C HEAT	Blank	ARROW SPLIT
2	ARROW BOARD	AUX WARN	AUX 1	AUX 1	AUGER FORWARD	AXLE 1 DOWN	12 VOLT OUTLET	CENTER DOME	Blank	AUX 1
3	ARROW LEFT	BROOM CKT	AUX 2	AUX 2	AUGER REVERSE	AXLE 1 UP	AIR HORN	COOL	Blank	AUX 2
4	ARROW RIGHT	CAMERA LIGHT	AUX 3	BODY RAISE	AUX 1	AXLE 2 DOWN	ALLEY	DOCK LIGHTS	Blank	AUX 3
5	AUX PTO	CLEAR DISABLE	AUX HEAT	BOTTOM LOAD	AUX 2	AXLE 2 UP	ALLEY LIGHTS	DRIVER DOME	Blank	BATH ASSIST
6	BACKUP LIGHT	CLEAR LIGHTS	BACK ALARM	CHUTES DOWN	AUX 3	AXLE 3 DOWN	BROW LIGHT	ELECT SUCTION	Blank	BATH LIGHT
7	BEACON LIGHT	FRONT SCENE	BAR LIGHTS	CHUTES LOCK	BLAST	AXLE 3 UP	CITY HORN	FRONT ALARM	Blank	BLOWER
8	BIN LIGHT	HIGH IDLE	BATH PUMP	CHUTES UNLOCK	BODY ENABLE	CLEAR WARN	DRIVER ALLEY	FRT RAIL LIGHTS	Blank	BOOM LEFT
9	CARGO LIGHT	LADDER	BELLY VALVE	CHUTES UP	BODY LOWLM	COMPRS PTO	ELECT HORN	GEN	Blank	BOOM RIGHT
10	CLOSE	LEFT WING LIGHT	BRK INT OVERIDE	CLOSE BOOM	CAMERA WASH	DRAIN VALVE	EMERG MASTER	HEAT	Blank	CAB ROTO
11	COMPT LIGHT	LEFT SCENE	CABIN LIGHTS	DEADMAN SWITCH	CONVEY LIGHT	FILL VALVE	EXHST FAN	HIGH THROTL	Blank	CAMERA
12	CRANE	LF DUMP OPEN	CEILING LIGHT	DEFUEL VALVE	CONVEYOR	HYD PUMP	FRONT CENTER	HOSE LIGHTS	Blank	CAMERA DRY
13	CRANE DOWN	LF DUMP CLOSE	CLOSE GATE	DRUM CHRGE	GATE DOWN	HYD OVERRIDE	FRONT FLASH	LADDER DOWN	Blank	CHARGER POWLM
14	CRANE EXTEND	LIGHT BAR	DOME LIGHT	DRUM DISCHRGE	GATE UP	INJECT SYSTEM	FRONT LIGHT	LADDER LIGHTS	Blank	CLEAR JAM
15	CRANE LEFT	LIGHT LOWLM	DRIVE LIGHTS	DRUM START	HI LIFT DOWN	LEFT PTO	FRONT WARN	LADDER PTO	Blank	COMPT LIGHT
16	CRANE LIGHT	LOWLM WARN	DUMP VALVE	DRUM STOP	HI LIFT UP	LEFT WING	INTSEC LIGHTS	LADDER UP	Blank	DAY
17	CRANE RETRACT	OPTI COM	EMERG STOP	EXT SPEAKR	HIGH RAIL	LIFT	LEFT ALLEY	LEFT COT	Blank	DIESEL GEN
18	CRANE RIGHT	PRIMARY WARN	FAN	EXTEND	LOWLM BED	LOW FLO HOSE	LEFT CENTER	LEFT DOME	OFF	DIESEL HEATER
19	CRANE UP	PTO 1	FAN 1	FRT BOW NOZZLE	LOWLM BOX	NITROIL PUMP	LEFT FRONT	LEFT EVAC	OFF	DIESEL PUMP
20	DECK LIGHT	PTO 2	FAN 2	HOPPER DOWN	P-ARM IN	PRINTER POWLM	LEFT REAR	LEFT WORKLTS	OFF	ELECT MAGNET
21	DIGGER	PUMP & ROLL	FLOOR HEATER	HOPPER LIGHT	P-ARM OUT	PTO 1	LEFT WARN	LOW THROTL	OFF	FAN HIGH
22	FLOOD LIGHT	PUMP MODL	FLOOR LIGHTS	HOPPER UP	PAUSE	PTO 2	LOAD MNGM	LOWLM EMERG	OFF	FAN LOW
23	FRONT STROBE	REAR EMERG	FRONT A/C	LEFT CHUTE	PLOW BALANCE	PTO CURB	MASTER THROTL	LOWLM IDLE	OFF	FLORES LIGHT
24	GEN RUN	REAR SCENE	HEAT 1	MACHINE	PLOW DOWN	PTO DIESEL	METEOR LIGHT	LRC III POWLM	OFF	FOG LIGHTS
25	GROUND LIGHT	RIGHT WING LIGHT	HEAT 2	MASTER POWLM	PLOW FLOAT	PTO GAS	MNGM CANCEL	METER POWLM	OFF	FRONT SWEEP
26	HOOK DOWN	RIGHT SCENE	HEATED MIRROR	MID START	PLOW LEFT	PTO OVERIDE	OXYGEN	OUTRIG DOWN	OFF	HYD SHUTDN
27	HOOK UP	ROAD MODL	HOSE REEL	MID STOP	PLOW LIGHT	PTO STREET	OXYGEN LIGHT	OUTRIG UP	OFF	LAMP TEST
28	INVERTER	ROOF EMERG	LASER LIGHTS	OPEN DOOR	PLOW RIGHT	PUMP PANEL	PASS ALLEY	POLE LIGHT	OFF	LEFT FLOOD
29	LOCK	RR DUMP CLOSE	LIFT ENABLE	PACK	PLOW SAVER	PUMP HIGH	PERIM LIGHT	POWLM	OFF	LEFT READ
30	LOWLM WORK	RR DUMP OPEN	MAP LIGHT	PTO 1	PLOW UP	PUMP LOW	PTO GEN	PUMP	OFF	LEFT SWEEP
31	MASTER	RT DUMP CLOSE	MSOW LIGHTS	PTO 2	PRE-WET	PURGE	Q2B	PUMP 1	OFF	LIFT GATE
32	OPEN	RT DUMP OPEN	OPEN GATE	PUSHER DOWN	RAISE BED	REAR WORK	Q2B BRAKE	PUMP 2	OFF	NIGHT
33	PTO	SCENE LIGHTS	OVER RIDE	PUSHER UP	RAISE BOX	RIGHT PTO	REAR ALLEY	RADIO REMOTE	OFF	PACKER LEFT
34	PTO 1	SECND WARN	PA POWLM	REAR CHUTE	SANDER	RIGHT WING	REAR CENTER	RAISE IDLE	ON	PACKER ON
35	PTO 2	SIREN	PTO	REMOTE OVERIDE	SCRPR LIGHT	ROOF HATCH	REAR WARN	REAR RAIL LIGHTS	ON	PACKER RIGHT
36	REAR FLOOD	T-GATE CLOSE	PTO LEFT	RETRACT	SCRPR LEFT	SENSOR POWLM	RIGHT ALLEY	REAR CAMERA	ON	PERIMETER LIGHT
37	REAR LIGHT	T-GATE LATCH	PTO RIGHT	RIGHT CHUTE	SCRPR DOWN	SUSP KNEEL	RIGHT CENTER	RF POWLM	ON	REAR SWEEP
38	REAR STROBE	T-GATE OPEN	REAR A/C	SUMMLM	SCRPR RIGHT	TAG DOWN	RIGHT FRONT	RIGHT COT	ON	RIGHT FLOOD
39	SPOT LIGHT	T-GATE UNLATCH	REAR DELIVERY	THROTL ENABLE	SCRPR UP	TAG UP	RIGHT REAR	RIGHT DOME	ON	RIGHT READ
40	STROBE BAR	UPPER WARN	ROOF A/C	TOOL CIRCUIT	SHAKER	TANK 1 OPEN	RIGHT WARN	RIGHT WORKLTS	ON	RIGHT SWEEP
41	STROBE LIGHT	VIBRATOR	ROOF LIGHT	TRUCK	SPDR -	TANK 2 CLOSED	SIDE WARN	START GEN	ON	SHRED POWLM
42	SUSP DUMP	WING HEEL DOWN	SELF TEST	U WING NOZZLE	SPDR +	TANK 2 OPEN	SIREN BRAKE	LOWLM DOWN	ON	SHUT DOWN
43	UNLOCK	WING HEEL UP	SIDE DELIVERY	UNLOCK BOOM	SPREDR	TANK 3 CLOSED	SIREN HORN	LOWLM UP	ON	START
44	UPPER WORK	WING TOE DOWN	SIDE EVAC	VACCUM	SPREDR LIGHT	TANK 3 OPEN	STEP LT CANCEL	WAIL	ON	STOP
45	WIG WAG	WING TOE UP	STEP HEATER	WATER	STORM LIGHT	TANK 4 CLOSED	STEP LIGHT	WATER CANNON	ON	SUSP RAISE
46	WINCH IN	WING CAMERA	TV MONITOR	WATER PUMP	TARP OUT	TANK 4 OPEN	STROBE AMBER	WHEEL LIGHTS	ON	TAIL LT PUFFER
47	WINCH OUT	WING IN	VAPOR VALVE	WING LIGHT	TARP IN	TANK VENTS	STROBE BLUE	XFER CASE	ON	VAC OFF
48	WORK LIGHT	WING OUT	WHEEL CHAIR	WINTER	TIRE CHAINS	VAPOR PUMP	STROBE WHITE	YELP	ON	VAC ON

Stickers Provided with 4333919C1



Sample of Sheet Provided with 4333919C1

Body Controller Software Feature Codes:

Custom switch configuration requires combinations of various feature codes. Feature codes 597080 is the left-side pod and 597098 is the right-side pod. They are required if the corresponding pod is required in the steering wheel. These feature codes set up the analog inputs to the BCM from the switches.

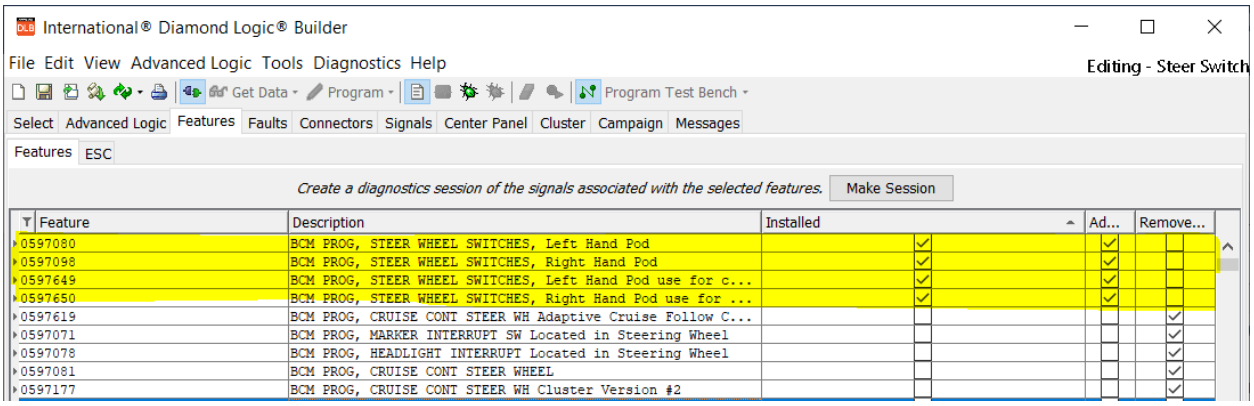

Features as Shown in DLB

Note: All features associated with the (R/L) switch pod intended to be used for custom application must be removed/ not included in the configuration these include, but may not be limited to:

- Feature code 597071– Marker Interrupt Switch
- Feature code 597078 – Headlight Interrupt Switch
- Feature code 597081 – Cruise Cont. Steer Wheel
- Feature code 597145 – Radio Controls
- Feature code 597177 – Cruise Control Switch
- Feature code 597619 – Adaptive cruise selectable following distance
- Feature code 597620 – Adaptive cruise selectable following distance for fusion 3.0

Note: Cruise control functionality can be relocated from the steering wheel pods to the Mux Switch pack in the IP using feature code **597528**

Note: Both the feature for the installed side pod and the use of that pod for custom application must be configured:

Electrical feature code required	Left pod	Right pod
Add Pod to configuration	597080	597098
Enable Pod for custom application	597649	597650

Advanced Logic Programming

Note: Advanced logic programming, written with DLB, is required to enable the steering wheel switch customer Applications. The physical steering wheel pod switches are all discrete, normally open, and momentary contact. The input signals used in DLB that read the switches are also normally open contacts like most input contacts in DLB are. If latching operation of the output is desired a software latch must be used, one efficient method is to use an intermediate variable with a toggle modifier this also requires an edge modifier on the input to ensure proper controlled operation.

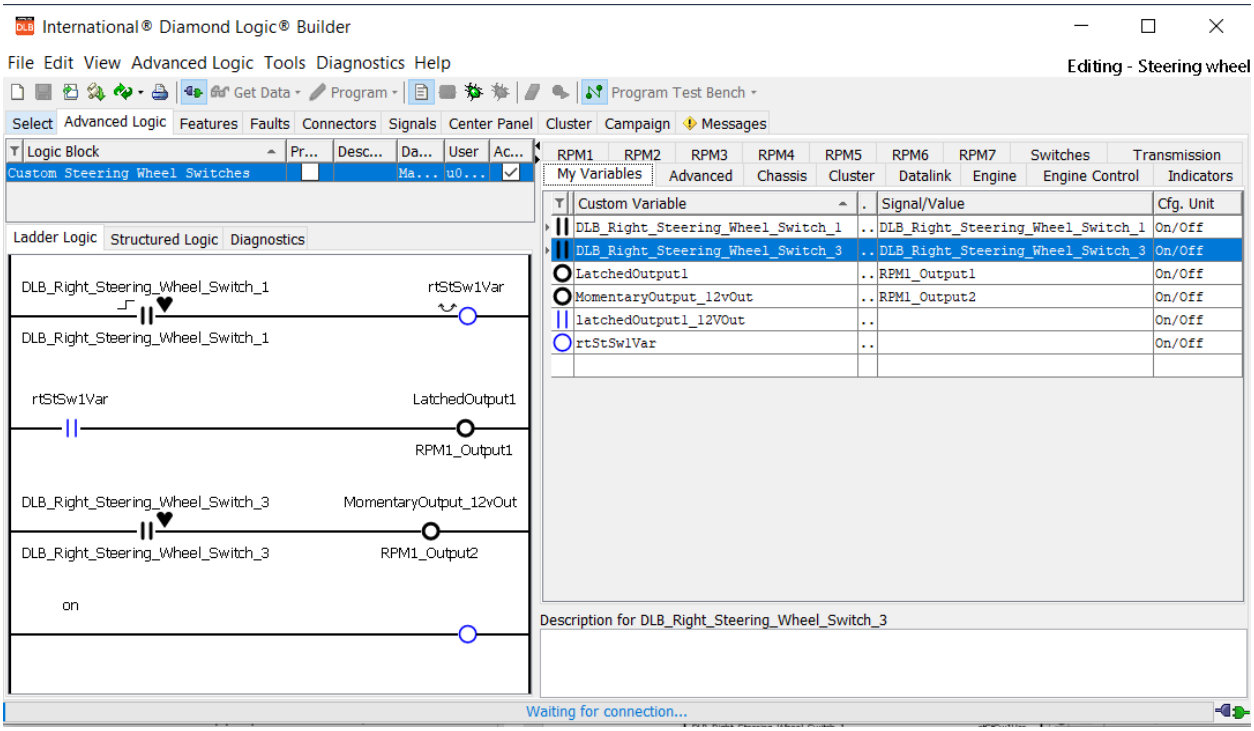

Advanced Logic Sample

7. Air Solenoid 4-Packs:

7.1. Air Solenoid 4-Pack Wiring:

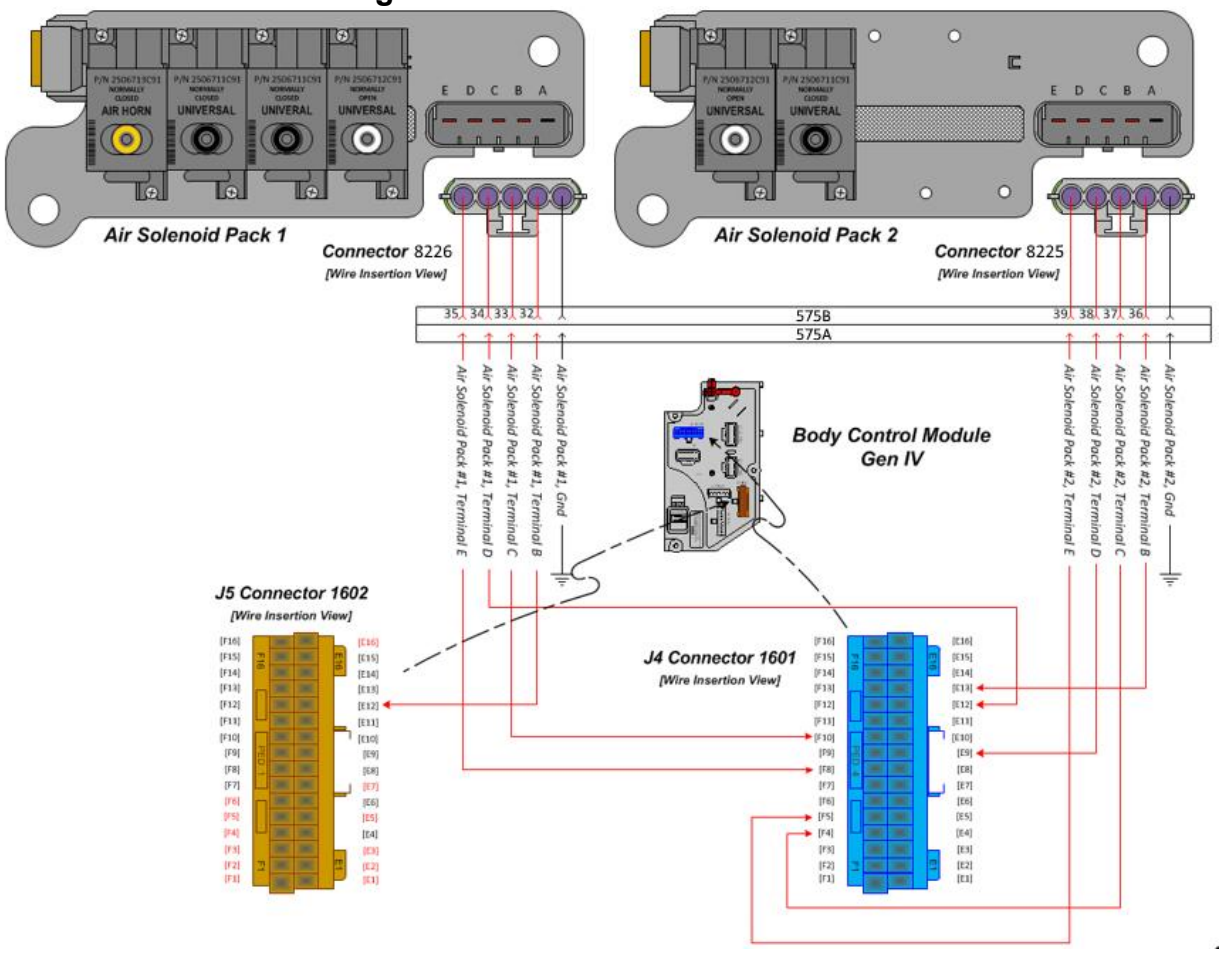

Air Solenoid 4-Pack Wiring Diagram

7.2. Air Solenoid 4-Pack Module Base:

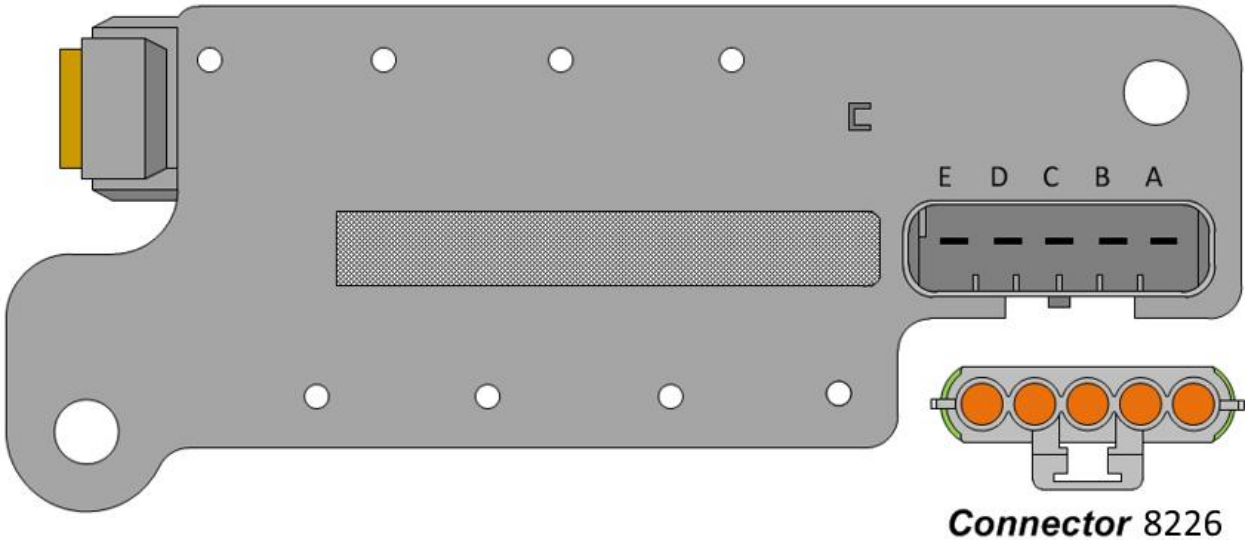

Air Solenoid Module:

PART NUMBER	DESCRIPTION
2505594C1	4-PACK AIR SOLENOID BASE
1661375C2	4-PACK AIR SOLENOID BASE 5-CAVITY CONNECTOR
1661376C1	4-PACK AIR SOLENOID BASE 5-CAVITY CONNECTOR LOCK
2033816C1	4-PACK AIR SOLENOID WIRE TERMINAL 14-GAUGE
2033819C1	4-PACK AIR SOLENOID WIRE TERMINAL 18-GAUGE
0589391C1	4-PACK AIR SOLENOID WIRE TERMINAL SEAL 14-GAUGE
2607909C1	4-PACK AIR SOLENOID WIRE TERMINAL SEAL 18-GAUGE

Parts Associated with Air Solenoid Modules

7.3. Air Solenoids:

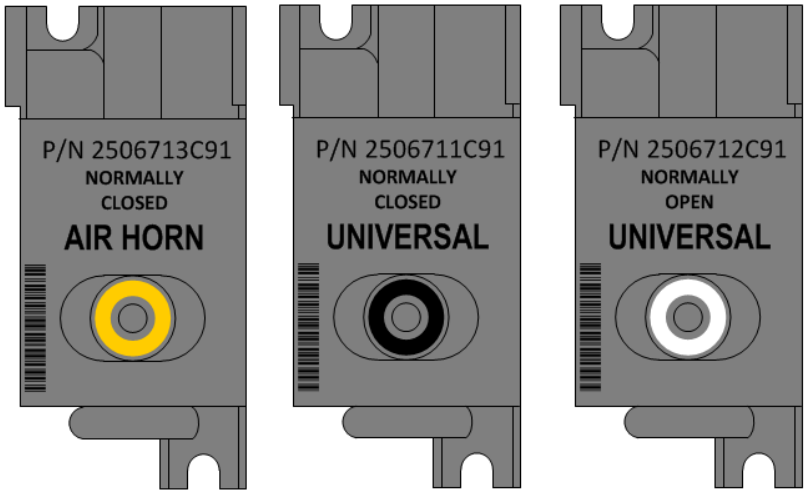

Air Solenoids Variants

Note: Although many features employ the use of the 4-pack air solenoid modules - Including features using multiple air solenoid modules where each module could contain up to a maximum of four air solenoids. Despite their diverse utilization and flexible applicability, air solenoids can be categorized into three configurations.

- Normally Closed 6-Cubic Foot Per Minute (CFM) volumetric pneumatic flow. This air solenoid can be quickly identified by its yellow band around the pneumatic fitting release collar. This air solenoid is most commonly used for applications like chassis mounted pneumatic [air] horn/s and custom applications where a higher level of pneumatic volumetric communication is required.
- Normally Closed 4-Cubic Foot Per Minute (CFM) volumetric pneumatic flow. This air solenoid can be quickly identified by its black band around the pneumatic fitting release collar. This air solenoid is most commonly used for applications like pneumatically controlled power take off units, transfer case shift controls, universal applications, and the like.
- Normally Open 4-Cubic Foot Per Minute (CFM) volumetric pneumatic flow. This air solenoid can be quickly identified by its white band around the pneumatic fitting release collar. This air solenoid is most commonly used for applications like universal applications and the like.

Air Solenoid Part Kits (Includes "O" Rings, Fasteners, Cap, Etc.):

PART NUMBER	DESCRIPTION
AIR SOLENOIDS	
2506713C91	KIT AIR UNIVERSAL SOLENOID, 6-CFM NORMALLY CLOSED
2506711C91	KIT AIR UNIVERSAL SOLENOID, 4-CFM NORMALLY CLOSED
2506712C91	KIT AIR UNIVERSAL SOLENOID, 4-CFM NORMALLY OPEN

Air Solenoid and Associated Parts Kit

8. Lighting Control Module:

8.1. Lighting Control Module Housing:



LCM *(Pictured example Configured with Auto Light Ctrl & Fog Lights)*

8.2. Lighting Control Module and Associated Parts:

PART NUMBER	DESCRIPTION
LIGHTING CONTROL MODULES	
4080940C1	HOUSING SWITCH LIGHT CONTROL MODULE W/AUTO, FOG LIGHT
4080941C1	HOUSING SWITCH LIGHT CONTROL MODULE W/AUTO
4086867C1	HOUSING SWITCH LIGHT CONTROL MODULE W/FOG
4086868C1	HOUSING SWITCH LIGHT CONTROL MODULE N/AUTO, FOG LIGHT
4086869C1	HOUSING SWITCH LIGHTING CONTROL MODULE W-AUTO RR-FR FOG
4086870C1	HOUSING SWITCH LIGHTING CONTROL MODULE W-RR-FR FOG

Lighting Control Module Variants

9. Remote Power Module (RPM):

Remote power modules provide a method of distributing and controlling power to various device loads on the vehicle, outside the cab, without running high current wires from in-cab switches to the loads or splicing into existing wiring.

The RPM is connected to the BCM via the Body Builder J1939 datalink (the BCM is capable of controlling up to seven RPMs on the vehicle). The only factory-installed wires connected to the RPM are battery power for driving the loads and the datalink cable. Connectors for Body Builder-installed inputs and outputs are also provided. Power is fed to the RPM through a fusible link to the battery source. Each RPM has six independently controllable, 20 Ampere (AMP) outputs (80 maximum per RPM) with virtual (software programmable) fusing similar to the BCM. If higher current capacity is needed, two outputs can be paralleled, or the RPM can control a high current relay

while still maintaining logic and diagnostic capability without having to wire to the inside of the cab.

Because the RPM is connected to the BCM via the datalink, it also serves as an “integration gateway” to the BCM and the vehicle electrical system. Six inputs on each RPM allow information from body accessories to be communicated to the BCM and processed for interlocks, operator information/warning, etc. These inputs also allow the Body Builder to add body-mounted switches to turn on or off the same electrical devices controlled by in-cab switches.

Additional information concerning the use and installation of RPMs is contained in the applicable Feature sections that follow (see 60AAA/60AAB for detailed data on RPM connectors/pin functions, wiring, and mounting).

9.1. Remote Power Module Composite View

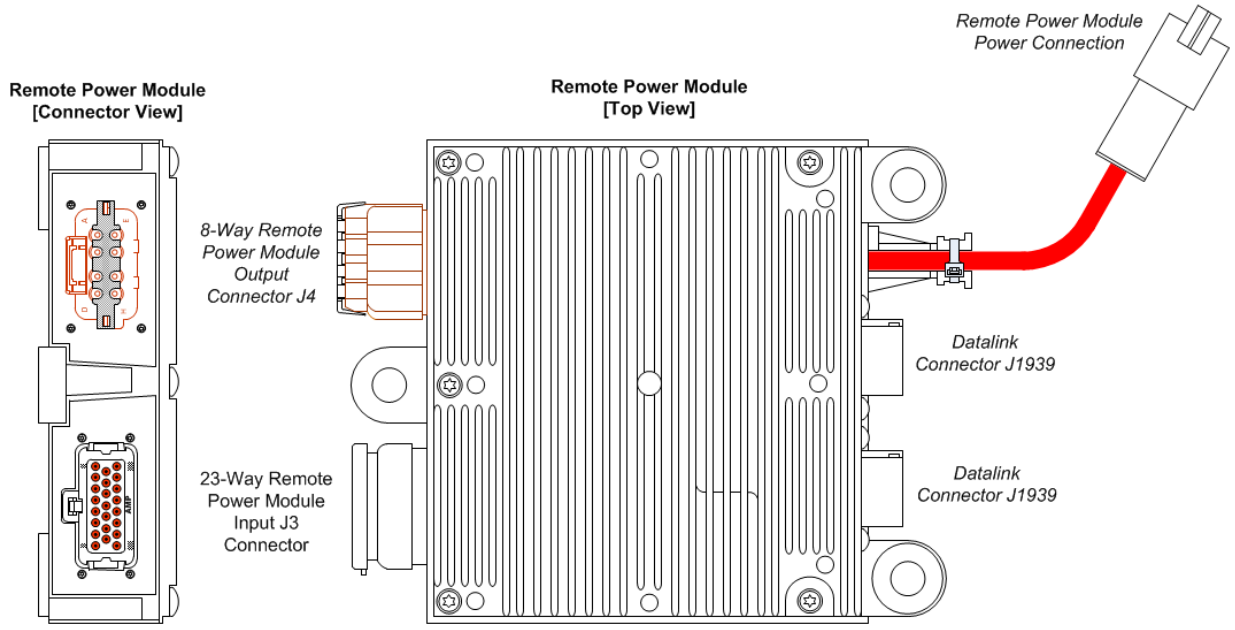

Remote Power Module End and Top Views

PART NUMBER	DESCRIPTION
2588909C95	REMOTE POWER MODULE

Remote Power Module

9.2. Remote Power Module CAN Pass-through Connector

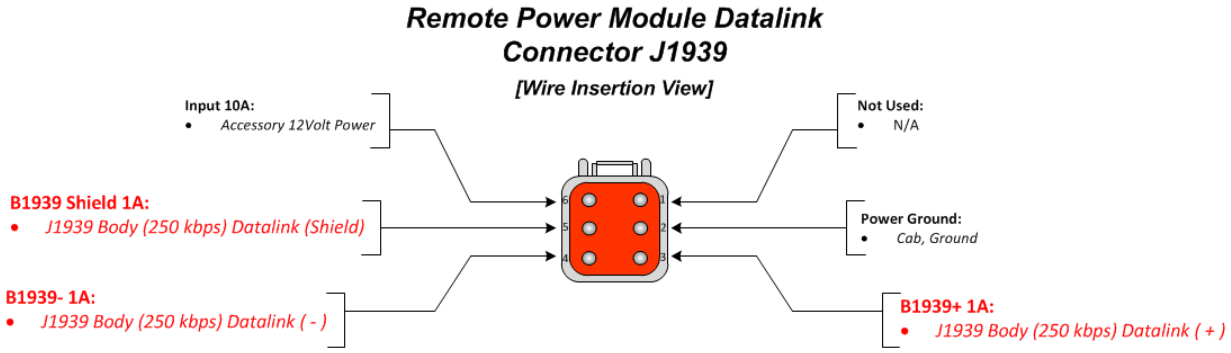

PART NUMBER	DESCRIPTION
2005240C1	6-WAY CONNECTOR
200242C1	6-WAY CONNECTOR LOCK
453133C1	CONNECTOR PLUG
2034787C1	WIRE TERMINAL 14-GAUGE
1680205C1	WIRE TERMINAL 16-GAUGE
1651988C1	WIRE TERMINAL 18-GAUGE
1651969C1	WIRE TERMINAL 20-GAUGE

Remote Power Module 6-Way J1939 Datalink Connector

9.3. Body Equipment Power Output Connector

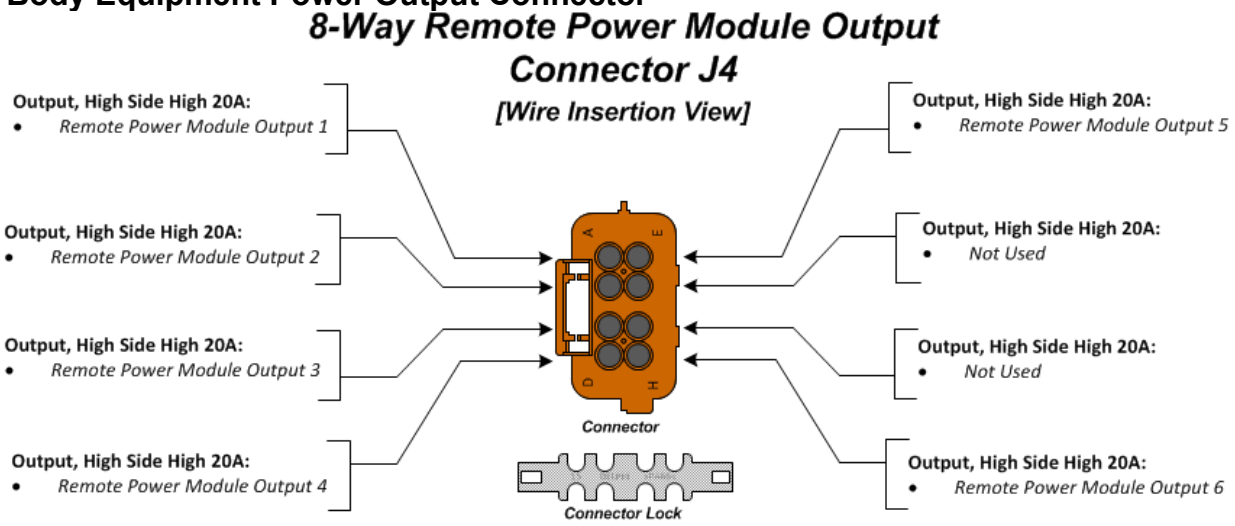

PART NUMBER	DESCRIPTION
3548934C1	8-WAY CONNECTOR
3548943C1	8-WAY CONNECTOR LOCK
2025431C1	CONNECTOR PLUG
3434163C1	WIRE TERMINAL 12-GAUGE
3935931C1	WIRE TERMINAL 14-GAUGE
3535930C1	WIRE TERMINAL 16-GAUGE
3548945C1	WIRE TERMINAL SEAL 12-GAUGE
3535937C1	WIRE TERMINAL SEAL 14-GAUGE
3535936C1	WIRE TERMINAL SEAL 16-GAUGE

Remote Power Module 8-Way Output Connector

9.4. Body Equipment Signal Input Connector

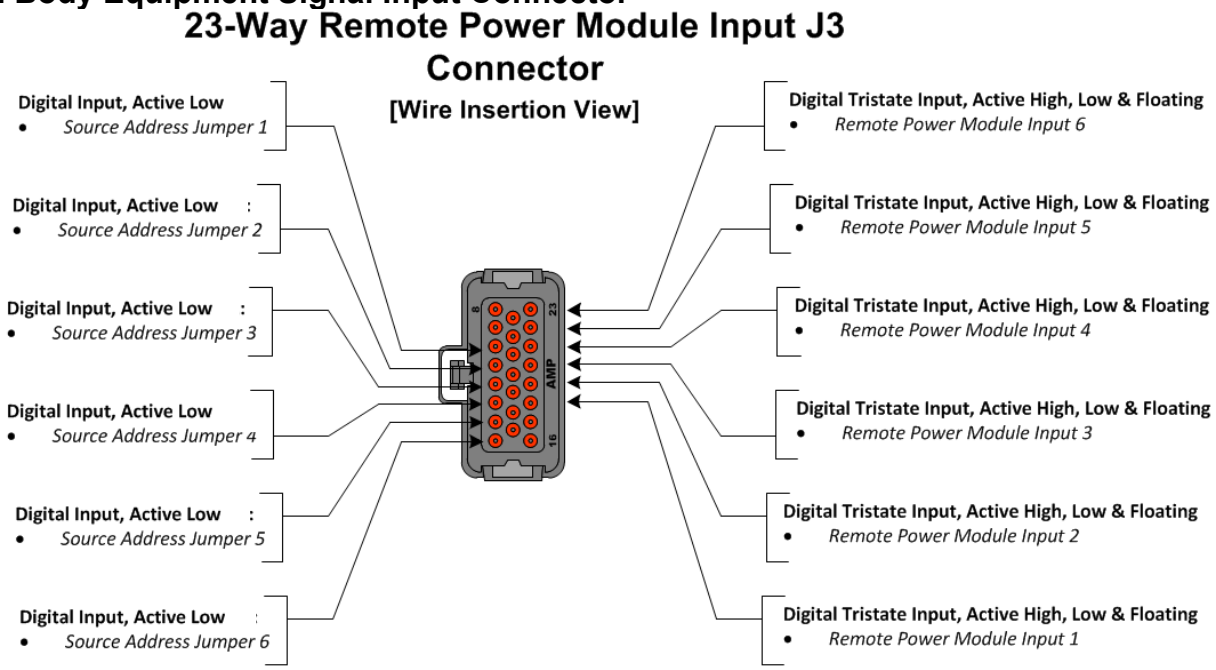

PART NUMBER	DESCRIPTION
2588914C1	23-WAY CONNECTOR
1688285C1	CONNECTOR PLUG
1698937C1	WIRE TERMINAL 16/18/20-GAUGE

Remote Power Module 23-Way Input Connector

9.5. Remote Power Module Address Jumper Locations

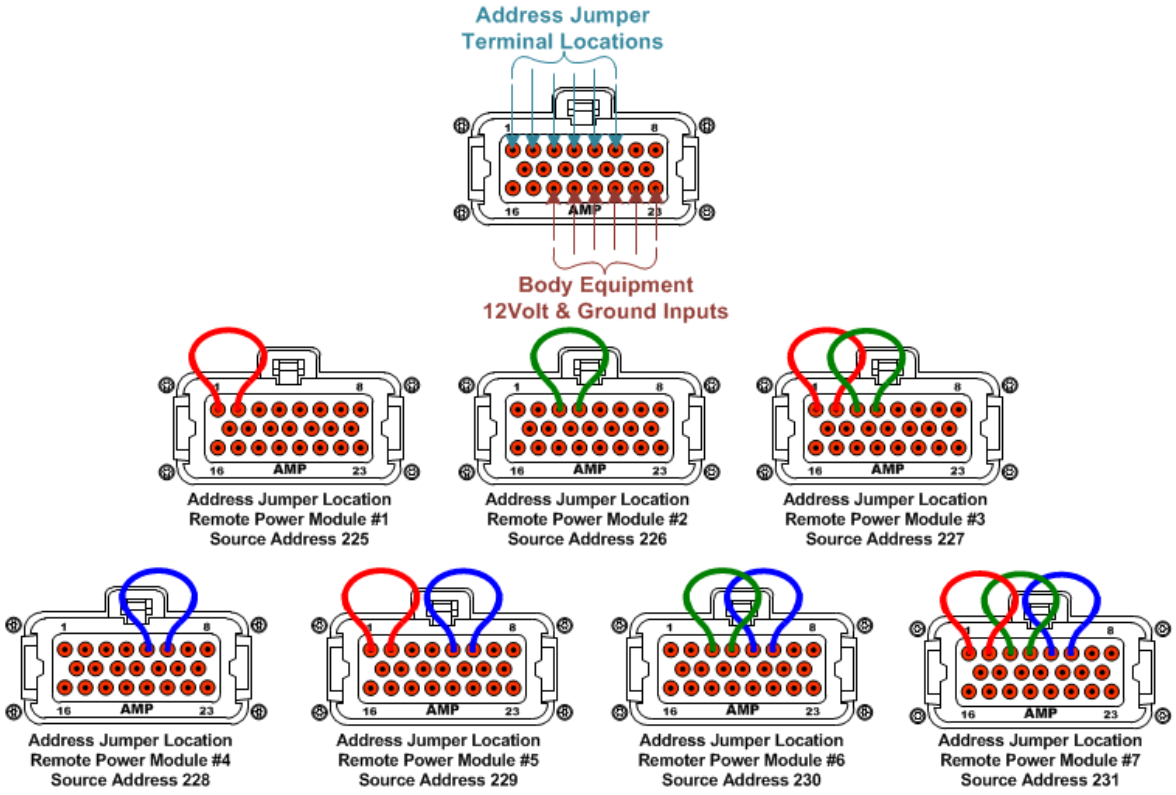

PART NUMBER	DESCRIPTION
2588908C92	ADDRESS JUMPER KIT

Remote Power Module Address Jumper Source Addressing Schemes

9.6. Remote Power Module Power Connections

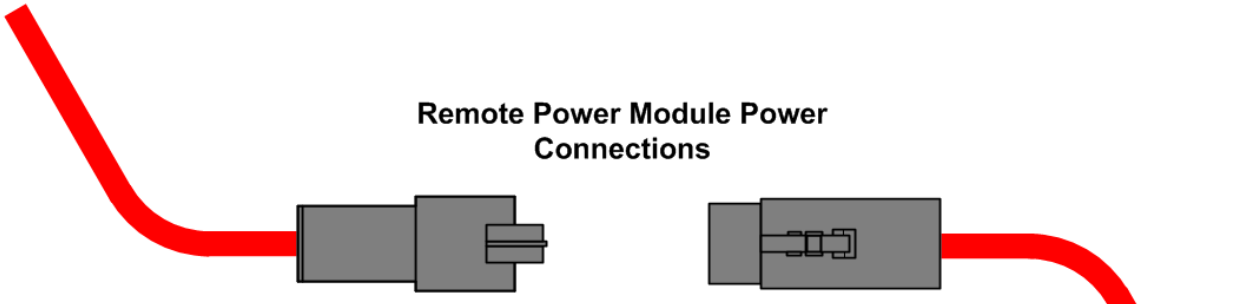

PART NUMBER	DESCRIPTION
1-Way REMOTE POWER MODULE CONNECTOR	
3517759C1	CONNECTOR
3517758C1	WIRE TERMINAL 6-GAUGE
1-WAY REMOTE POWER MODULE MATING CONNECTOR	
3517760C1	CONNECTOR
3517757C1	WIRE TERMINAL 6-GAUGE

Remote Power Module High Current Battery Connectors

10. Enhanced Remote Power Module (ERPM):

Beginning in 2025, Enhanced Remote Power Modules will gradually replace legacy Remote Power Modules in truck models, starting with HV models equipped with heavy-duty engines.

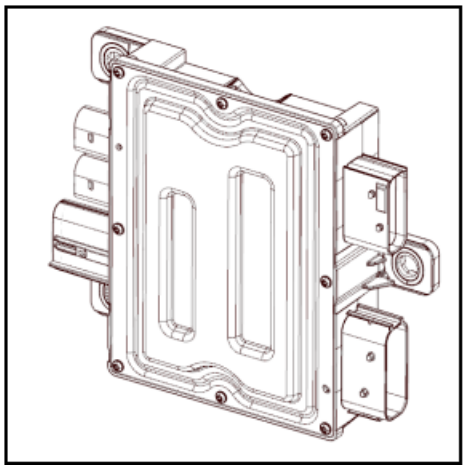

Enhanced Remote Power Module

The ERPM is not backwards compatible with the legacy Remote Power Module.

A separate Integration guide, specifically for the ERPM will be available on the Body Builder Website where this integration guide is located.

11. Instrument Panels:

11.1. Base Flat Instrument Panel:



Base Instrument Panel

Instrument Panel Overview:

- The base instrument panel configuration can accommodate up to five 6-pack module locations.
- Aux gauges will be packaged in the upper righthand corner.
- Cable shifted transmissions will have a T-handled shifter in the IP.
- Electronic transmissions will use a steering column mounted stalk shifter.
- The cab fuse and relay panel are located under the cover in front of the passenger seat.

11.2. Premium Flat Instrument Panel:



Premium Instrument Panel

Instrument Panel Overview:

- The premium instrument panel configuration can accommodate up to five 6-pack module locations.
- Aux gauges will be packaged in the upper righthand corner.
- Cable shifted transmissions will have a T-handled shifter in the IP.
- Electronic transmissions will use steering wheel mounted stalk shifter.
- The cab fuse and relay panel are located under the cover in front of the passenger seat.

11.3. Wing Instrument Panel



Wing Instrument Panel

Instrument Panel Overview:

- The wing instrument panel configuration can accommodate up to five 6-pack module locations.
- Aux gauges will be packaged in the upper righthand corner.
- Electronic transmissions will use steering wheel mounted stalk shifter.
- The cab fuse and relay panel are located under the cover in front of the passenger seat.

12. Air Conditioning

12.1. 16BAM/16ATC: Air Conditioner (International® Blend Air) with integral heater, defroster, and R134-A Refrigerant.

Extended Description: This feature provides HVAC controls for the cab environment. For Body Builders installing secondary HVAC systems for body interiors that use the chassis A/C compressor, there is no direct electrical connection point provided for tapping into the A/C clutch wire. However, if an A/C clutch connection is necessary, the Body Builder may use proper splice techniques to tap into the A/C clutch wire powered from the Body Controller (BCM). The added load required by the Body Builder should not exceed two Amperes (AMPS). This control wire shall be at battery volts when the A/C clutch is on and 0 volts when off. The software in the Body Controller (BCM) determines when the A/C clutch should be on or off based upon the mode of the HVAC controls in the cab and condenser temperatures and high side pressures of the A/C system.

System Block Diagram:

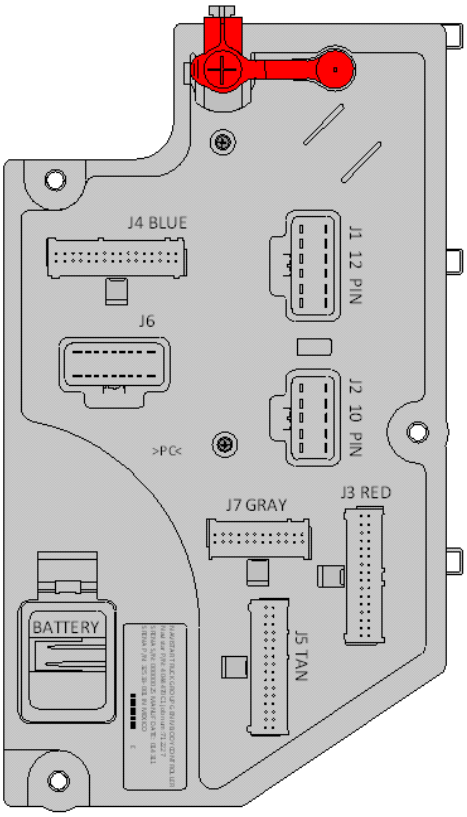

WIRING INFORMATION

WIRE GAUGE: 16 Gauge

WIRE NUMBER/COLOR: AC77A-LTGN

BC connector (1603): Pin C

How to Test This Feature:
1. Start the vehicle. Turn on air conditioner.
2. Verify that the wire feeding the body load is at battery voltage when the A/C Clutch is ON and 0-volts when OFF.
3. Ensure that no faults codes are present when the truck is on.

Note: A/C COMPRESSOR ACCOM. DUAL; FOR LOW-SPEED ACCELERATION DISABLE, FOR AFTERMARKET A/C SYSTEM

1. With Park Brake released, Air Conditioning Demand on and compressor running, accelerate from a stop. The Compressor (s) should be shut off when initial acceleration is completed.
2. The Compressor (s) should be shut off, when initial acceleration is completed.

Note: This feature uses body controller-based software controls which can be diagnosed with the Navistar® Diamond Logic® Builder software (see local dealer if not owned).

References:
Refer to the applicable International® Circuit Diagrams and Service Manuals.

13. Air Solenoid Features (Normally Open, Closed and Air Horn)

13.1. 08XKM: SWITCH, AIR HORN, PASSENGER Fire Truck Application; Switch Located in Instrument Panel (IP) Close to Passenger; Driver Also to Activate Air Horn with Lanyard.

Feature Applicability to Vehicle Platforms:

- Heavy Vocational (HV)
- Medium Vocational (MV)

Extended Description: The passenger side air horn switch provides a method for an individual to activate the vehicle air horn from the passenger seat. The feature consists of a hardwired momentary switch located in the aux gauge area in the upper right section of the center panel. The air horn can be activated by using this switch or the air horn lanyard located at the headliner above the driver side door.

System Block Diagram:

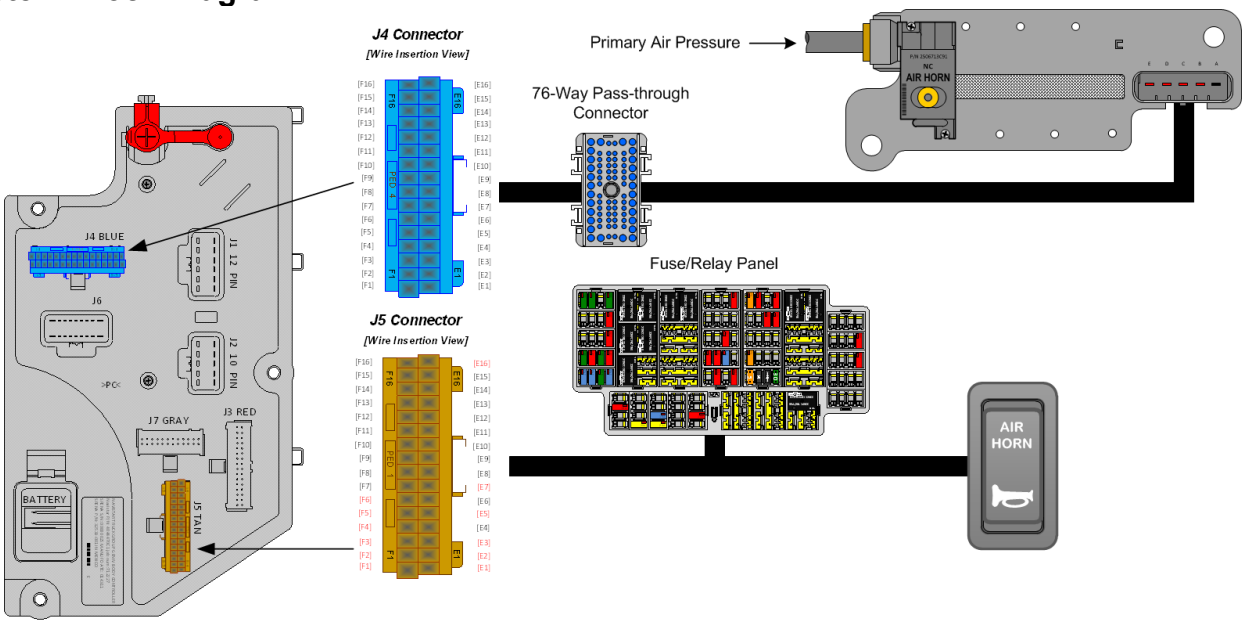

Parts Associated with This Feature:

PRT NUMBER	DESCRIPTION
MULTIPLEX SWITCH-PACK PARTS	
4057689C4	HOUSING, SWITCH 6-PACK DIN MULTIPLEX
3766678C1	SWITCH, ELECTRONIC, HARDWIRED AIR HORN
AIR SOLENOID 4-PACK PARTS	
2506713C91	KIT AIR HORN SOLENOID (NORMALLY CLOSED)
2505594C1	4-PACK AIR SOLENOID BASE

1661375C2	4-PACK AIR SOLENOID BASE 5-CAVITY CONNECTOR
1661376C1	4-PACK AIR SOLENOID BASE 5-CAVITY CONNECTOR LOCK
2033816C1	4-PACK AIR SOLENOID WIRE TERMINAL 14-GAUGE
2033819C1	4-PACK AIR SOLENOID WIRE TERMINAL 18-GAUGE
0589391C1	4-PACK AIR SOLENOID WIRE TERMINAL SEAL 14-GAUGE
2607909C1	4-PACK AIR SOLENOID WIRE TERMINAL SEAL 18-GAUGE
76-WAY CONNECTOR (THERMAL PROTECTION BARRIER PASS THROUGH)	
3574285C1	76-WAY CONNECTOR WIRE TERMINAL FEMALE 14-GUAGE
3574288C1	76-WAY CONNECTOR WIRE TERMINAL FEMALE 16-GUAGE
2003343C1	76-WAY CONNECTOR WIRE TERMINAL FEMALE 18-GUAGE
3549416C1	76-WAY CONNECTOR WIRE TERMINAL MALE 14-GUAGE
3549417C1	76-WAY CONNECTOR WIRE TERMINAL MALE 16-GUAGE
3549418C1	76-WAY CONNECTOR WIRE TERMINAL MALE 18-GUAGE
32-WAY CONNECTOR BODY CONTROL MODULE J4/J5	
3522073C1	32-WAY BODY CONTROLLER J4/J5 (1601/1602) CONNECTOR WIRE TERMINAL 18/20-GAUGE
3534303C1	32-WAY BODY CONTROLLER J4/J5 (1601/1602) CONNECTOR WIRE TERMINAL 20/22-GAUGE

Parts Associated with Air Solenoid Feature

How to Test This Feature:
1. Turn the Ignition (IGN) key to the accessory position.
2. Momentarily depress the air horn switch in the steering wheel. Note that the air horn sounds.
3. Momentarily depress the air horn rocker switch. Note that the air horn sounds.

Note: This feature uses body controller-based software controls which can be diagnosed with the Navistar® Diamond Logic® Builder software (see local dealer if not owned).

References:
Refer to the applicable International® Circuit Diagrams and Service Manuals.

13.2. 08WGA: SOLENOID, AIR for Customer Use; Provides (1) Normally Closed Pilot Air Source, Approx. 4-CFM, Includes Switch in Cab; Air Available Only with Key in “Ignition (IGN)” or “Accessory” Position; Air Will Exhaust with Key in “Off” Position.

Feature Applicability to Vehicle Platforms:
- Heavy Vocational (HV)
- Medium Vocational (MV)
- Heavy Extreme (HX) 2021 and Newer

Extended Description: 08WGA includes a normally closed pilot air solenoid for customer use. The solenoid is controlled by a 2-position latching switch in the instrument panel. The solenoid is provided 12V power through a high side relay driver output from the body controller and is mounted in a four-pack air solenoid module base mounted under cab driver side frame rail, on the passenger side frame rail mid-frame or on the passenger side frame rail near the end of frame. The location is dependent on the number of factory features ordered on the vehicle that utilize air solenoids for pilot air.

System Block Diagram:

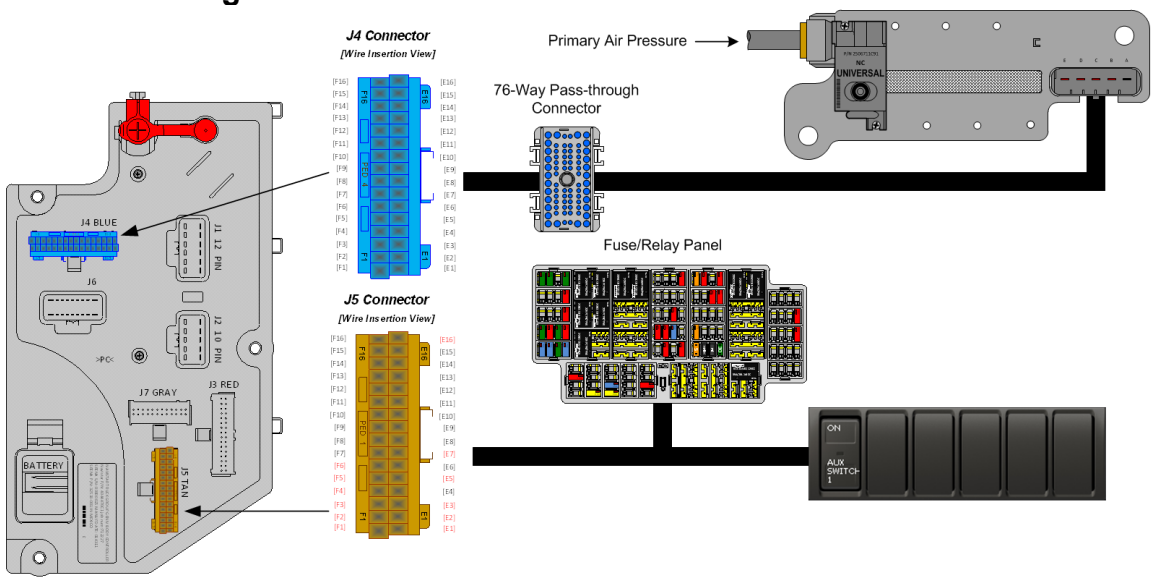

Body Controller Software Feature Codes:
597256 - BCM PROG, **AIR SOLENOID MODULE #1 NORMALLY CLOSED**

Parts Associated with This Feature:

PART NUMBER	DESCRIPTION
MULTIPLEX SWITCH-PACK PARTS	
4057689C4	HOUSING, SWITCH 6-PACK DIN MULTIPLEX
4102431C1	2-POSITION BISTABLE “LATCHING” SWITCH ACTUATOR
AIR SOLENOID 4-PACK PARTS	
2506711C91	KIT, AIR UNIVERSAL SOLENOID (NORMALLY CLOSED)
2505594C1	4-PACK AIR SOLENOID BASE
1661375C2	4-PACK AIR SOLENOID BASE 5-CAVITY CONNECTOR
1661376C1	4-PACK AIR SOLENOID BASE 5-CAVITY CONNECTOR LOCK
2033816C1	4-PACK AIR SOLENOID WIRE TERMINAL 14-GAUGE
2033819C1	4-PACK AIR SOLENOID WIRE TERMINAL 18-GAUGE

0589391C1	4-PACK AIR SOLENOID WIRE TERMINAL SEAL 14-GAUGE
2607909C1	4-PACK AIR SOLENOID WIRE TERMINAL SEAL 18-GAUGE
76-WAY CONNECTOR (THERMAL PROTECTION BARRIER PASS THROUGH)	
3574285C1	76-WAY CONNECTOR WIRE TERMINAL FEMALE 14-GUAGE
3574288C1	76-WAY CONNECTOR WIRE TERMINAL FEMALE 16-GUAGE
2003343C1	76-WAY CONNECTOR WIRE TERMINAL FEMALE 18-GUAGE
3549416C1	76-WAY CONNECTOR WIRE TERMINAL MALE 14-GUAGE
3549417C1	76-WAY CONNECTOR WIRE TERMINAL MALE 16-GUAGE
3549418C1	76-WAY CONNECTOR WIRE TERMINAL MALE 18-GUAGE
32-WAY CONNECTOR BODY CONTROL MODULE J4/J5	
3522073C1	32-WAY BODY CONTROLLER J4/J5 (1601/1602) CONNECTOR WIRE TERMINAL 18/20-GAUGE
3534303C1	32-WAY BODY CONTROLLER J4/J5 (1601/1602) CONNECTOR WIRE TERMINAL 20/22-GAUGE

Parts Associated with Air Solenoid Feature

How to Test This Feature:
This procedure can be used for each auxiliary air solenoid added to the vehicle.
1. Activate the in-cab auxiliary air solenoid switch.
2. Verify that the particular air solenoid either provides air pressure for normally closed or exhausts the air for normally open solenoids.
3. Verify that the proper pin in the air solenoid 4-pack connector has battery voltage.
4. Pin A for all air solenoids should have continuity with the negative battery stud.

Note: This feature uses body controller-based software controls which can be diagnosed with the Navistar® Diamond Logic® Builder software (see local dealer if not owned).

References:
Refer to the applicable International® Circuit Diagrams and Service Manuals

13.3. 08WGB: SOLENOID, AIR for Customer Use; Provides (2) Normally Closed Pilot Air Source, Approx. 4-CFM, Includes Switch in Cab; Air Available Only with Key in “IGN” or “Accessory” Position; Air Will Exhaust with Key in “Off” Position.

Feature Applicability to Vehicle Platforms:
- Heavy Vocational (HV)
- Medium Vocational (MV)
- Heavy Extreme (HX) 2021 and Newer

Extended Description: 08WGB includes two normally closed pilot air solenoids for customer use. The solenoids are each individually controlled by 2-position latching

switches in the instrument panel. The solenoids are provided 12V power through high side relay driver outputs from the body controller and are mounted in one or more four-pack air solenoid module bases mounted under cab driver side frame rail, on the passenger side frame rail mid-frame or on the passenger side frame rail near the end of frame. The locations are dependent on the number of factory features ordered on the vehicle that utilize air solenoids for pilot air.

System Block Diagram:

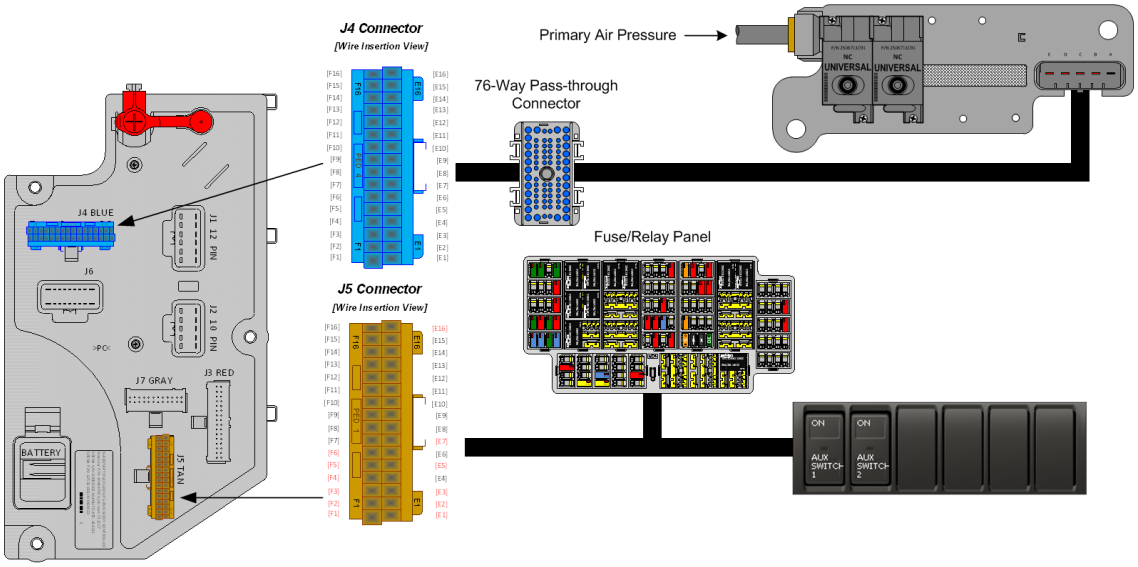

Body Controller Software Feature Codes:
597257 - BCM PROG, **AIR SOLENOID MOD #2 CLOSED**

Parts Associated with This Feature:

PART NUMBER	DESCRIPTION
MULTIPLEX SWITCH-PACK PARTS	
4057689C4	HOUSING, SWITCH 6-PACK DIN MULTIPLEX
4102431C1	2-POSITION BISTABLE “LATCHING” SWITCH ACTUATOR
AIR SOLENOID 4-PACK PARTS	
2506711C91	KIT, AIR UNIVERSAL SOLENOID (NORMALLY CLOSED)
2505594C1	4-PACK AIR SOLENOID BASE
1661375C2	4-PACK AIR SOLENOID BASE 5-CAVITY CONNECTOR
1661376C1	4-PACK AIR SOLENOID BASE 5-CAVITY CONNECTOR LOCK
2033816C1	4-PACK AIR SOLENOID WIRE TERMINAL 14-GAUGE
2033819C1	4-PACK AIR SOLENOID WIRE TERMINAL 18-GAUGE
0589391C1	4-PACK AIR SOLENOID WIRE TERMINAL SEAL 14-GAUGE
2607909C1	4-PACK AIR SOLENOID WIRE TERMINAL SEAL 18-GAUGE
76-WAY CONNECTOR (THERMAL PROTECTION BARRIER PASS THROUGH)	

3574285C1	76-WAY CONNECTOR WIRE TERMINAL FEMALE 14-GUAGE
3574288C1	76-WAY CONNECTOR WIRE TERMINAL FEMALE 16-GUAGE
2003343C1	76-WAY CONNECTOR WIRE TERMINAL FEMALE 18-GUAGE
3549416C1	76-WAY CONNECTOR WIRE TERMINAL MALE 14-GUAGE
3549417C1	76-WAY CONNECTOR WIRE TERMINAL MALE 16-GUAGE
3549418C1	76-WAY CONNECTOR WIRE TERMINAL MALE 18-GUAGE
32-WAY CONNECTOR BODY CONTROL MODULE J4/J5	
3522073C1	32-WAY BODY CONTROLLER J4/J5 (1601/1602) CONNECTOR WIRE TERMINAL 18/20-GAUGE
3534303C1	32-WAY BODY CONTROLLER J4/J5 (1601/1602) CONNECTOR WIRE TERMINAL 20/22-GAUGE

Parts Associated with Air Solenoid Feature

How to Test This Feature:
This procedure can be used for each auxiliary air solenoid added to the vehicle.
1. Activate the in-cab auxiliary air solenoid switch.
2. Verify that the particular air solenoid either provides air pressure for normally closed or exhausts the air for normally open solenoids.
3. Verify that the proper pin in the air solenoid 4-pack connector has battery voltage.
4. Pin A for all air solenoids should have continuity with the negative battery stud.

Note: This feature uses body controller-based software controls which can be diagnosed with the Navistar® Diamond Logic® Builder software (see local dealer if not owned).

References:
Refer to the applicable International® Circuit Diagrams and Service Manuals

13.4. 08WGC: SOLENOID, AIR for Customer Use; Provides (3) Normally Closed Pilot Air Source, Approx. 4-CFM, Includes Switch in Cab; Air Available Only with Key in “IGN” or “Accessory” Position; Air Will Exhaust with Key in “Off” Position.

Feature Applicability to Vehicle Platforms:
- Heavy Vocational (HV)
- Medium Vocational (MV)
- Heavy Extreme (HX) 2021 and Newer

Extended Description: 08WGC includes three normally closed pilot air solenoids for customer use. The solenoids are each individually controlled by 2-position latching switches in the instrument panel. The solenoids are provided 12V power through high side relay driver outputs from the body controller and are mounted in one or more four-pack air solenoid module bases mounted under cab driver side frame rail, on the passenger side frame rail mid-frame or on the passenger side frame rail near the end of frame. The locations are dependent on the number of factory features ordered on the vehicle that utilize air solenoids for pilot air.

System Block Diagram:

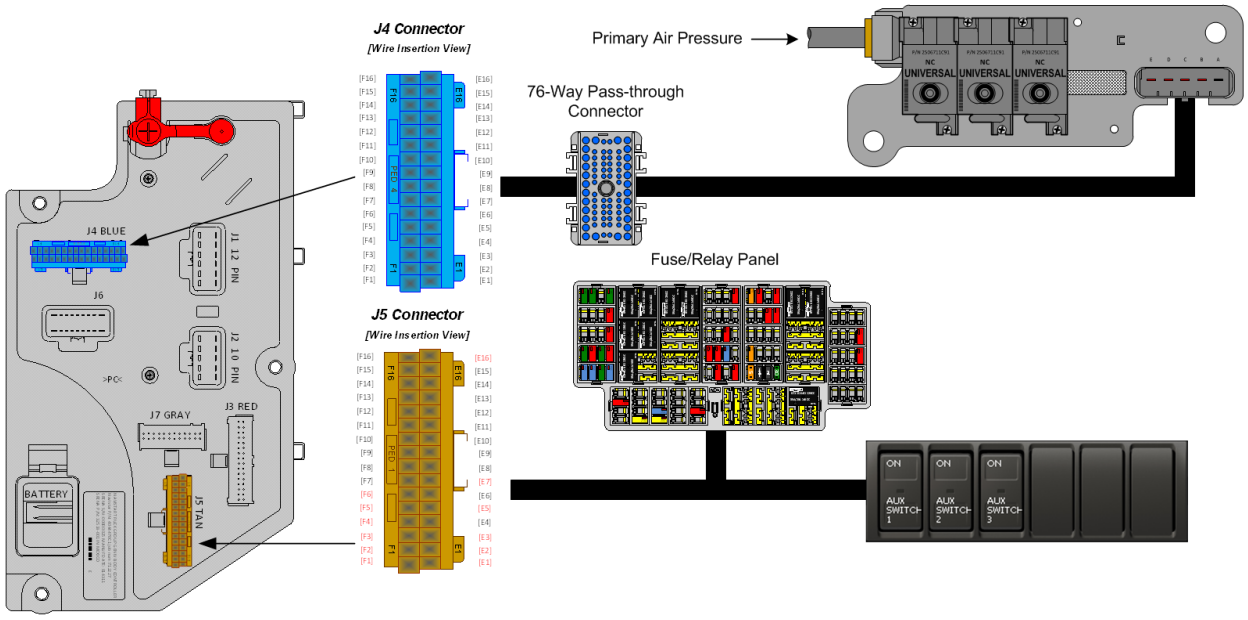

Body Controller Software Feature Codes:
597258 - BCM PROG, **AIR SOLENOID MOD #3 CLOSED**

Parts Associated with This Feature:

PART NUMBER	DESCRIPTION
MULTIPLEX SWITCH-PACK PARTS	
4057689C4	HOUSING, SWITCH 6-PACK DIN MULTIPLEX
4102431C1	2-POSITION BISTABLE “LATCHING” SWITCH ACTUATOR
AIR SOLENOID 4-PACK PARTS	
2506711C91	KIT, AIR UNIVERSAL SOLENOID (NORMALLY CLOSED)
2505594C1	4-PACK AIR SOLENOID BASE
1661375C2	4-PACK AIR SOLENOID BASE 5-CAVITY CONNECTOR
1661376C1	4-PACK AIR SOLENOID BASE 5-CAVITY CONNECTOR LOCK
2033816C1	4-PACK AIR SOLENOID WIRE TERMINAL 14-GAUGE
2033819C1	4-PACK AIR SOLENOID WIRE TERMINAL 18-GAUGE

0589391C1	4-PACK AIR SOLENOID WIRE TERMINAL SEAL 14-GAUGE
2607909C1	4-PACK AIR SOLENOID WIRE TERMINAL SEAL 18-GAUGE
76-WAY CONNECTOR (THERMAL PROTECTION BARRIER PASS THROUGH)	
3574285C1	76-WAY CONNECTOR WIRE TERMINAL FEMALE 14-GUAGE
3574288C1	76-WAY CONNECTOR WIRE TERMINAL FEMALE 16-GUAGE
2003343C1	76-WAY CONNECTOR WIRE TERMINAL FEMALE 18-GUAGE
3549416C1	76-WAY CONNECTOR WIRE TERMINAL MALE 14-GUAGE
3549417C1	76-WAY CONNECTOR WIRE TERMINAL MALE 16-GUAGE
3549418C1	76-WAY CONNECTOR WIRE TERMINAL MALE 18-GUAGE
32-WAY CONNECTOR BODY CONTROL MODULE J4/J5	
3522073C1	32-WAY BODY CONTROLLER J4/J5 (1601/1602) CONNECTOR WIRE TERMINAL 18/20-GAUGE
3534303C1	32-WAY BODY CONTROLLER J4/J5 (1601/1602) CONNECTOR WIRE TERMINAL 20/22-GAUGE

Parts Associated with Air Solenoid Feature

How to Test This Feature:
This procedure can be used for each auxiliary air solenoid added to the vehicle.
1. Activate the in-cab auxiliary air solenoid switch.
2. Verify that the particular air solenoid either provides air pressure for normally closed or exhausts the air for normally open solenoids.
3. Verify that the proper pin in the air solenoid 4-pack connector has battery voltage.
4. Pin A for all air solenoids should have continuity with the negative battery stud.

Note: This feature uses body controller-based software controls which can be diagnosed with the Navistar® Diamond Logic® Builder software (see local dealer if not owned).

References:
Refer to the applicable International® Circuit Diagrams and Service Manuals

13.5. 08WGD: SOLENOID, AIR for Customer Use; Provides (4) Normally Closed Pilot Air Source, Approx. 4-CFM, Includes Switch in Cab; Air Available Only with Key in “IGN” or “Accessory” Position; Air Will Exhaust with Key in “Off” Position.

Feature Applicability to Vehicle Platforms:
- Heavy Vocational (HV)
- Medium Vocational (MV)
- Heavy Extreme (HX) 2021 and Newer

Extended Description: 08WGD includes four normally closed pilot air solenoids for customer use. The solenoids are each individually controlled by 2-position latching switches in the instrument panel. The solenoids are provided 12V power through high side relay driver outputs from the body controller and are mounted in one or more four-pack air solenoid module bases mounted under cab driver side frame rail, on the passenger side frame rail mid-frame or on the passenger side frame rail near the end of frame. The locations are dependent on the number of factory features ordered on the vehicle that utilize air solenoids for pilot air.

System Block Diagram:

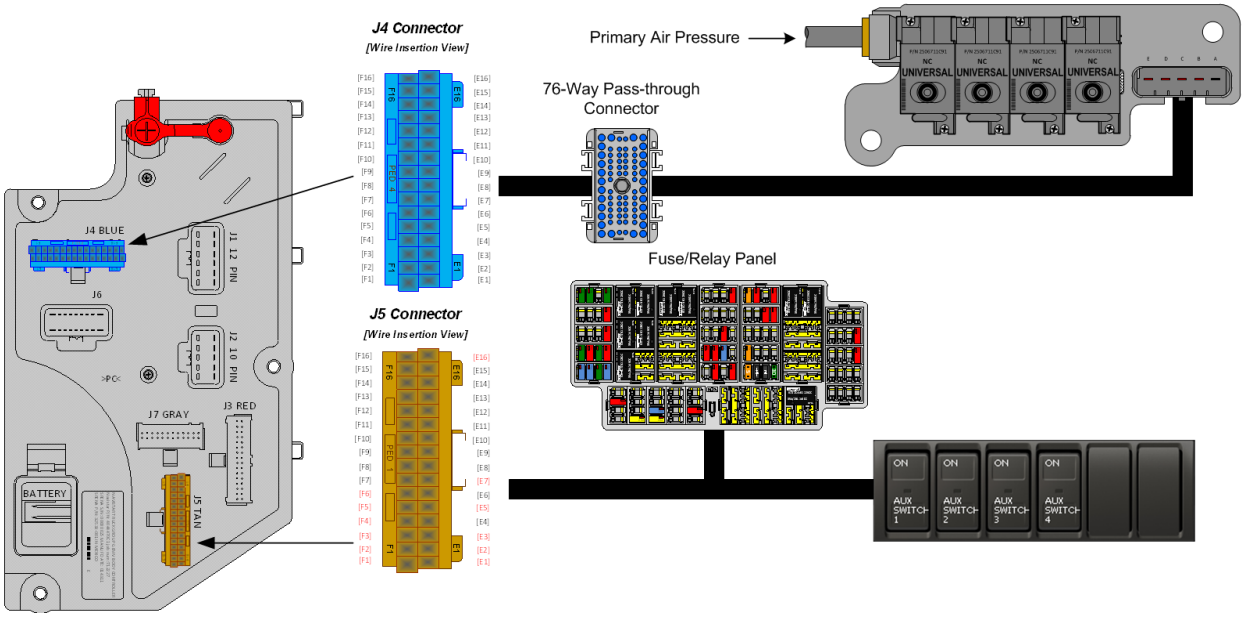

Body Controller Software Feature Codes:
597303 - BCM PROG, **AIR SOLENOID MOD #4 CLOSED**

Parts Associated with This Feature:

PART NUMBER	DESCRIPTION
MULTIPLEX SWITCH-PACK PARTS	
4057689C4	HOUSING, SWITCH 6-PACK DIN MULTIPLEX
4102431C1	2-POSITION BISTABLE “LATCHING” SWITCH ACTUATOR
AIR SOLENOID 4-PACK PARTS	
2506711C91	KIT, AIR UNIVERSAL SOLENOID (NORMALLY CLOSED)
2505594C1	4-PACK AIR SOLENOID BASE
1661375C2	4-PACK AIR SOLENOID BASE 5-CAVITY CONNECTOR
1661376C1	4-PACK AIR SOLENOID BASE 5-CAVITY CONNECTOR LOCK
2033816C1	4-PACK AIR SOLENOID WIRE TERMINAL 14-GAUGE
2033819C1	4-PACK AIR SOLENOID WIRE TERMINAL 18-GAUGE

0589391C1	4-PACK AIR SOLENOID WIRE TERMINAL SEAL 14-GAUGE
2607909C1	4-PACK AIR SOLENOID WIRE TERMINAL SEAL 18-GAUGE
76-WAY CONNECTOR (THERMAL PROTECTION BARRIER PASS THROUGH)	
3574285C1	76-WAY CONNECTOR WIRE TERMINAL FEMALE 14-GUAGE
3574288C1	76-WAY CONNECTOR WIRE TERMINAL FEMALE 16-GUAGE
2003343C1	76-WAY CONNECTOR WIRE TERMINAL FEMALE 18-GUAGE
3549416C1	76-WAY CONNECTOR WIRE TERMINAL MALE 14-GUAGE
3549417C1	76-WAY CONNECTOR WIRE TERMINAL MALE 16-GUAGE
3549418C1	76-WAY CONNECTOR WIRE TERMINAL MALE 18-GUAGE
32-WAY CONNECTOR BODY CONTROL MODULE J4/J5	
3522073C1	32-WAY BODY CONTROLLER J4/J5 (1601/1602) CONNECTOR WIRE TERMINAL 18/20-GAUGE
3534303C1	32-WAY BODY CONTROLLER J4/J5 (1601/1602) CONNECTOR WIRE TERMINAL 20/22-GAUGE

Parts Associated with Air Solenoid Feature

How to Test This Feature:
This procedure can be used for each auxiliary air solenoid added to the vehicle.
1. Activate the in-cab auxiliary air solenoid switch.
2. Verify that the particular air solenoid either provides air pressure for normally closed or exhausts the air for normally open solenoids.
3. Verify that the proper pin in the air solenoid 4-pack connector has battery voltage.
4. Pin A for all air solenoids should have continuity with the negative battery stud.

Note: This feature uses body controller-based software controls which can be diagnosed with the Navistar® Diamond Logic® Builder software (see local dealer if not owned).

References:
Refer to the applicable International® Circuit Diagrams and Service Manuals

13.6. 08WGP: SOLENOID, AIR for Customer Use; Provides (5) Normally Open Pilot Air Source, Approx. 4-CFM, Includes Switch in Cab; Air Exhausted Only with Key in “IGN” or “Accessory” Position; Air Will be Supplied with Key in “Off” Position.

Feature Applicability to Vehicle Platforms:

- Heavy Vocational (HV)
- Medium Vocational (MV)
- Heavy Extreme (HX) 2021 and Newer

Extended Description: 08WGP includes five normally open pilot air solenoids for customer use. The solenoids are each individually controlled by 2-position latching switches in the instrument panel. The solenoids are provided 12V power through high side relay driver outputs from the body controller and are mounted in one or more four-pack air solenoid module bases mounted under cab driver side frame rail, on the passenger side frame rail mid-frame or on the passenger side frame rail near the end of frame. The locations are dependent on the number of factory features ordered on the vehicle that utilize air solenoids for pilot air.

System Block Diagram:

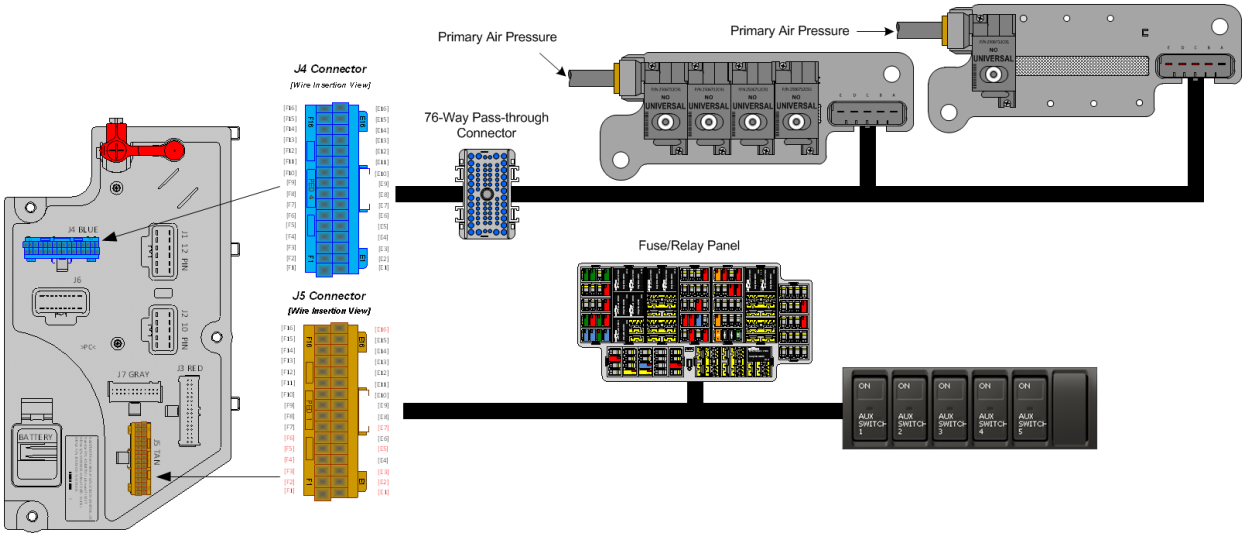

Body Controller Software Feature Codes:
597262 - BCM PROG, AIR SOLENOID MOD #5 OPEN

Parts Associated with This Feature:

PART NUMBER	DESCRIPTION
MULTIPLEX SWITCH-PACK PARTS	
4057689C4	HOUSING, SWITCH 6-PACK DIN MULTIPLEX
4102431C1	2-POSITION BISTABLE “LATCHING” SWITCH ACTUATOR

AIR SOLENOID 4-PACK PARTS	
2506712C91	KIT, AIR UNIVERSAL SOLENOID (NORMALLY OPEN)
2505594C1	4-PACK AIR SOLENOID BASE
1661375C2	4-PACK AIR SOLENOID BASE 5-CAVITY CONNECTOR
1661376C1	4-PACK AIR SOLENOID BASE 5-CAVITY CONNECTOR LOCK
2033816C1	4-PACK AIR SOLENOID WIRE TERMINAL 14-GAUGE
2033819C1	4-PACK AIR SOLENOID WIRE TERMINAL 18-GAUGE
0589391C1	4-PACK AIR SOLENOID WIRE TERMINAL SEAL 14-GAUGE
2607909C1	4-PACK AIR SOLENOID WIRE TERMINAL SEAL 18-GAUGE
76-WAY CONNECTOR (THERMAL PROTECTION BARRIER PASS THROUGH)	
3574285C1	76-WAY CONNECTOR WIRE TERMINAL FEMALE 14-GUAGE
3574288C1	76-WAY CONNECTOR WIRE TERMINAL FEMALE 16-GUAGE
2003343C1	76-WAY CONNECTOR WIRE TERMINAL FEMALE 18-GUAGE
3549416C1	76-WAY CONNECTOR WIRE TERMINAL MALE 14-GUAGE
3549417C1	76-WAY CONNECTOR WIRE TERMINAL MALE 16-GUAGE
3549418C1	76-WAY CONNECTOR WIRE TERMINAL MALE 18-GUAGE
32-WAY CONNECTOR BODY CONTROL MODULE J4/J5	
3522073C1	32-WAY BODY CONTROLLER J4/J5 (1601/1602) CONNECTOR WIRE TERMINAL 18/20-GAUGE
3534303C1	32-WAY BODY CONTROLLER J4/J5 (1601/1602) CONNECTOR WIRE TERMINAL 20/22-GAUGE

Parts Associated with Air Solenoid Feature

How to Test This Feature:
This procedure can be used for each auxiliary air solenoid added to the vehicle.
1. Activate the in-cab auxiliary air solenoid switch.
2. Verify that the particular air solenoid either provides air pressure for normally closed or exhausts the air for normally open solenoids.
3. Verify that the proper pin in the air solenoid 4-pack connector has battery voltage.
4. Pin A for all air solenoids should have continuity with the negative battery stud.

Note: This feature uses body controller-based software controls which can be diagnosed with the Navistar® Diamond Logic® Builder software (see local dealer if not owned).

References:
Refer to the applicable International® Circuit Diagrams and Service Manuals

13.7. 08WGR: SOLENOID, AIR for Customer Use; Provides (6) Normally Open Pilot Air Source, Approx. 4-CFM, Includes Switch in Cab; Air Exhausted Only with Key in “IGN” or “Accessory” Position; Air Will be Supplied with Key in “Off” Position.

Feature Applicability to Vehicle Platforms:

- Heavy Vocational (HV)
- Medium Vocational (MV)
- Heavy Extreme (HX) 2021 and Newer

Extended Description: 08WGR includes six normally open pilot air solenoids for customer use. The solenoids are each individually controlled by 2-position latching switches in the instrument panel. The solenoids are provided 12V power through high side relay driver outputs from the body controller and are mounted in one or more four-pack air solenoid module bases mounted under cab driver side frame rail, on the passenger side frame rail mid-frame or on the passenger side frame rail near the end of frame. The locations are dependent on the number of factory features ordered on the vehicle that utilize air solenoids for pilot air.

System Block Diagram:

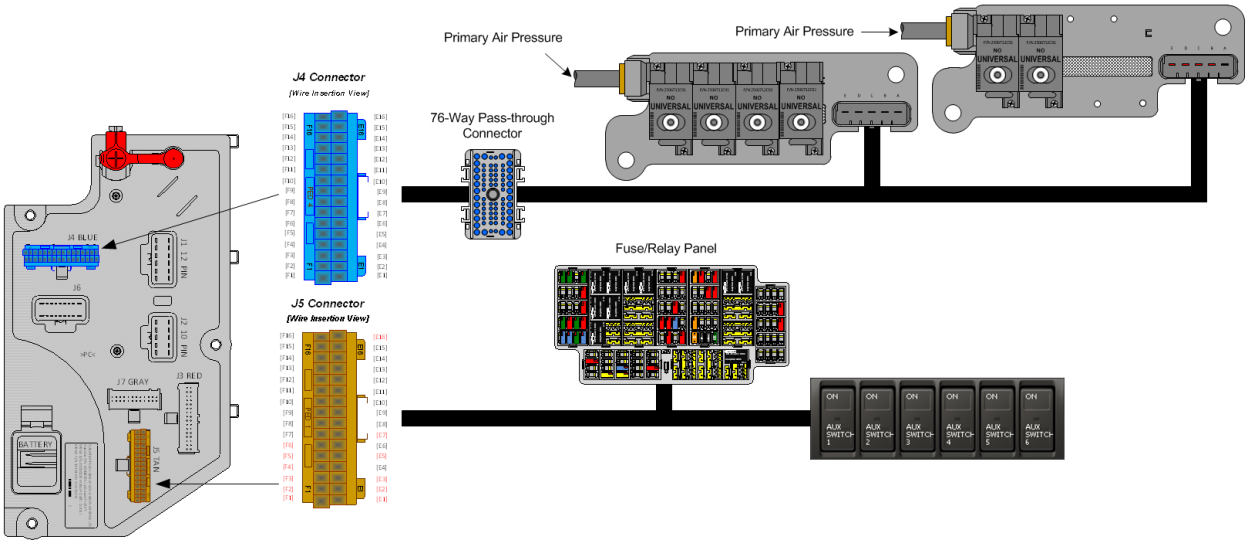

Body Controller Software Feature Codes:
597261 - BCM PROG, AIR SOLENOID MOD #6 OPEN

Parts Associated with This Feature:

PART NUMBER	DESCRIPTION
MULTIPLEX SWITCH-PACK PARTS	
4057689C4	HOUSING, SWITCH 6-PACK DIN MULTIPLEX
4102431C1	2-POSITION BISTABLE “LATCHING” SWITCH ACTUATOR
AIR SOLENOID 4-PACK PARTS	
2506712C91	KIT, AIR UNIVERSAL SOLENOID (NORMALLY OPEN)

2505594C1	4-PACK AIR SOLENOID BASE
1661375C2	4-PACK AIR SOLENOID BASE 5-CAVITY CONNECTOR
1661376C1	4-PACK AIR SOLENOID BASE 5-CAVITY CONNECTOR LOCK
2033816C1	4-PACK AIR SOLENOID WIRE TERMINAL 14-GAUGE
2033819C1	4-PACK AIR SOLENOID WIRE TERMINAL 18-GAUGE
0589391C1	4-PACK AIR SOLENOID WIRE TERMINAL SEAL 14-GAUGE
2607909C1	4-PACK AIR SOLENOID WIRE TERMINAL SEAL 18-GAUGE
76-WAY CONNECTOR (THERMAL PROTECTION BARRIER PASS THROUGH)	
3574285C1	76-WAY CONNECTOR WIRE TERMINAL FEMALE 14-GUAGE
3574288C1	76-WAY CONNECTOR WIRE TERMINAL FEMALE 16-GUAGE
2003343C1	76-WAY CONNECTOR WIRE TERMINAL FEMALE 18-GUAGE
3549416C1	76-WAY CONNECTOR WIRE TERMINAL MALE 14-GUAGE
3549417C1	76-WAY CONNECTOR WIRE TERMINAL MALE 16-GUAGE
3549418C1	76-WAY CONNECTOR WIRE TERMINAL MALE 18-GUAGE
32-WAY CONNECTOR BODY CONTROL MODULE J4/J5	
3522073C1	32-WAY BODY CONTROLLER J4/J5 (1601/1602) CONNECTOR WIRE TERMINAL 18/20-GAUGE
3534303C1	32-WAY BODY CONTROLLER J4/J5 (1601/1602) CONNECTOR WIRE TERMINAL 20/22-GAUGE

Parts Associated with Air Solenoid Feature

How to Test This Feature:
This procedure can be used for each auxiliary air solenoid added to the vehicle.
1. Activate the in-cab auxiliary air solenoid switch.
2. Verify that the particular air solenoid either provides air pressure for normally closed or exhausts the air for normally open solenoids.
3. Verify that the proper pin in the air solenoid 4-pack connector has battery voltage.
4. Pin A for all air solenoids should have continuity with the negative battery stud.

Note: This feature uses body controller-based software controls which can be diagnosed with the Navistar® Diamond Logic® Builder software (see local dealer if not owned).

References:
Refer to the applicable International® Circuit Diagrams and Service Manuals

13.8. 08WKM: SOLENOID, AIR for Customer Use; Provides (6) Normally Closed Pilot Air Source, Approx. 4-CFM, Includes Switch in Cab; Air Available Only with Key in “Ignition” or “Accessory” Position; Air Will Exhaust with key in “Off” Position.

Feature Applicability to Vehicle Platforms:

- Heavy Vocational (HV)
- Medium Vocational (MV)
- Heavy Extreme (HX) 2021 and Newer

Extended Description: 08WKM includes six normally closed pilot air solenoids for customer use. The solenoids are each individually controlled by 2-position latching switches in the instrument panel. The solenoids are provided 12V power through high side relay driver outputs from the body controller and are mounted in one or more four-pack air solenoid module bases mounted under cab driver side frame rail, on the passenger side frame rail mid-frame or on the passenger side frame rail near the end of frame. The locations are dependent on the number of factory features ordered on the vehicle that utilize air solenoids for pilot air.

System Block Diagram:

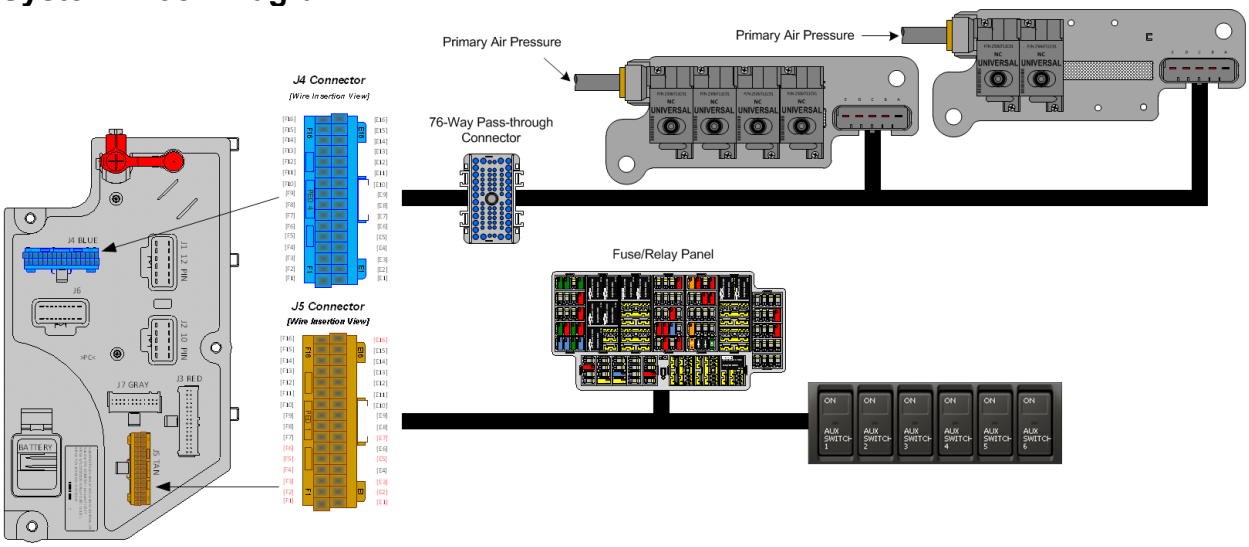

Body Controller Software Feature Codes:
597259 - BCM PROG, AIR SOLENOID MOD #6 CLOSED

Parts Associated with This Feature:

PART NUMBER	DESCRIPTION
MULTIPLEX SWITCH-PACK PARTS	

4057689C4	HOUSING, SWITCH 6-PACK DIN MULTIPLEX
4102431C1	2-POSITION BISTABLE “LATCHING” SWITCH ACTUATOR
AIR SOLENOID 4-PACK PARTS	
2506711C91	KIT, AIR UNIVERSAL SOLENOID (NORMALLY CLOSED)
2505594C1	4-PACK AIR SOLENOID BASE
1661375C2	4-PACK AIR SOLENOID BASE 5-CAVITY CONNECTOR
1661376C1	4-PACK AIR SOLENOID BASE 5-CAVITY CONNECTOR LOCK
2033816C1	4-PACK AIR SOLENOID WIRE TERMINAL 14-GAUGE
2033819C1	4-PACK AIR SOLENOID WIRE TERMINAL 18-GAUGE
0589391C1	4-PACK AIR SOLENOID WIRE TERMINAL SEAL 14-GAUGE
2607909C1	4-PACK AIR SOLENOID WIRE TERMINAL SEAL 18-GAUGE
76-WAY CONNECTOR (THERMAL PROTECTION BARRIER PASS THROUGH)	
3574285C1	76-WAY CONNECTOR WIRE TERMINAL FEMALE 14-GUAGE
3574288C1	76-WAY CONNECTOR WIRE TERMINAL FEMALE 16-GUAGE
2003343C1	76-WAY CONNECTOR WIRE TERMINAL FEMALE 18-GUAGE
3549416C1	76-WAY CONNECTOR WIRE TERMINAL MALE 14-GUAGE
3549417C1	76-WAY CONNECTOR WIRE TERMINAL MALE 16-GUAGE
3549418C1	76-WAY CONNECTOR WIRE TERMINAL MALE 18-GUAGE
32-WAY CONNECTOR BODY CONTROL MODULE J4/J5	
3522073C1	32-WAY BODY CONTROLLER J4/J5 (1601/1602) CONNECTOR WIRE TERMINAL 18/20-GAUGE
3534303C1	32-WAY BODY CONTROLLER J4/J5 (1601/1602) CONNECTOR WIRE TERMINAL 20/22-GAUGE

Parts Associated with Air Solenoid Feature

How to Test This Feature:
This procedure can be used for each auxiliary air solenoid added to the vehicle.
1. Activate the in-cab auxiliary air solenoid switch.
2. Verify that the particular air solenoid either provides air pressure for normally closed or exhausts the air for normally open solenoids.
3. Verify that the proper pin in the air solenoid 4-pack connector has battery voltage.
4. Pin A for all air solenoids should have continuity with the negative battery stud.

Note: This feature uses body controller-based software controls which can be diagnosed with the Navistar® Diamond Logic® Builder software (see local dealer if not owned).

References:
Refer to the applicable International® Circuit Diagrams and Service Manuals

13.9. 08WKX: SOLENOID, AIR for Customer Use; Provides (8) Normally Closed Pilot Air Source, Approx. 4 CFM, Includes Switch in Cab; Air Available Only with Key in “Ignition” or “Accessory” Position; Air Will Exhaust with Key in “Off” Position.

Feature Applicability to Vehicle Platforms:

- Heavy Vocational (HV)
- Medium Vocational (MV)
- Heavy Extreme (HX) 2021 and Newer

Extended Description: 08WKX includes eight normally closed pilot air solenoids for customer use. The solenoids are each individually controlled by 2-position latching switches in the instrument panel. The solenoids are provided 12V power through high side relay driver outputs from the body controller and are mounted in one or more four-pack air solenoid module bases mounted under cab driver side frame rail, on the passenger side frame rail mid-frame or on the passenger side frame rail near the end of frame. The locations are dependent on the number of factory features ordered on the vehicle that utilize air solenoids for pilot air.

System Block Diagram:

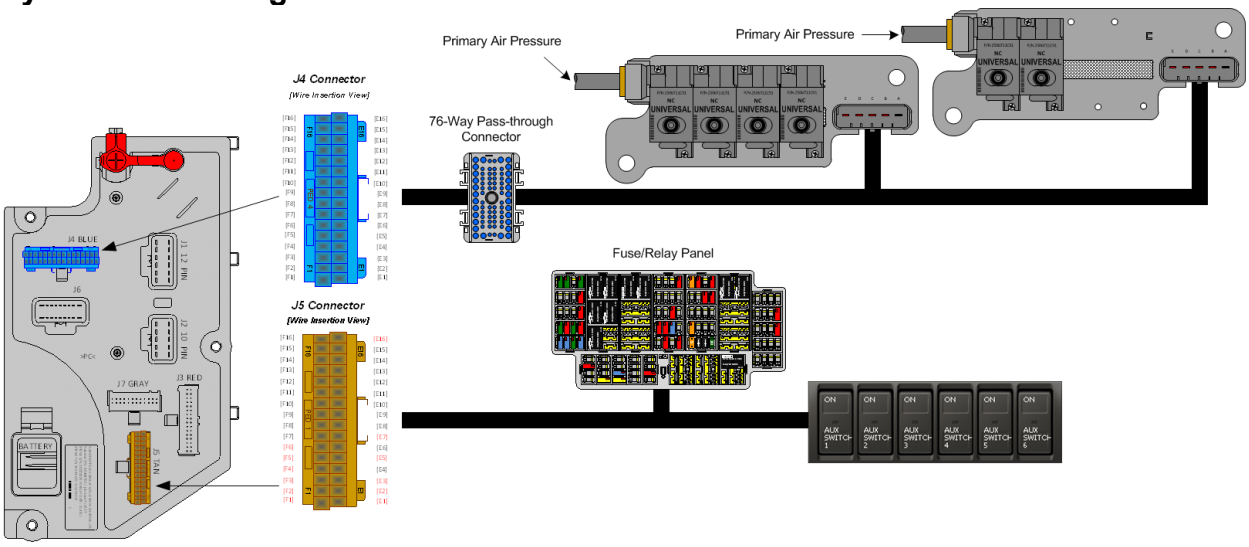

Body Controller Software Feature Codes:
597260 - BCM PROG, AIR SOLENOID MOD #8 CLOSED

Parts Associated with This Feature:

PART NUMBER	DESCRIPTION
MULTIPLEX SWITCH-PACK PARTS	
4057689C4	HOUSING, SWITCH 6-PACK DIN MULTIPLEX
4102431C1	2-POSITION BISTABLE “LATCHING” SWITCH ACTUATOR

AIR SOLENOID 4-PACK PARTS	
2506711C91	KIT, AIR UNIVERSAL SOLENOID (NORMALLY CLOSED)
2505594C1	4-PACK AIR SOLENOID BASE
1661375C2	4-PACK AIR SOLENOID BASE 5-CAVITY CONNECTOR
1661376C1	4-PACK AIR SOLENOID BASE 5-CAVITY CONNECTOR LOCK
2033816C1	4-PACK AIR SOLENOID WIRE TERMINAL 14-GAUGE
2033819C1	4-PACK AIR SOLENOID WIRE TERMINAL 18-GAUGE
0589391C1	4-PACK AIR SOLENOID WIRE TERMINAL SEAL 14-GAUGE
2607909C1	4-PACK AIR SOLENOID WIRE TERMINAL SEAL 18-GAUGE
76-WAY CONNECTOR (THERMAL PROTECTION BARRIER PASS THROUGH)	
3574285C1	76-WAY CONNECTOR WIRE TERMINAL FEMALE 14-GUAGE
3574288C1	76-WAY CONNECTOR WIRE TERMINAL FEMALE 16-GUAGE
2003343C1	76-WAY CONNECTOR WIRE TERMINAL FEMALE 18-GUAGE
3549416C1	76-WAY CONNECTOR WIRE TERMINAL MALE 14-GUAGE
3549417C1	76-WAY CONNECTOR WIRE TERMINAL MALE 16-GUAGE
3549418C1	76-WAY CONNECTOR WIRE TERMINAL MALE 18-GUAGE
32-WAY CONNECTOR BODY CONTROL MODULE J4/J5	
3522073C1	32-WAY BODY CONTROLLER J4/J5 (1601/1602) CONNECTOR WIRE TERMINAL 18/20-GAUGE
3534303C1	32-WAY BODY CONTROLLER J4/J5 (1601/1602) CONNECTOR WIRE TERMINAL 20/22-GAUGE

Parts Associated with Air Solenoid Feature

How to Test This Feature:

This procedure can be used for each auxiliary air solenoid added to the vehicle.

1. Activate the in-cab auxiliary air solenoid switch.
2. Verify that the particular air solenoid either provides air pressure for normally closed or exhausts the air for normally open solenoids.
3. Verify that the proper pin in the air solenoid 4-pack connector has battery voltage.
4. Pin A for all air solenoids should have continuity with the negative battery stud.

Note: This feature uses body controller-based software controls which can be diagnosed with the Navistar® Diamond Logic® Builder (see local dealer if not owned).

References:
Refer to the applicable International® Circuit Diagrams and Service Manuals

14. Battery Disconnect Switch Features

14.1. 08RLZ: BATTERY DISCONNECT SWITCH {Cole-Hersee 75920-06} 300 Amp, Disconnects Cab Power, Does Not Disconnect Charging Circuits, Locks with Padlock, Battery Box Mounted.

Feature Applicability to Vehicle Platforms:

- Heavy Vocational (HV)
- Medium Vocational (MV)
- Heavy Extreme (HX) 2021 and Newer

Extended Description: The battery disconnect switch is used to shut down the entire battery-fed electrical system. When a vehicle is not going to be used for several days or longer, this switch will shut off the system so that the electrical components on the vehicle, if left on, do not drain the batteries of their charge. 08WJW provides a key operated battery disconnect switch mounted on the cab floor driver side. 08WJW disconnects power to the Power Distribution Center (PDC) but does NOT disconnect the charging circuits to the batteries.

Note: The disconnect switch should never be used to shut off the engine as there is a possibility of the alternator generating a high positive voltage spike which may result in electrical damage.

System Block Diagram:

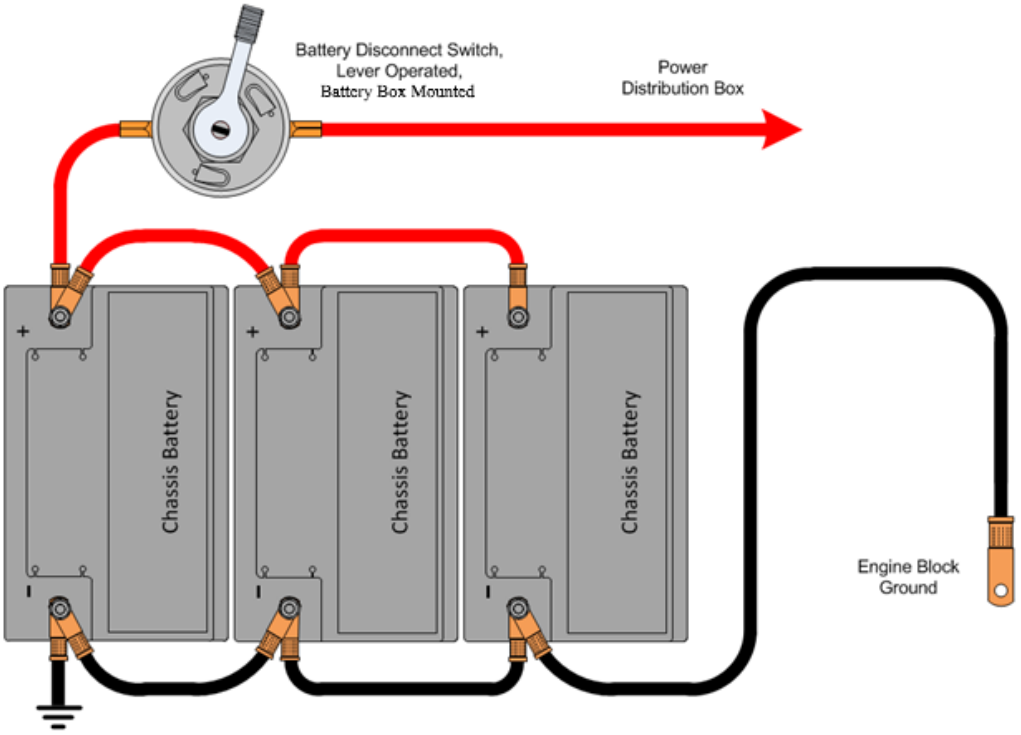

How to Add This Feature:

This disconnect switch cannot be put into the battery Ground (GND) cable as was previously done. The electronic modules will provide a GND path around the master disconnect switch if this is tried. The engine and transmission modules must always be connected to the batteries, even when the master disconnect switch is open. Separate power and GND circuits are provided on each vehicle to the engine and transmission electronics. To install a master, disconnect switch, splice into the positive battery cable, or use OEM cables, going from the batteries to the cranking motor and insert disconnect switch into that circuit, as shown in Figure 1. Ensure that adequate electrical insulation is used between the positive battery cable, the switch mounting, and the surrounding area. Place boots or covers over the disconnect switch studs to protect the batteries and cables from accidental shorting. Do not disturb the direct connections from the battery to the engine or transmission electronics. To reduce corrosion, dielectric grease should cover eyelets and studs.

How to Test This Feature:

1. Close switch.
2. Verify that the vehicle is providing 12-14 Volts to the starter motor.
3. Verify vehicle will start.
4. Turn engine off.
5. Open disconnect switch.
6. Verify vehicle systems do not have any electrical power.

References:
Refer to the applicable International® Circuit Diagrams and Service Manuals.

14.2. 08RMH: BATTERY DISCONNECT SWITCH {Cole-Hersee 75920-06} 300 Amp, Disconnects Charging Circuits, Locks with Padlock, Battery Box Mounted

Feature Applicability to Vehicle Platforms:

- Heavy Vocational (HV)
- Medium Vocational (MV)

Extended Description: The battery disconnect switch is used to shut down the entire battery-fed electrical system. When a vehicle is not going to be used for several days or longer, this switch will shut off the system so that the electrical components on the vehicle, if left on, do not drain the batteries of their charge. 08RMH provides a key operated battery disconnect switch mounted on the battery box. 08RMH disconnects power to the Power Distribution Center (PDC) but does NOT disconnect the charging circuits to the batteries.

Note: The disconnect switch should never be used to shut off the engine as there is a possibility of the alternator generating a high positive voltage spike which may result in electrical damage.

System Block Diagram:

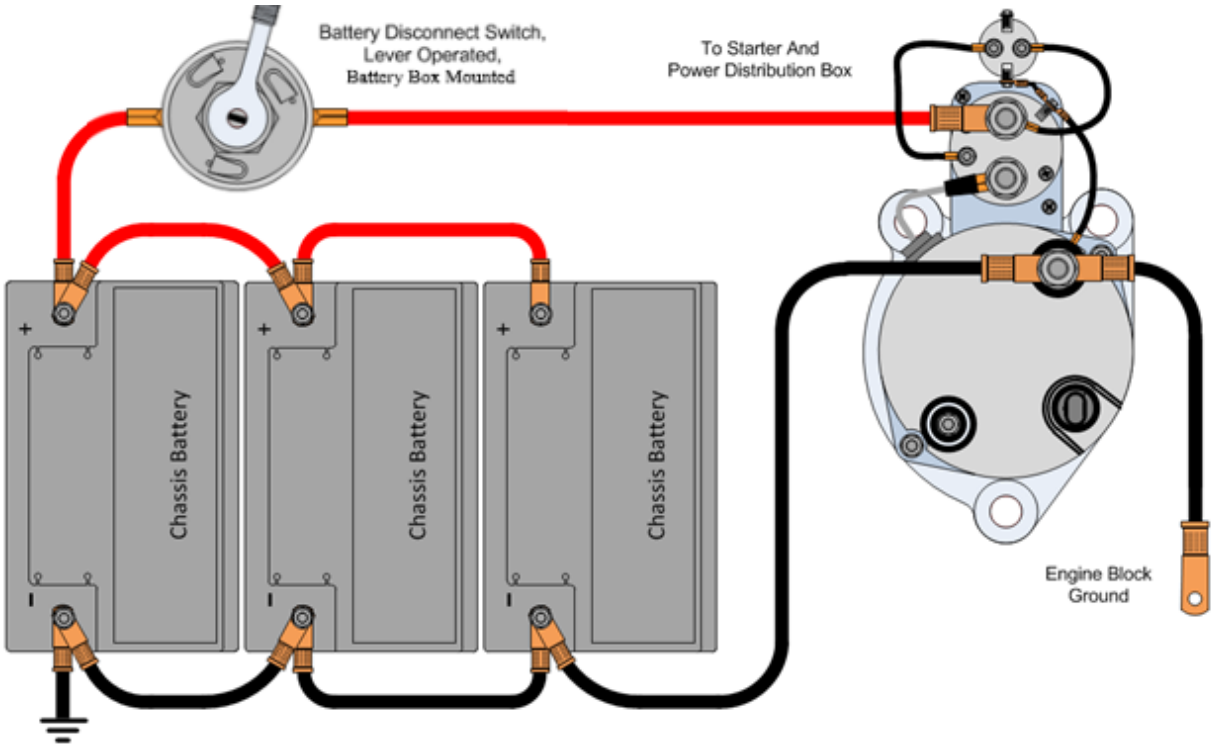

How to Add This Feature:

This disconnect switch cannot be put into the battery Ground (GND) cable as was previously done. The electronic modules will provide a GND path around the master disconnect switch if this is tried. The engine and transmission modules must always be connected to the batteries, even when the master disconnect switch is open. Separate power and GND circuits are provided on each vehicle to the engine and transmission electronics. To install a master disconnect switch, splice into the positive battery cable, or use OEM cables, going from the batteries to the power distribution center and insert disconnect switch into that circuit, as shown in Figure 1. Ensure that adequate electrical insulation is used between the positive battery cable, the switch mounting, and the surrounding area. Place boots or covers over the disconnect switch studs to protect the batteries and cables from accidental shorting. Do not disturb the direct connections from the battery to the engine or transmission electronics. To reduce corrosion, dielectric grease should cover eyelets and studs.

How to Test This Feature:
1. Close switch.
2. Verify that the vehicle is providing 12-14 Volts to the starter motor.
3. Verify vehicle will start.
4. Turn engine off.
5. Open disconnect switch.
6. Verify vehicle systems do not have any electrical power.

References:
Refer to the applicable International® Circuit Diagrams and Service Manuals.

14.3. 08WJV: BATTERY DISCONNECT SWITCH {Joseph Pollak} Locking, Lever Operated, Disconnects Power to PDC, Does Not Disconnect Charging Circuits, Cab Mounted.

Feature Applicability to Vehicle Platforms:
- Line Haul (LT)
- Regional Haul (RH)
- Heavy Vocational (HV)
- Medium Vocational (MV)

Extended Description: The battery disconnect switch is used to shut down the entire battery-fed electrical system. When a vehicle is not going to be used for several days or longer, this switch will shut off the system so that the electrical components on the vehicle, if left on, do not drain the batteries of their charge. 08WJV provides a key operated battery disconnect switch mounted on the battery box. 08WJV disconnects power to the Power Distribution Center (PDC) but does NOT disconnect the charging circuits to the batteries.

Note: The disconnect switch should never be used to shut off the engine as there is a possibility of the alternator generating a high positive voltage spike which may result in electrical damage.

System Block Diagram:

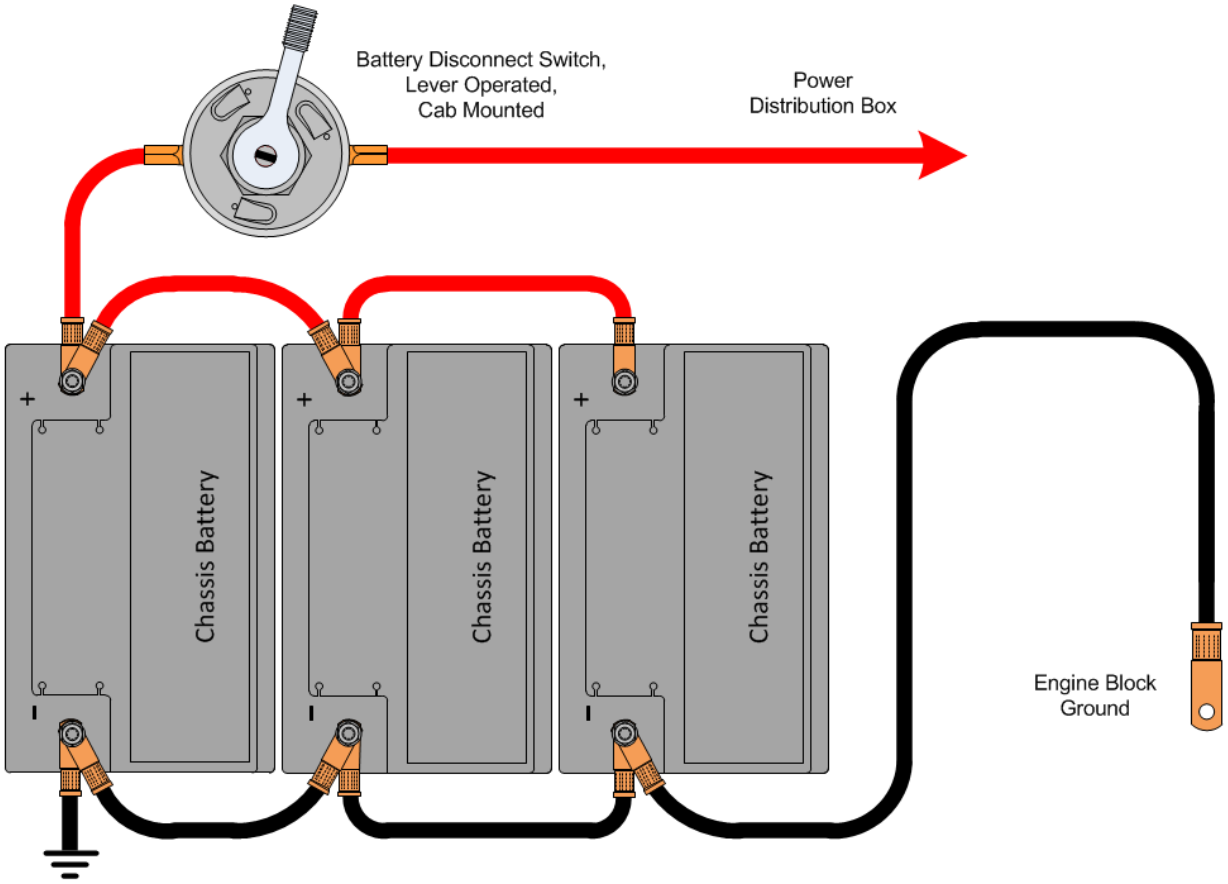

How to Add This Feature:

This disconnect switch cannot be put into the battery Ground (GND) cable as was previously done. The electronic modules will provide a GND path around the master disconnect switch if this is tried. The engine and transmission modules must always be connected to the batteries, even when the master disconnect switch is open. Separate power and GND circuits are provided on each vehicle to the engine and transmission electronics. To install a master disconnect switch, splice into the positive battery cable, or use OEM cables, going from the batteries to the power distribution center and insert disconnect switch into that circuit, as shown in Figure 1. Ensure that adequate electrical insulation is used between the positive battery cable, the switch mounting, and the surrounding area. Place boots or covers over the disconnect switch studs to protect the batteries and cables from accidental shorting. Do not disturb the direct connections from the battery to the engine or transmission electronics. To reduce corrosion, dielectric grease should cover eyelets and studs.

How to Test This Feature:
1. Close switch.
2. Verify that the vehicle is providing 12-14 Volts to the starter motor.
3. Verify vehicle will start.
4. Turn engine off.
5. Open disconnect switch.
6. Verify vehicle systems do not have any electrical power.

References:
Refer to the applicable International® Circuit Diagrams and Service Manuals.

14.4. 08WJW: BATTERY DISCONNECT SWITCH {Joseph Pollak} Key Operated, Disconnects Power to PDC, Does Not Disconnect Charging Circuits, Cab Mounted.

Feature Applicability to Vehicle Platforms:

- Heavy Vocational (HV)

Extended Description: The battery disconnect switch is used to shut down the entire battery-fed electrical system. When a vehicle is not going to be used for several days or longer, this switch will shut off the system so that the electrical components on the vehicle, if left on, do not drain the batteries of their charge. 08WJW provides a key operated battery disconnect switch mounted on the cab floor driver side. 08WJW disconnects power to the Power Distribution Center (PDC) but does NOT disconnect the charging circuits to the batteries.

Note: The disconnect switch should never be used to shut off the engine as there is a possibility of the alternator generating a high positive voltage spike which may result in electrical damage.

System Block Diagram:

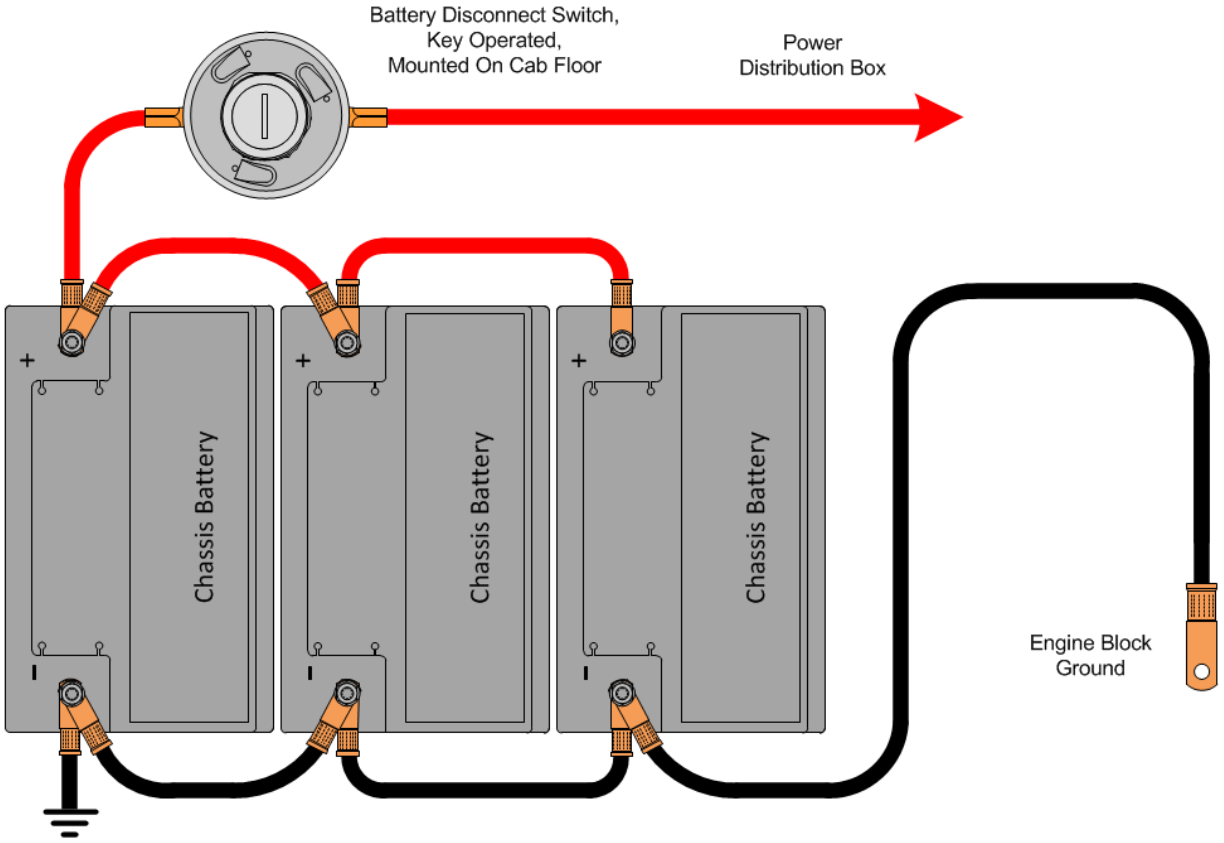

How to Add This Feature:
This disconnect switch cannot be put into the battery Ground (GND) cable as was previously done. The electronic modules will provide a GND path around the master disconnect switch if this is tried. The engine and transmission modules must always be connected to the batteries, even when the master disconnect switch is open. Separate power and GND circuits are provided on each vehicle to the engine and transmission electronics. To install a master disconnect switch, splice into the positive battery cable, or use OEM cables, going from the batteries to the power distribution center and insert disconnect switch into that circuit, as shown in Figure 1. Ensure that adequate electrical insulation is used between the positive battery cable, the switch mounting, and the surrounding area. Place boots or covers over the disconnect switch studs to protect the batteries and cables from accidental shorting. Do not disturb the direct connections from the battery to the engine or transmission electronics. To reduce corrosion, dielectric grease should cover eyelets and studs.

How to Test This Feature:
1. Close switch.
2. Verify that the vehicle is providing 12-14 Volts to the starter motor.
3. Verify vehicle will start.
4. Turn engine off.
5. Open disconnect switch.
6. Verify vehicle systems do not have any electrical power.

References:
Refer to the applicable International® Circuit Diagrams and Service Manuals.

14.5. 08XHD: BATTERY DISCONNECT SWITCH 300 Amp, Disconnects Charging Circuits, Locks with Padlock, Cab Mounted

Feature Applicability to Vehicle Platforms:

- Medium Vocational (MV)

Extended Description: The battery disconnect switch is used to shut down the entire battery-fed electrical system. When a vehicle is not going to be used for several days or longer, this switch will shut off the system so that the electrical components on the vehicle, if left on, do not drain the batteries of their charge. 08XHD provides a lever operated battery disconnect switch mounted on the cab floor driver side. 08XHD disconnects power to the charging circuits to the batteries.

NOTE: The disconnect switch should never be used to shut off the engine as there is a possibility of the alternator generating a high positive voltage spike which may result in electrical damage.

System Block Diagram:

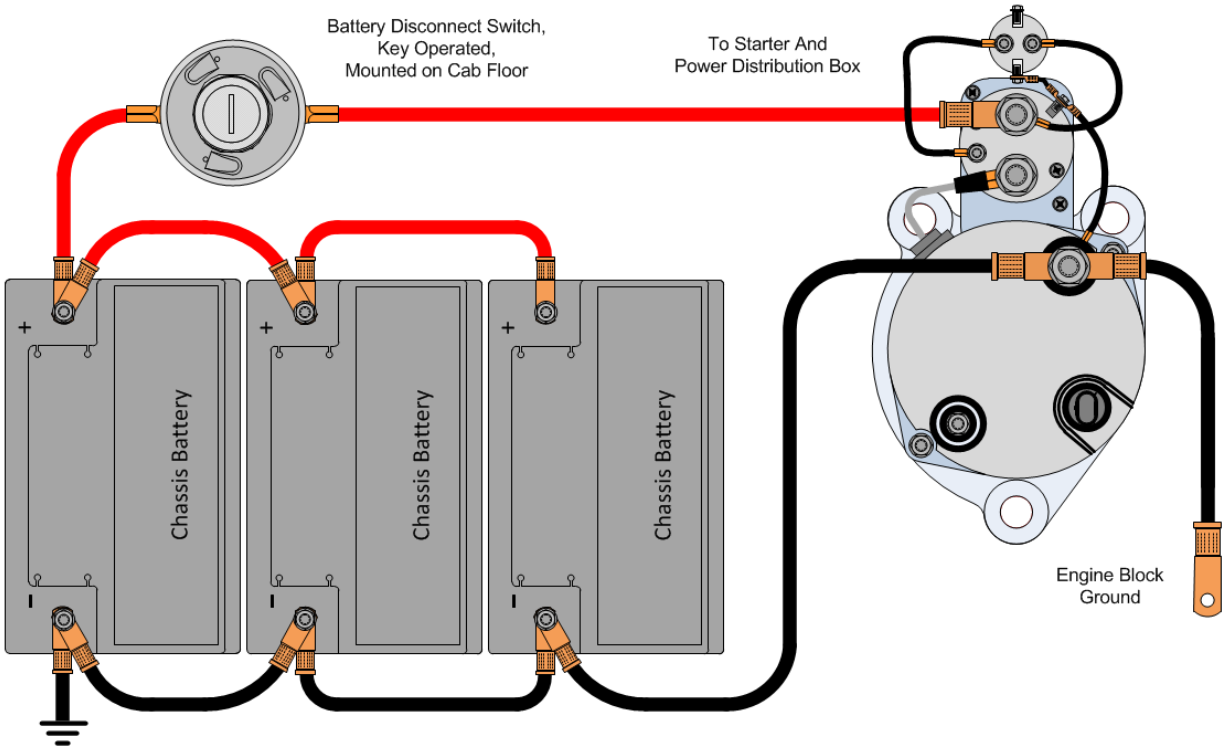

How to Add This Feature:
This disconnect switch cannot be put into the battery Ground (GND) cable as was previously done. The electronic modules will provide a GND path around the master disconnect switch if this is tried. The engine and transmission modules must always be connected to the batteries, even when the master disconnect switch is open. Separate power and GND circuits are provided on each vehicle to the engine and transmission electronics. To install a master disconnect switch, splice into the positive battery cable, or use OEM cables, going from the batteries to the power distribution center and insert disconnect switch into that circuit, as shown in Figure 1. Ensure that adequate electrical insulation is used between the positive battery cable, the switch mounting, and the surrounding area. Place boots or covers over the disconnect switch studs to protect the batteries and cables from accidental shorting. Do not disturb the direct connections from the battery to the engine or transmission electronics. To reduce corrosion, dielectric grease should cover eyelets and studs.

How to Test This Feature:
1. Close switch.
2. Verify that the vehicle is providing 12-14 Volts to the starter motor.
3. Verify vehicle will start.
4. Turn engine off.
5. Open disconnect switch.
6. Verify vehicle systems do not have any electrical power.

References:
Refer to the applicable International® Circuit Diagrams and Service Manuals.

]

14.6. 08XHV: BATTERY DISCONNECT SWITCH for Cab Power Disconnect Switch, Disconnects Power to Power Distribution Center (PDC) and Body Builder Through Solenoid, Does Not Disconnect Charging Circuits, Locks with Padlock, Cab Mounted

Feature Applicability to Vehicle Platforms:
- Medium Vocational (MV)

Extended Description: The battery disconnect switch is used to shut down the entire battery-fed electrical system. When a vehicle is not going to be used for several days or longer, this switch will shut off the system so that the electrical components on the vehicle, if left on, do not drain the batteries of their charge. 08XHV provides a lever operated battery disconnect switch mounted on the cab floor driver side. 08XHV disconnects power to the Power Distribution Center (PDC) but does NOT disconnect the charging circuits to the batteries.

NOTE: The disconnect switch should never be used to shut off the engine as there is a possibility of the alternator generating a high positive voltage spike which may result in electrical damage.

System Block Diagram:

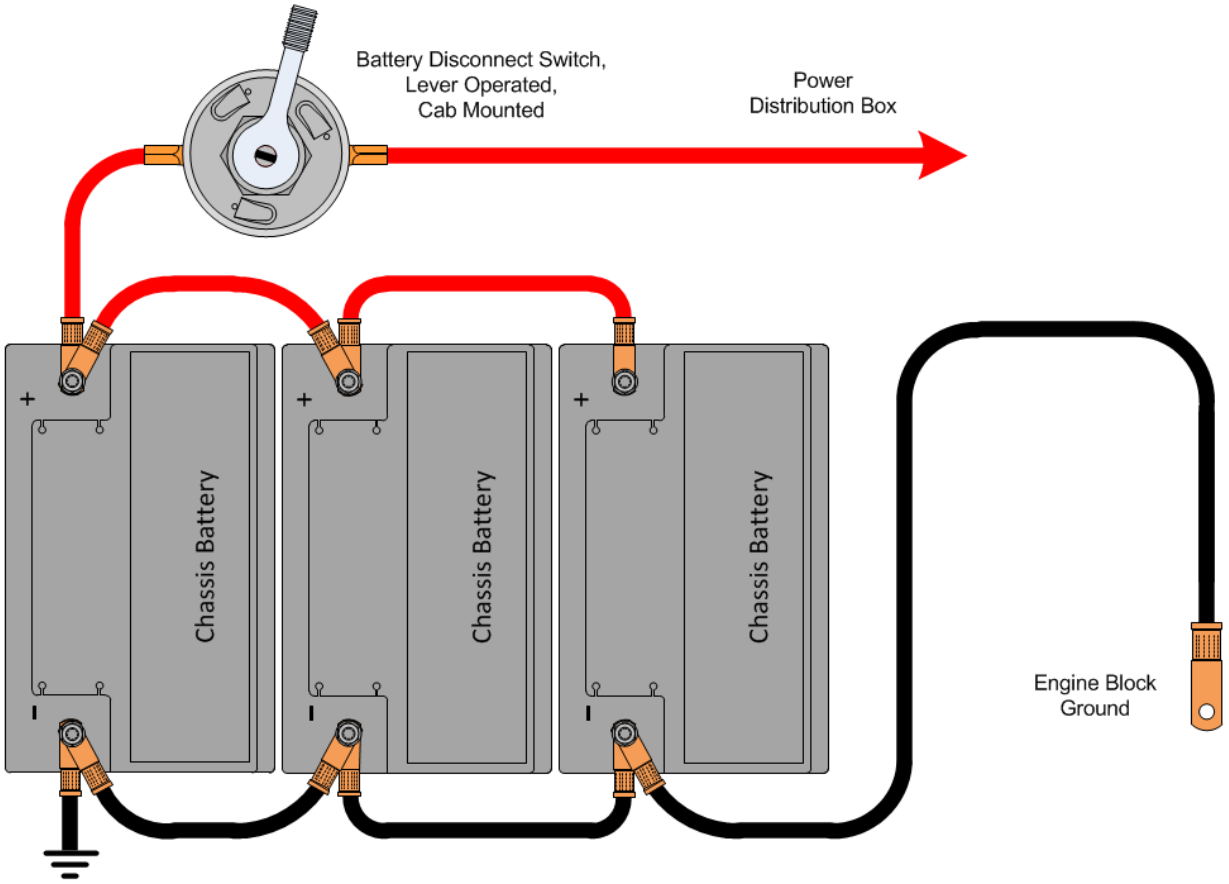

How to Add This Feature:

This disconnect switch cannot be put into the battery Ground (GND) cable as was previously done. The electronic modules will provide a GND path around the master disconnect switch if this is tried. The engine and transmission modules must always be connected to the batteries, even when the master disconnect switch is open. Separate power and GND circuits are provided on each vehicle to the engine and transmission electronics. To install a master disconnect switch, splice into the positive battery cable, or use OEM cables, going from the batteries to the power distribution center and insert disconnect switch into that circuit, as shown in Figure 1. Ensure that adequate electrical insulation is used between the positive battery cable, the switch mounting, and the surrounding area. Place boots or covers over the disconnect switch studs to protect the batteries and cables from accidental shorting. Do not disturb the direct connections from the battery to the engine or transmission electronics. To reduce corrosion, dielectric grease should cover eyelets and studs.

How to Test This Feature:
1. Close switch.
2. Verify that the vehicle is providing 12-14 Volts to the starter motor.
3. Verify vehicle will start.
4. Turn engine off.
5. Open disconnect switch.
6. Verify vehicle systems do not have any electrical power.

References:
Refer to the applicable International® Circuit Diagrams and Service Manuals.

14.7. 08XNB: BATTERY DISCONNECT SWITCH 300 Amp, Disconnects Power to Power Distribution Center (PDC), Does Not Disconnect Charging Circuits, Locks with Padlock, Cab Mounted.

Feature Applicability to Vehicle Platforms:
- Heavy Extreme (HX) 2021 and Newer

Extended Description: The battery disconnect switch is used to shut down the entire battery-fed electrical system. When a vehicle is not going to be used for several days or longer, this switch will shut off the system so that the electrical components on the vehicle, if left on, do not drain the batteries of their charge. 08XNB provides a lockable battery disconnect switch mounted on the cab floor driver side. 08XNB disconnects power to the Power Distribution Center (PDC) but does NOT disconnect the charging circuits to the batteries.

NOTE: The disconnect switch should never be used to shut off the engine as there is a possibility of the alternator generating a high positive voltage spike which may result in electrical damage.

System Block Diagram:

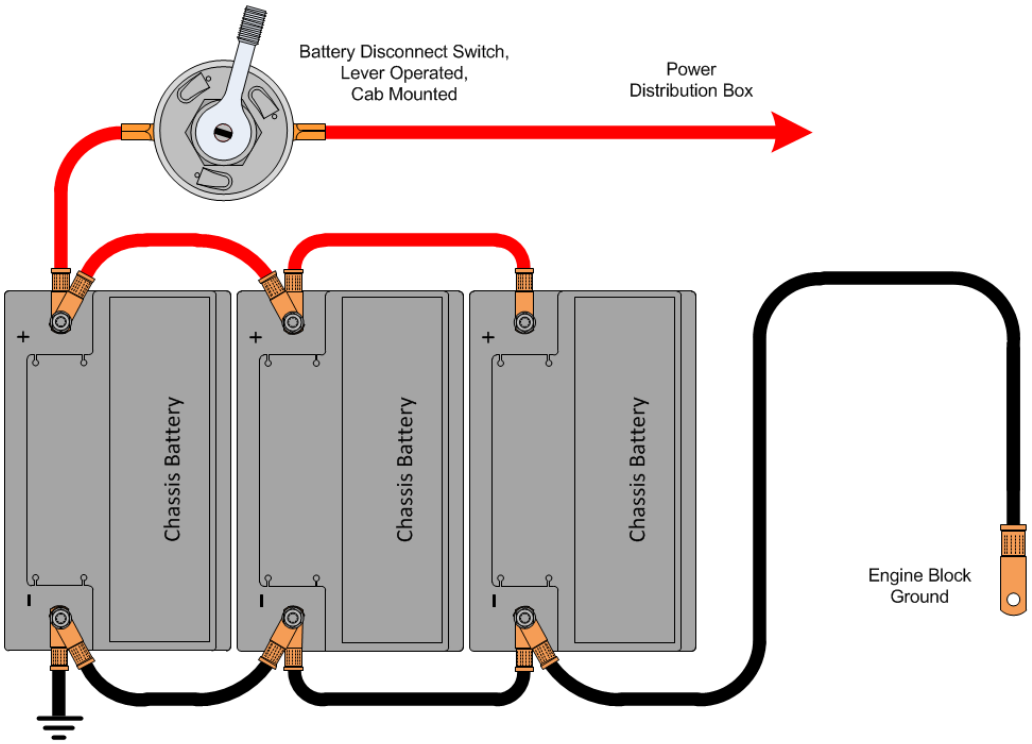

How to Add This Feature:

This disconnect switch cannot be put into the battery Ground (GND) cable as was previously done. The electronic modules will provide a GND path around the master disconnect switch if this is tried. The engine and transmission modules must always be connected to the batteries, even when the master disconnect switch is open. Separate power and GND circuits are provided on each vehicle to the engine and transmission electronics. To install a master disconnect switch, splice into the positive battery cable, or use OEM cables, going from the batteries to the power distribution center and insert disconnect switch into that circuit, as shown in Figure 1. Ensure that adequate electrical insulation is used between the positive battery cable, the switch mounting, and the surrounding area. Place boots or covers over the disconnect switch studs to protect the batteries and cables from accidental shorting. Do not disturb the direct connections from the battery to the engine or transmission electronics. To reduce corrosion, dielectric grease should cover eyelets and studs.

How to Test This Feature:
1. Close switch.
2. Verify that the vehicle is providing 12-14 Volts to the starter motor.
3. Verify vehicle will start.
4. Turn engine off.
5. Open disconnect switch.
6. Verify vehicle systems do not have any electrical power.

References:
Refer to the applicable International® Circuit Diagrams and Service Manuals

14.8. 08WZP: BATTERY WARNING Green Indicator Mounted on Left Side of Instrument Panel above left side switch panel.

Feature Applicability to Vehicle Platforms:
- Heavy Vocational (HV)
- Medium Vocational (MV)

Extended Description: May be used with factory code 08WAD, 08WCS, 08WHX, 08WHY, 08WJT, 08WJU, 08WJV or 08WJW (battery disconnect switch for cab power) or with a customer supplied disconnect. The indicator will illuminate any time the battery disconnect switch is turned on, battery connected, regardless of key position.

System Block Diagram:

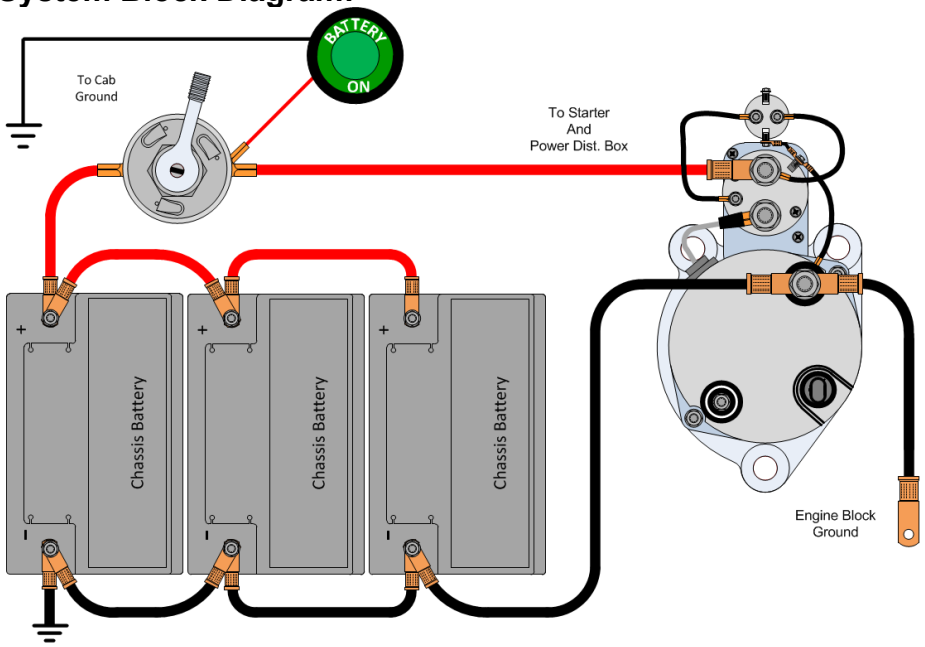

Parts Associated with This Feature:

PART NUMBER	DESCRIPTION
4106252C1	LIGHT, ASSY, BATTERY DISCONNECT - LED W/GROMMET

Indicator Light Part Number

How to Add This Feature:

To install an indicator light, add a circuit form the battery disconnect switch to the indicator and then to a ground, as shown in the System Block Diagram. Ensure that adequate electrical insulation is used between the positive battery cable, the switch mounting, and the surrounding area. Place boots or covers over the disconnect switch studs to protect the batteries and cables from accidental shorting. Do not disturb the direct connections from the battery to the engine or transmission electronics. To reduce corrosion, dielectric grease should cover eyelets and studs.

How to Test This Feature:

The indicator will illuminate when the battery disconnect switch is turned on regardless of key position.

References:

Refer to the applicable International® Circuit Diagrams and Service Manuals.

15. Body Builder Integration Harnesses

15.1. 08WZG: JUNCTION BLOCK Stud, 100-Amp Battery Feed, protected by a Fusible Link, Stud to be used for Body Builder Feeds Inside Cab.

Feature Applicability to Vehicle Platforms:

- Heavy Vocational (HV)
- Heavy Extreme (HX) 2021 and Newer

Extended Description: This feature is a battery feed point provided inside the cab. The connection will provide up to 100-amps for body builder use. The circuit feeds off the mega fuse on the left side of the dash panel and is protected by a fusible link connection. A 3/8” stud is provided on the left side of the instrument panel behind the gauge cluster.

System Block Diagram:

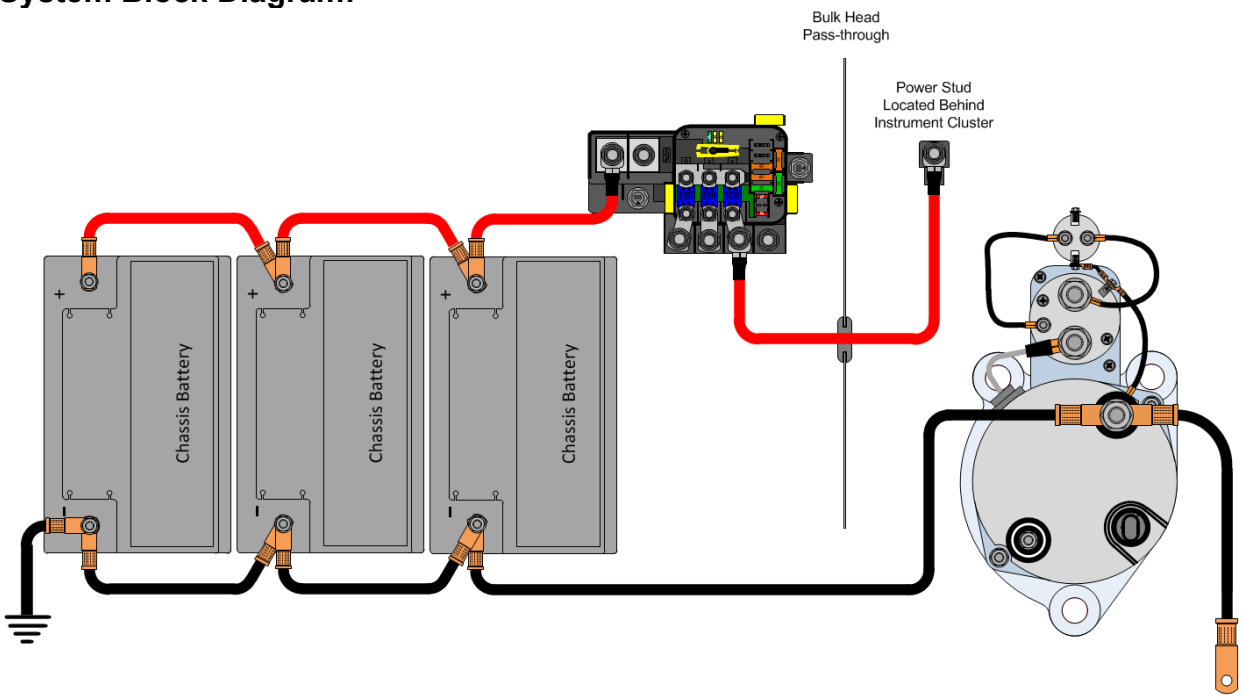

How to Test This Feature:

1. Verify that the 3/8” stud is supplying battery voltage.

References:

Refer to the applicable circuit diagram information.

15.2. RP1226 Features.

Extended Description:

The 14-pin RP1226 connector is the recommended and approved method for connecting body equipment and telematics devices to our trucks.
While the 9-pin diagnostic connector remains necessary for service and diagnostics, using it for other purposes (like add-on devices) can cause communication issues and unpredictable electrical behavior.
As vehicles have become more advanced and data traffic has increased, this practice can now lead to signal loss, erratic operation, or intermittent faults that are difficult to diagnose.
Using the RP1226 connector provides several advantages including:
• Keeps third-party devices requiring a CAN connection on the proper data link.
• Provides battery, ignition, ground, and communication lines to the 250k Baud line in one clean connection.
• Complies with SAE J1939 standards for reliability.
• RP1226 is a recommended practice from the 2015 TMC (ATA's Technology and Maintenance Council).
• Eliminates random and hard-to-trace electrical faults

NOTE: Connector locations vary from feature to feature and may be different between models.

System Block Diagram:

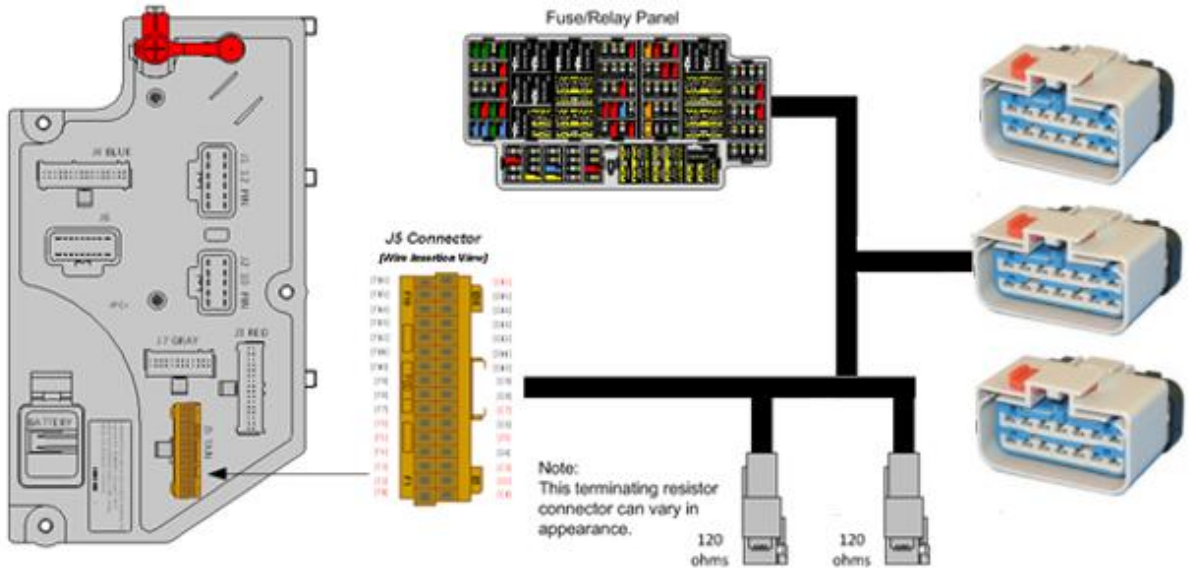

Parts Associated with This Feature:

PART NUMBERS	DESCRIPTION
08XMB CONNECTOR (OEM CONNECTOR BODY)	
2524355C91	14-WAY CONNECTOR BODY
2523579C91	WIRE TERMINAL 18-20 GAUGE
3989901C1	WIRE TERMINAL 14-GAUGE
3753255C1	WIRE TERMINAL 12-GAUGE
08XMB CONNECTOR (MALE CONNECTOR BODY)	
3618231C1	14-WAY CONNECTOR BODY
3626441C1	WIRE TERMINAL 20-18 GAUGE
3627568C1	WIRE TERMINAL 16-14 GAUGE

Parts Associated with 08XMB Feature.

Connector Pin Outs:

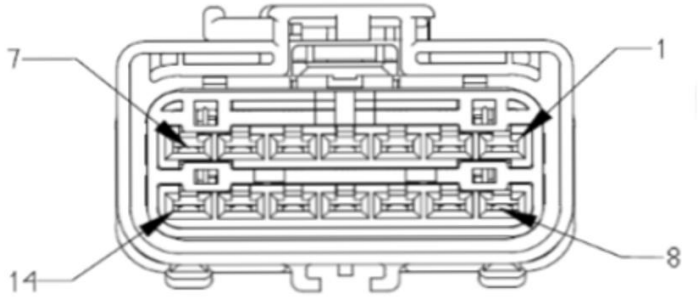

Pin	Circuit
1	Switched Battery
2	J1939 Body Builder 250K (+)
7	Ignition
8	Ground
9	J1939 Body Builder 250K (-)
14	Battery

Component Locations:

Component locations for features 08XMB, 08XMZ and 08XNA differ between the LT and RH models and the other models.
On the LT and RH, the connectors are located under the dog house cover.
On the other models, the connectors are located behind the center of the dash panel.



LT and RH RP1226 Connector Locations

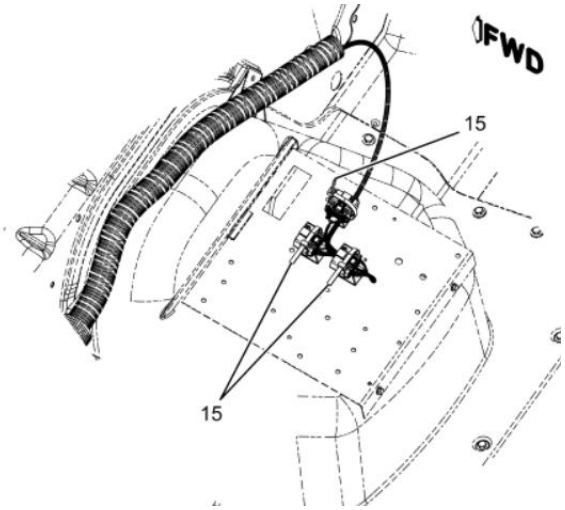

08XMB, 08XMZ and 08XNA Connector Locations Under Dog House Cover

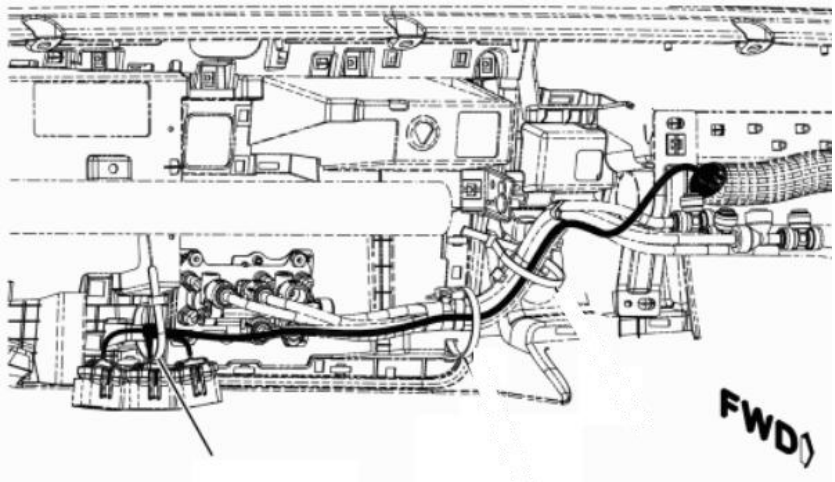

08XMB, 08XMZ and 08XNA Connector Locations Behind Dash Panel

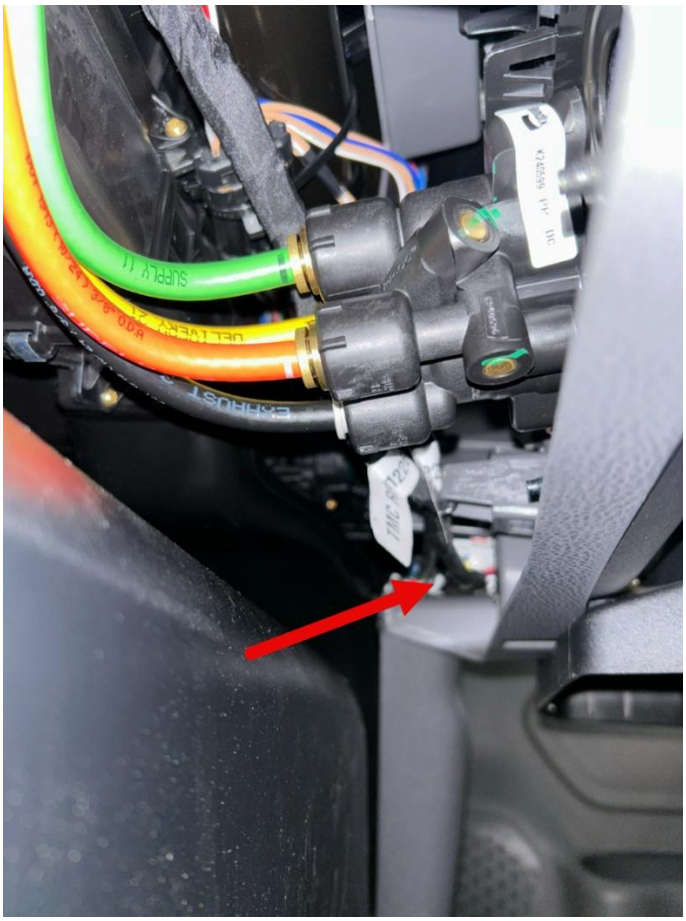

08XMB, 08XMZ and 08XNA Connector Locations Behind Dash Panel

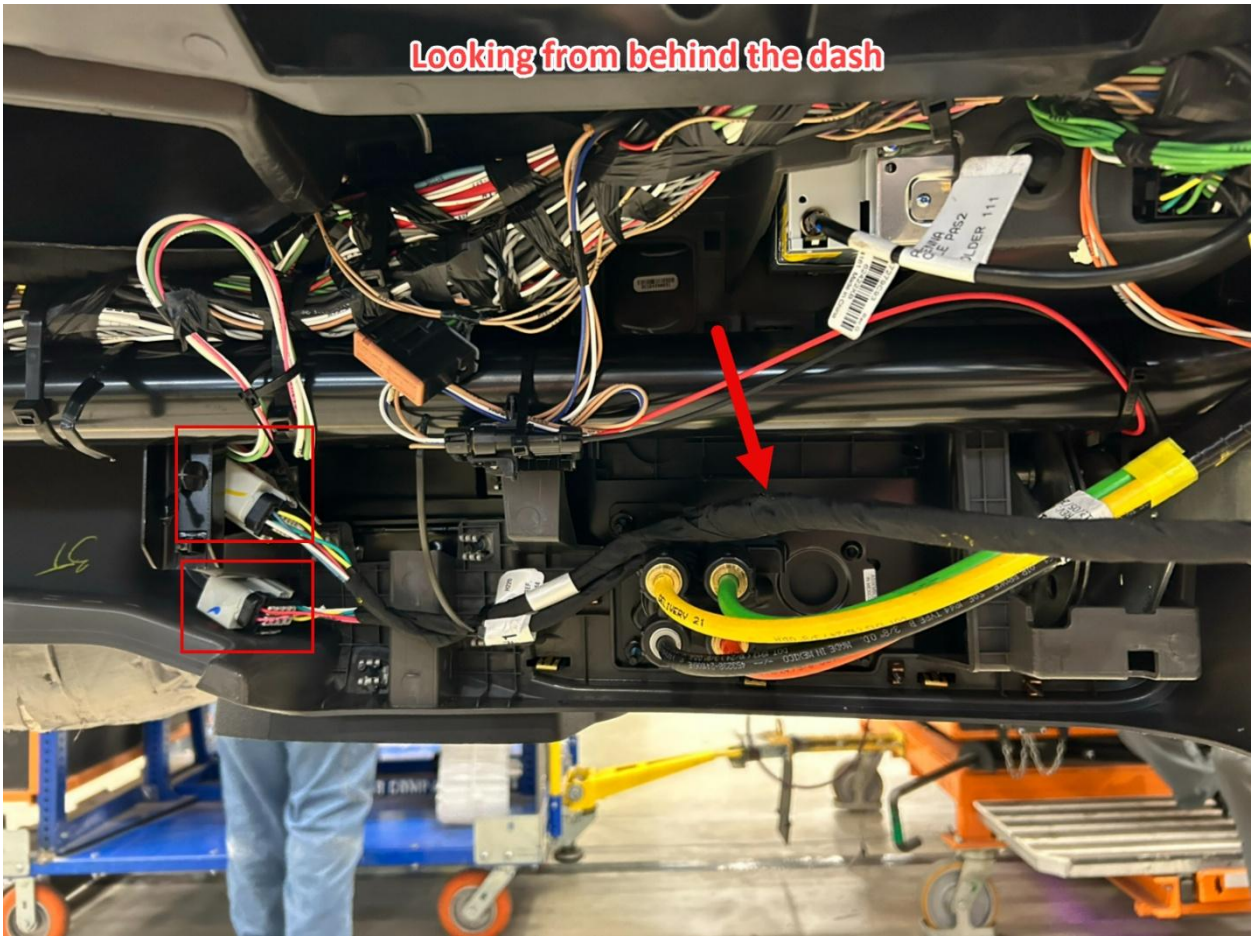

08XMB, 08XMZ and 08XNA Connector Locations Behind Dash Panel

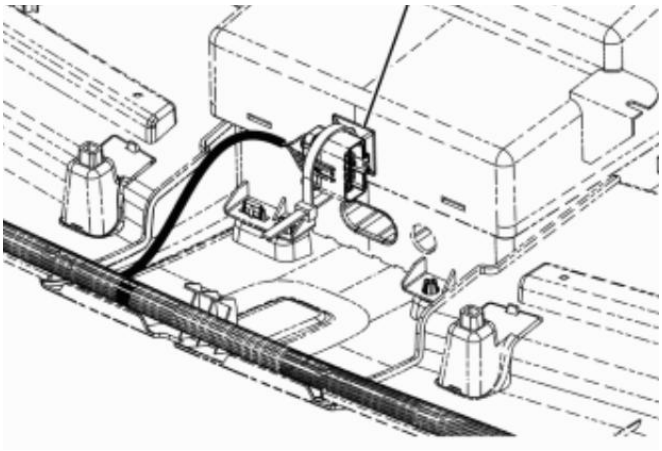

08XMW Connector Location in Header Panel

References:

Refer to the applicable International® Circuit Diagrams and Service Manuals.

15.2.1. 08XMB: WIRING (1)TMC RP1226 BEHIND CTR CONSOLE CONNECTOR, DASH, CENTER PANEL Cab Wiring for TMC RP1226 Vehicle Accessory Connector; Includes 14-pin Connector with Switched Power, Battery Power, Ignition Power, Ground & Body 250K Datalink, Connector Located Behind Instrument Panel Center Console

Feature Applicability to Vehicle Platforms:

- Medium Vocational (MV)
- Heavy Vocational (HV)
- Regional Haul (RH)
- Line Haul (LT)
- Heavy Extreme (HX) 2021 and Newer

15.2.2. 08XMZ: CONNECTOR, DASH, CENTER PANEL Cab Wiring for (2) TMC RP1226 Vehicle Accessory Connectors; Includes (2) 14-pin Connectors with Switched Power, Battery Power, Ignition Power, Ground & Body 250K Datalink, Connector Located Behind Instrument Panel Center Console

Feature Applicability to Vehicle Platforms:

- Medium Vocational (MV)
- Heavy Vocational (HV)
- Regional Haul (RH)
- Line Haul (LT)
- Heavy Extreme (HX) 2021 and Newer

15.2.3. 08XNA: CENTER PANEL Cab Wiring for (3) TMC RP1226 Vehicle Accessory Connectors; Includes (3) 14-pin Connectors with Switched Power, Battery Power, Ignition Power, Ground & Body 250K Datalink, Connector Located Behind Instrument Panel Center Console.

Feature Applicability to Vehicle Platforms:

- Medium Vocational (MV)
- Heavy Vocational (HV)
- Regional Haul (RH)
- Line Haul (LT)
- Heavy Extreme (HX) 2021 and Newer

15.2.4. 08XND: CONNECTOR, DASH, AUX PANEL CAB WIRING FOR TMC RP1226 VEHICLE ACCESSORY CONNECTOR; INCLUDES 14-PIN CONNECTOR WITH SWITCHED POWER, BATTERY POWER, IGNITION POWER, GROUND & BODY 250K DATALINK, CONNECTOR LOCATED BEHIND OPTIONAL GAUGE LOCATION ON IP WING PANEL

Feature Applicability to Vehicle Platforms:

- Regional Haul (RH)
- Line Haul (LT)
- Heavy Extreme (HX) 2021 and Newer

15.2.5. 08XMW: CONNECTOR, OVERHEAD (1) TMC RP1226 CONNECTOR, OVERHEAD Cab Wiring for TMC RP1226 Vehicle Accessory Connector; Includes 14-pin Connector with Switched Power, Battery Power, Ignition Power, Ground & Body 250K Datalink, Connector Located at Overhead Console, for Customer Supplied Cameras.

Feature Applicability to Vehicle Platforms:

- Medium Vocational (MV)
- Heavy Vocational (HV)
- Regional Haul (RH)
- Line Haul (LT)
- Heavy Extreme (HX) 2021 and Newer

Connector Location:

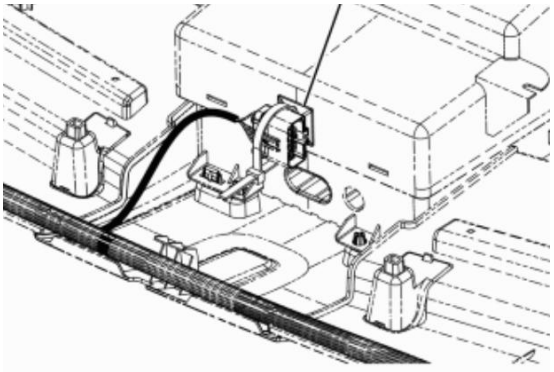

08XMW Connector Location in Header Panel

15.3. 08XNL: CONNECTORS, CHASIS/BODY INTERFACE Cab Wiring for TMC RP170A 8-pin Conn w/Switched, Battery, Ignition Power & Ground Located on Cab Floor; 31-pin Conn w/Engine, Transmission & Chassis, Data Networks Located on Cab Floor Between Driver & Pass Seats; 14-pin Conn w/Chassis & Body Lightning Signals Located Left Frame Back of Cab

Feature Applicability to Vehicle Platforms:

- Heavy Extreme (HX)
- Heavy Vocational (HV)

Extended Description: Feature 08XNL includes connectors providing convenience for connecting to the ECM, TCM, vehicle power and body builder lighting,

System Block Diagram:

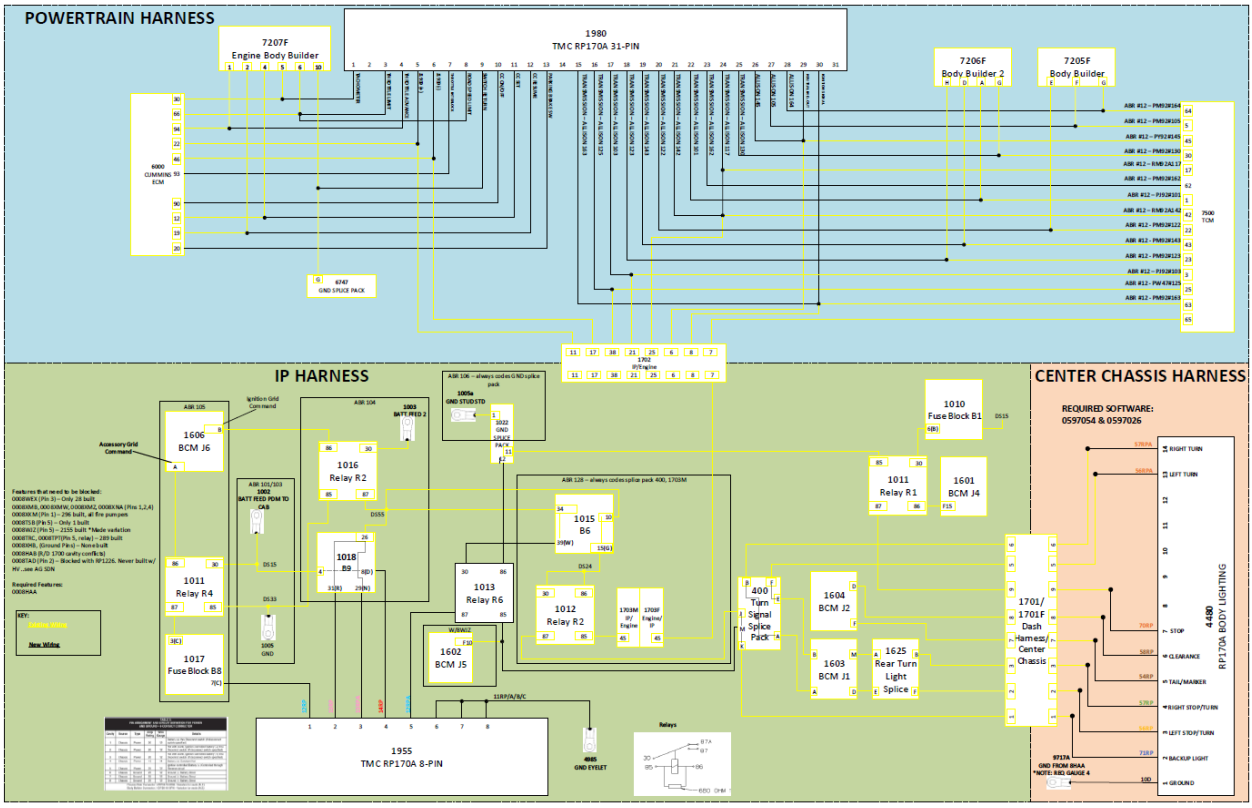

Parts Associated with This Feature:

PART NUMBER	DESCRIPTION
8-WAY VEHICLE INTERFACE CONNECTOR	
4252152C1	8-WAY CONNECTOR BODY
3841699C1	WIRE TERMINAL SIZE 12 (GOLD PLATED)
8-WAY MATING CONNECTOR	
4252153C1	8-WAY ECM CONNECTOR BODY
3841696C1	WIRE TERMINAL SIZE 12 (GOLD PLATED)
31-WAY VEHICLE INTERFACE CONNECTOR	
3688257C1	31-WAY ECM CONNECTOR BODY
1651969C1	WIRE TERMINAL SIZE 16
31-WAY MATING CONNECTOR	
3688254C1	31-WAY ECM CONNECTOR BODY
1651968C1	WIRE TERMINAL SIZE 16
14-WAY VEHICLE INTERFACE CONNECTOR	
4227140C1	14-WAY CONNECTOR BODY
4251093C1	WIRE TERMINAL SIZE 4
500398C1	WIRE TERMINAL SIZE 12
1659751C1	WIRE TERMINAL 14-GAUGE
1651969C1	WIRE TERMINAL 16 AWG
14-WAY MATING CONNECTOR	
3618231C1	14-WAY CONNECTOR
4234136C1	WIRE TERMINAL SIZE 4
500397C1	WIRE TERMINAL SIZE 12
1659750C1	WIRE TERMINAL 14-GAUGE
1651968C1	WIRE TERMINAL 16 AWG

Parts Associated with 08XNL Feature

Connector Locations:

8-pin 4405 routed under scuff plate and around back of driver's seat





PIN ASSIGNMENT AND CIRCUITS FOR POWER AND GRUND – 8 PIN CONNECTOR 4405					
Cavity	Source	Type	Amp Rating	Wire Gauge	Details
A	Chassis	Power	20	12	TMC Acessory Power
B	Chassis	Power	20	12	Hot with crank, Ignition controlled battery (+)thru Disconnect switch (If disconnect switch specified)
C	Chassis	Power	20	12	Hot with crank, Ignition controlled battery (+)thru Disconnect switch (If disconnect switch specified)
D	Chassis	Power	16	14	Battery (+) Constant Hot
E	Chassis	Power	20	12	Reverse High Side
F		Ground	20	12	Ground (-) Battery Direct
7		Ground	20	12	Ground (-) Battery Direct
8		Ground	20	12	Ground (-) Battery Direct

31-pin, 4406, routed under cab from powertrain to inside cab though hole in cab floor (same as RPM module wiring)

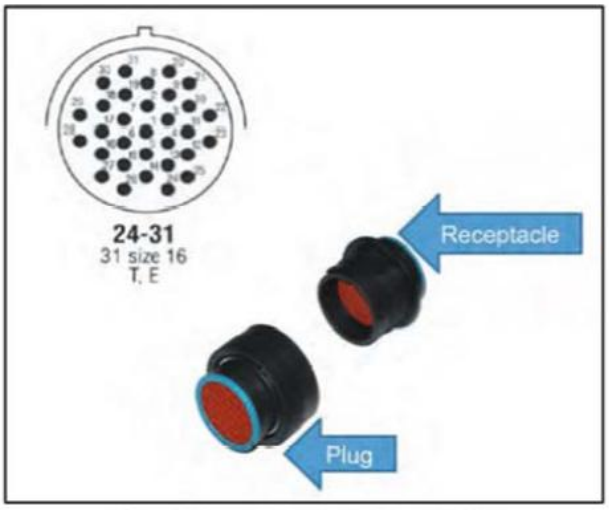



PIN ASSIGNMENT AND CIRCUITS FOR ENGINE, TRANSMISSION, CHASSIS AND DATA LINK – 31 PIN CONNECTOR 4406					
Cavity	Source	Type	Amp Rating	Wire Gauge	Details
1	Engine	Signal	8	18	Tachometer signal from the ECM
2	Chassis	Signal	8	18	
3	Engine	Signal	8	18	Maximum Engine Speed Signal (CumminsOnly)
4	Engine	Signal	8	18	Remote AESC ON/OFF Signal
5	Engine	Signal	8	18	Powertrain Datalink (500KBPS) J1939 (+)
6	Engine	Signal	8	18	Powertrain Datalink (500KBPS) J1939 (-)
7	Engine	Signal	8	18	Accelerator Pedal Position Signal Return
8	Engine	Signal	8	18	Maximum Engine Speed SP Signal (CumminsOnly)
9	Engine	ZVR	8	18	Zero Volt Reference
10	Engine	Signal	8	18	Cruise Control EnableSwitch Signal
11	Engine	Signal	20	12	Cruise Set Switch Signal
12	Engine	Signal	20	12	Cruise Resume Switch Signal
13	Engine	Signal	20	12	Park Brake Switch Signal
14	Chassis	Power	16	14	
15	TCM	Power	8	18	TCM Allison Ignition Power
16	TCM	Ground	8	18	Road Speed Signal Control
17	TCM	Signal	8	18	Allison Body Builder Wire 103
18	TCM	Signal	8	18	Allison Body Builder Wire 123
19	TCM	Signal	8	18	Allison Body Builder Wire 143
20	TCM	Signal	8	18	Allison Body Builder Wire 122
21	TCM	Signal	8	18	Allison Body Builder Wire 142
22	TCM	Signal	8	18	Allison Body Builder Wire 101
23	TCM	Signal	8	18	Allison Body Builder Wire 162
24	TCM	Signal	8	18	Allison Body Builder Wire 117
25	TCM	Signal	8	18	Allison Body Builder Wire 130

26	TCM	Signal	8	18	Allison Body Builder Wire 145
27	TCM	Signal	8	18	Allison Body Builder Wire 105
28	TCM	Signal	8	18	Allison Body Builder Wire 164
29	TCM	Signal	8	18	Allison Body Builder Wire 145
30	TCM	Signal	8	18	TCM Allison SP Ignition Power

14·Pin·4404·Located·Left·Frame·Back·of·Cab·



PIN ASSIGNMENT AND CIRCUITS FOR ENGINE, TRANSMISSION, CHASSIS AND DATA LINK – 14 PIN CONNECTOR 4404					
Pin	Source	Type	Amp Rating	Wire Gauge	Details
1	Chassis	Ground	160	4	Ground
2	Chassis	Signal	16	12	Body Builder Switched Reverse High Side
3	Chassis	Signal	12	16	Body Builder Left Rear Turn/Stop Light High Side
4	Chassis	Signal	12	16	Body Builder Right Rear Turn/Stop Light High Side
5	Chassis	Signal	16	14	Body Builder Marker Light High Side
6	Chassis	Signal	19	18	Body Builder Tail Light High Side
7	Chassis	Signal	16	14	Body Builder Stop Light High Side
13	Chassis	Signal	12	16	Body Builder Left Turn High Side
14	Chassis	Power	12	16	Body Builder Right Turn High Side

References:

Refer to the applicable International® Circuit Diagrams and Service Manuals.

15.4. 08XPC: ACCESSORY WIRING, SPECIAL for Body Builder Feeds & Road Speed Wire Coiled Behind Driver Seat for Customer Use, Includes 15 & 5 Amp Ignition, (2) 20 Amp Battery, (2) Ground and Road Speed

Feature Applicability to Vehicle Platforms:

- Medium Vocational (MV)
- Heavy Vocational (HV)
- Heavy Extreme (HX)

Extended Description: Feature 08XPC includes connectors providing convenience for connecting to the Ignition, battery, and road speed circuits.

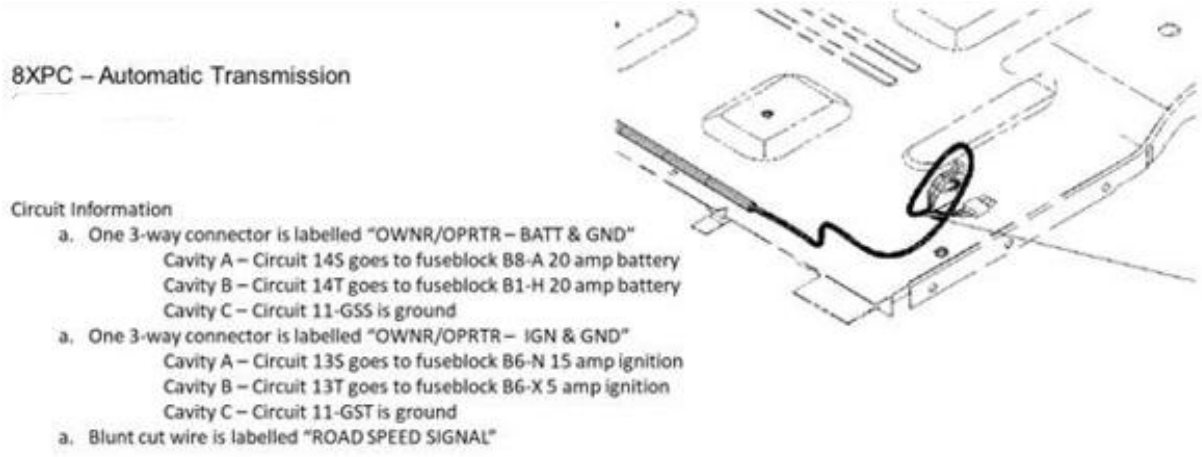

System Block Diagram – With S13 Engine:

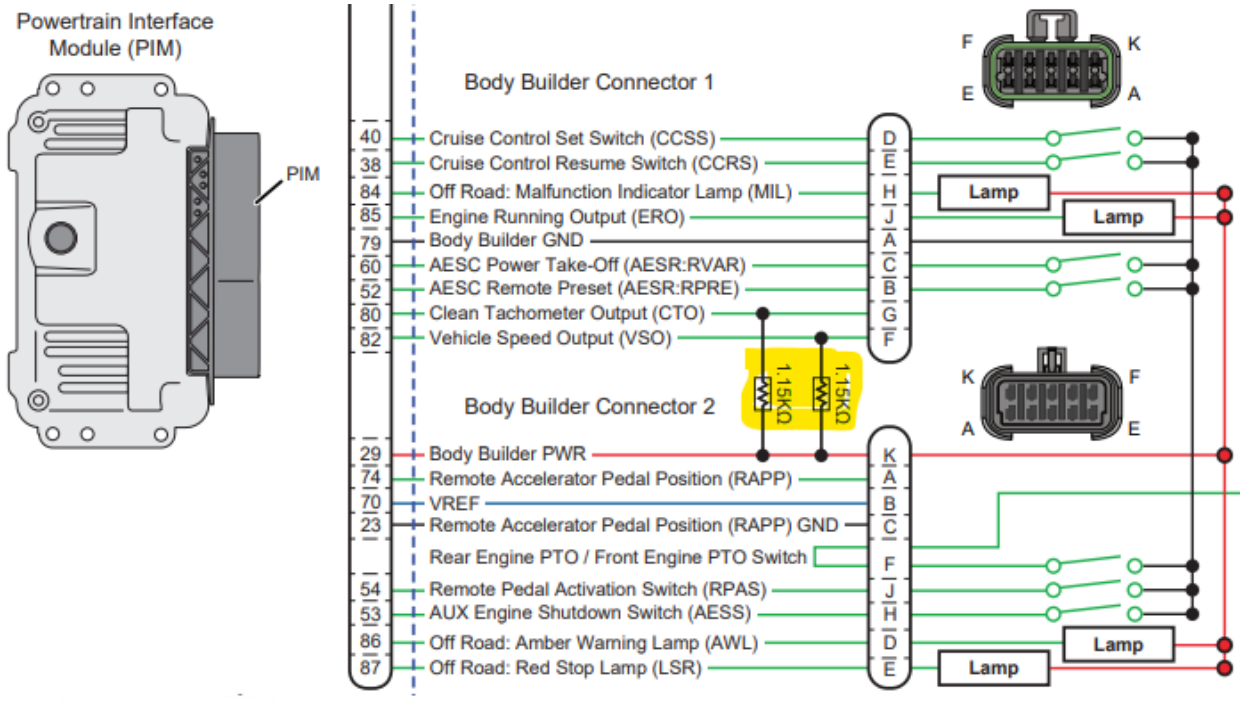

Note: With the S13 engine, the Speedometer circuits include a pull up resistor in the circuits when 08XPC is ordered. If these outputs are added to a truck that was not built with a sales feature that includes the resistor and connections are made directly to the PIM connector on pin 80 or pin 82, a 1.15 K Ohms 1 Watt pull up resistor will need to be added between the pin and a 12 volt source.

Parts Associated with This Feature:

N/A

Connector Locations:

Connectors and blunt cut wire are behind the driver's seat.

References:
Refer to the applicable International® Circuit Diagrams and Service Manuals.

15.5. 08XPD: ACCESSORY WIRING, SPECIAL for Body Builder Feeds & Road Speed Wire Coiled Behind Driver Seat for Customer Use, Includes 15 & 5 Amp Ignition, (2) 20 Amp Battery, (2) Ground and Road Speed Unconditioned Manual Transmission Output Shaft Speed, Additional Body Builder Signal

Feature Applicability to Vehicle Platforms:

- Heavy Vocational (HV)

Extended Description: Feature 08XPD includes connectors providing convenience for connecting to the Ignition, battery, and road speed circuits.

System Block Diagram:

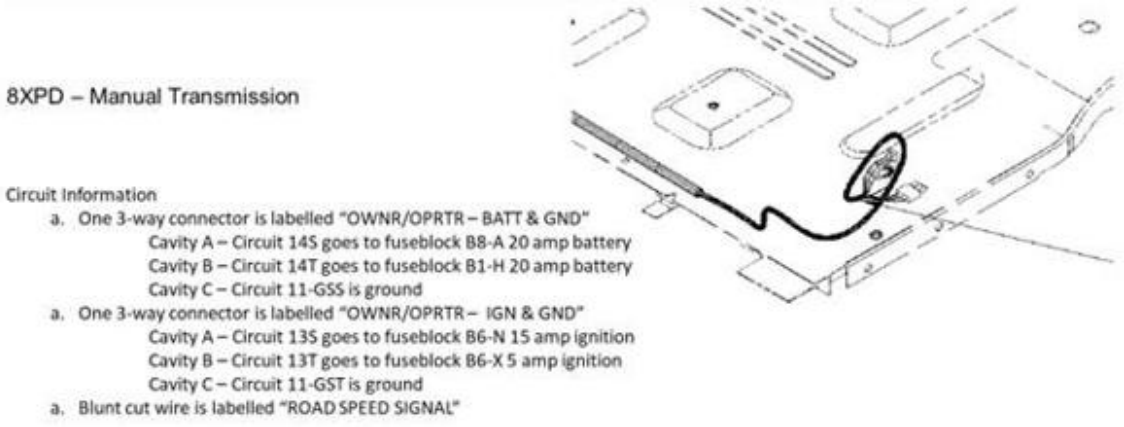

Parts Associated with This Feature:

N/A

Connector Locations:

Connectors and blunt cut wire are behind the driver's seat.

References:

Refer to the applicable International® Circuit Diagrams and Service Manuals.

15.6. 60ABM: BDY INTG, RPM I/O HARNESS, Includes a Harness with 6 Input Blunt Cut wires and 6 Output Blunt Cut Wires, for use with one RPM.

Feature Applicability to Vehicle Platforms:

- Heavy Vocational (HV)
- Medium Vocational (MV)
- Heavy Extreme (HX) 2021 and Newer

Extended Description: Feature 60ABM provides the I/O RPM connectors, terminals, and blunt cut wires for TEMs and Body Builders to connect body wiring to the RPM. This significantly reduces labor installation and material content previously required with just the connectors. The included wires are approximately 3-feet long and ease connecting the RPM to body wiring.

System Block Diagram:



Parts Associated with This Feature:

PART NUMBER	DESCRIPTION
RPM Connector Harness	
3677578C91	Harness, Chassis Wiring, Remote Power Module #1 Body Integration

Parts Associated with I/O Expansion Harness Feature

References:

Refer to the applicable International® Circuit Diagrams and Service Manuals.

15.7. 60ABN: BDY INTG, RPM I/O HARNESS, Includes 2-Harnesses with 6-Input Blunt Cut wires and 6 Output Blunt Cut Wires, for use with two RPMs.

Feature Applicability to Vehicle Platforms:

- Heavy Vocational (HV)
- Medium Vocational (MV)
- Heavy Extreme (HX) 2021 and Newer

Extended Description: Feature 60ABN provides the I/O RPM connectors, terminals, and blunt cut wires for TEMs and Body Builders to connect body wiring to two RPMs. This significantly reduces labor installation and material content previously required with just the connectors. The included wires are approximately 3-feet long and ease connecting the RPMs to body wiring.

System Block Diagram:

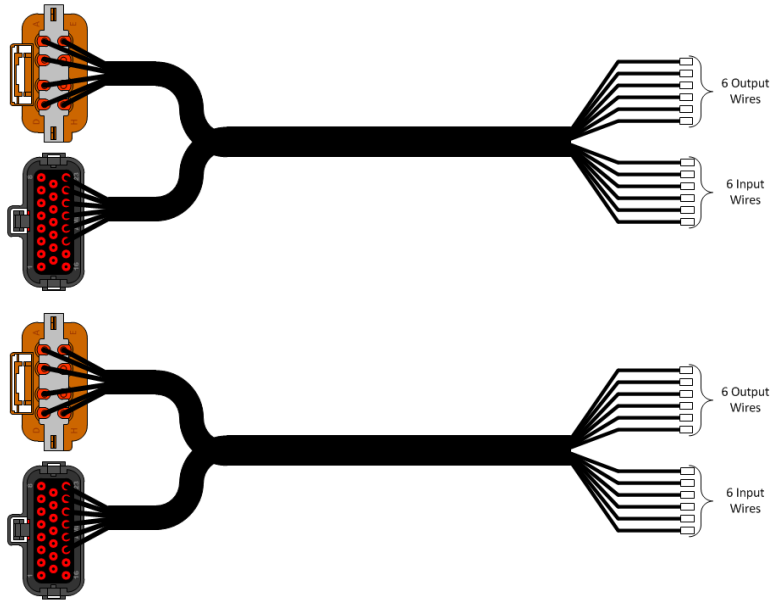

Parts Associated with This Feature:

PART NUMBER	DESCRIPTION
RPM Connector Harness	
3677578C91	Harness, Chassis Wiring, Remote Power Module #1 Body Integration
3678735C91	Harness, Chassis Wiring, Remote Power Module #2 Body Integration

Parts Associated with I/O Expansion Harness Feature

References:
Refer to the applicable International® Circuit Diagrams and Service Manuals.

15.8. 60ACW: BODY INTG, I/O EXPANSION HARNESS (for Diamond Logic® Builder only) includes a harness with five blunt-cut wires routed on lower left of IP. Two GND active inputs and two (0.5 AMP) relay driver outputs (GND active) are provided.

Feature Applicability to Vehicle Platforms:

- Heavy Vocational (HV)
- Medium Vocational (MV)
- Heavy Extreme (HX) 2021 and Newer

Extended Description: This feature is an input/output expansion feature for Diamond Logic® Builder to be utilized by Body Builders. This expansion feature provides the following: (2) ground digital inputs, (2) 0.5-Amp ground relay driver outputs, (1) Zero Volt Reference (ZVR) on the Body Controller (BCM) as well as an expansion overlay harness that is part of the IP harness. The expansion overlay harness grants access to these inputs, outputs, and ZVR by providing blunt-cut wires that are strapped to the main IP harness trunk near the J1939 diagnostic connector on the interior of the cab. The overlay harness was designed to be long enough to allow the wires to be inserted into the 72-way pass thru connector if desired.

Additionally, there are (2) 0.5-Amp ground relay driver outputs not included in the overlay harness which are available only through the advanced logic capabilities of Diamond Logic® Builder. When this order code is added to the vehicle, the BCM pins will not show up on the connector view of DLB until they are written to with Advanced Logic.

System Block Diagram:

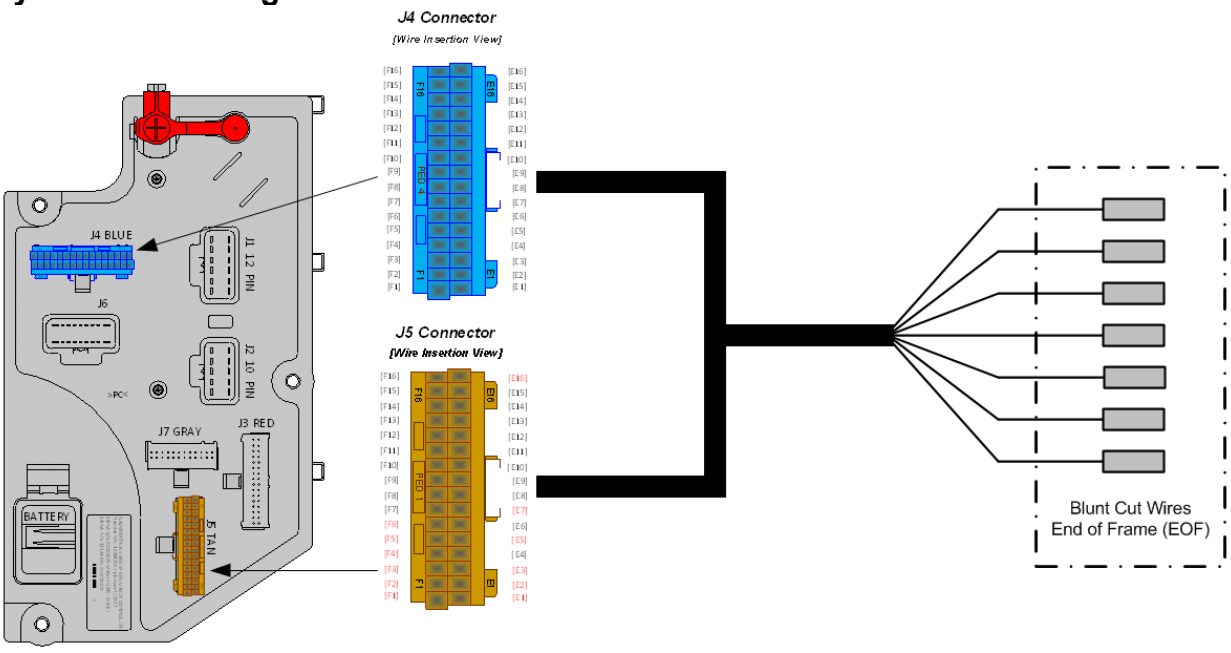

Body Controller Software Feature Codes:
597320 - BCM PROG, DLB I/O EXPANSION

Parts Associated with This Feature:

PART NUMBER	DESCRIPTION
32-WAY CONNECTOR BODY CONTROL MODULE J4/J5 CONNECTOR PARTS	
3522073C1	WIRE TERMINAL 18/20-GAUGE
3534303C1	WIRE TERMINAL 20/22-GAUGE

Parts Associated with I/O Expansion Harness Feature

How to Test This Feature:
Use Diamond Logic® Builder software to program and test output and input drivers.

References:
Refer to the applicable International® Circuit Diagrams and Service Manuals.

System Block Diagram:

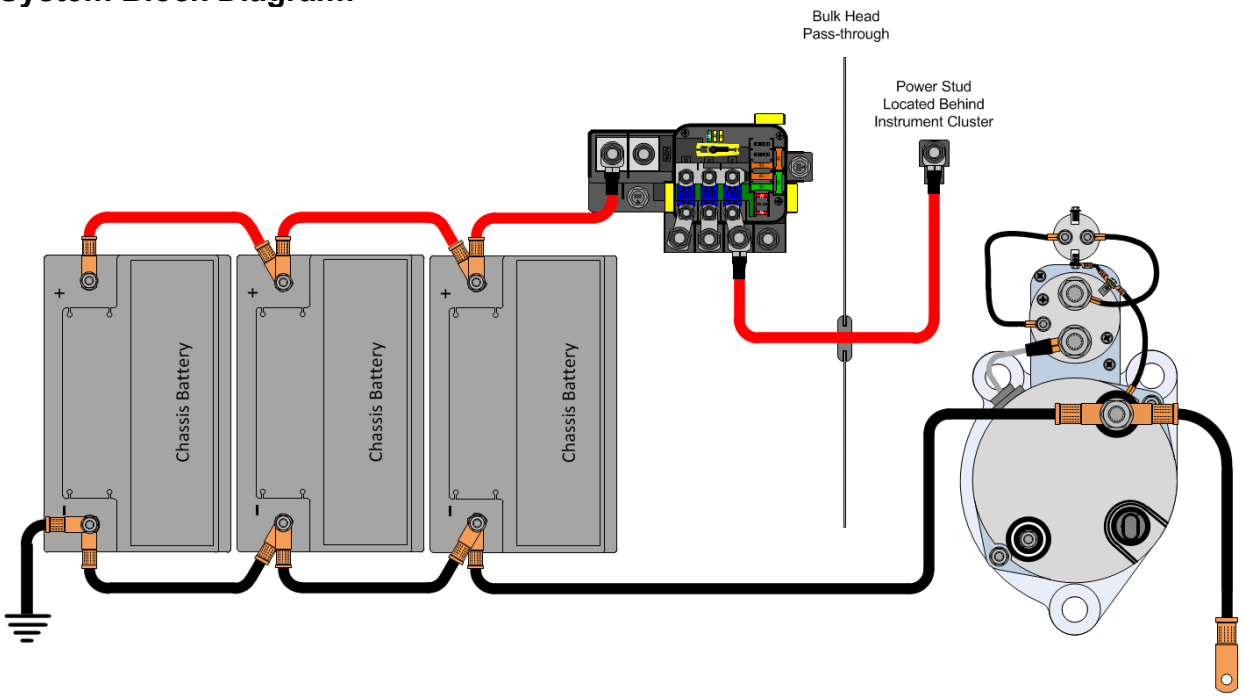

How to Test This Feature:
1. Verify that the 3/8” stud is supplying battery voltage.

References:
Refer to the applicable International® Circuit Diagrams and Service Manuals

16. Body Builder Wiring, for Stop/Turn/Taillights/ Though Power:

16.1. 08HAA: BODY BUILDER WIRING To EOF, With Stop, Tail, Turn, and Marker Lights Circuits, and Ground (GND), Less Trailer Socket.

Feature Applicability to Vehicle Platforms:

- Heavy Vocational (HV)
- Medium Vocational (MV)
- Heavy Extreme (HX) 2021 and Newer

Extended Description: This feature is for vehicles that have heavy-duty lighting requirements. Right and Left turn signals can support up to seven turn lamps per side. Code 08HAA is designed for separate stop and turn lamps only. The 6-wire breakout is located at the EOF and there is no connector. The wires are blunt cut with heat shrink covering.

System Block Diagram:

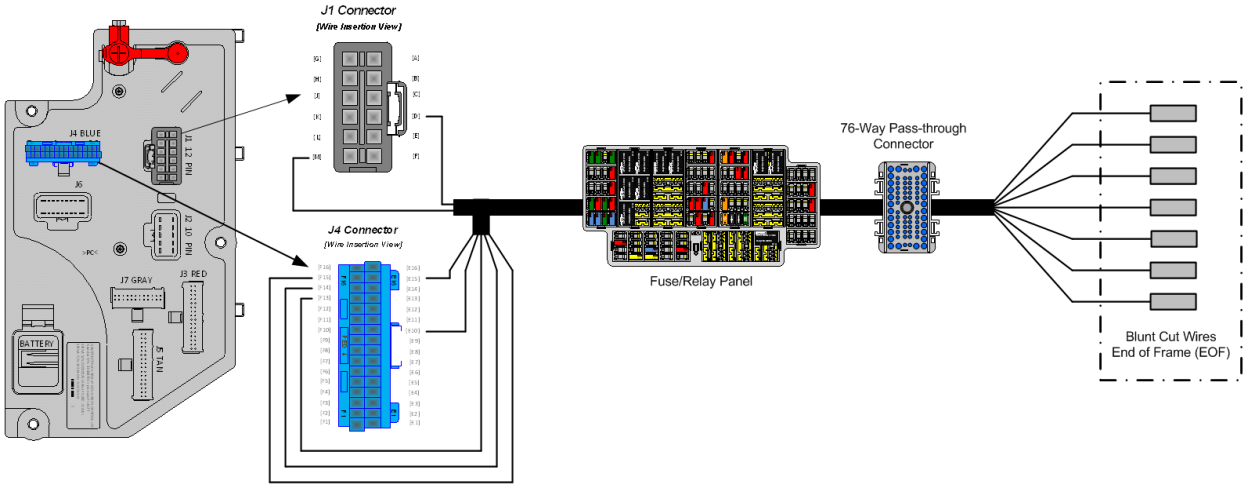

Body Controller Software Feature Codes:

- 597054 – BCM PROG, TRAILER LIGHTING

Body Controller Software Feature Code Parameters:

Parameter	ID	Description	Default	Units	Min	Max	Step
Trailer_Left_Turn_Lamp_OC_Current	3175	Trailer Left Lamp Open Circuit Detection Level value range	0	A	0	20	0.1
Trailer_Left_Turn_Lamp_Low_Current	3177	Trailer Left Lamp Low Current Detection Level value range	0	A	0	20	0.1
Trailer_Left_Turn_Lamp_High_Current	3178	Trailer Left Lamp High Current Detection Level value range	15	A	0	20	0.1
Trailer_Right_Turn_Lamp_High_Current	3179	Trailer Right Lamp High Current Detection Level value range	15	A	0	20	0.1
Trailer_Right_Turn_Lamp_Low_Current	3180	Trailer Left Lamp Low Current Detection Level value range	0	A	0	20	0.1
Trailer_Right_Turn_Lamp_OC_Current	3181	Trailer Left Lamp Open Circuit Detection Level value range	0	A	0	20	0.1
Trailer_Marker_Lamp_High_Current	3182	Trailer Marker Lamp High Current Detection Level value range	20	A	0	20	0.1
Trailer_Marker_Lamp_Low_Current	3183	Trailer Marker Lamp Low Current Detection Level value range	0	A	0	20	0.1
Trailer_Marker_Lamp_OC_Current	3184	Trailer Marker Lamp Open Circuit Detection Level value range	0	A	0	20	0.1
Trailer_Tail_Lamp_High_Current	3185	Trailer Tail Lamp High Current Detection Level value range	20	A	0	20	0.1
Trailer_Tail_Lamp_Low_Current	3186	Trailer Tail Lamp Low Current Detection Level value range	0	A	0	20	0.1
Trailer_Tail_Lamp_OC_Current	3187	Trailer Tail Lamp Open Circuit Detection Level value range	0	A	0	20	0.1

Parameter Definitions:

- **Trailer_Left_Turn_Lamp_OC_Current** – This parameter sets the minimum fuse level for the open circuit of the Trailer Left Turn Lamp. If the current draw is below this value, a fault will be set.
- **Trailer_Left_Turn_Lamp_Low_Current** – This parameter sets the minimum fuse level for normal operation of the Trailer Left Turn Lamp. If the current draw exceeds this value, the circuit will open.
- **Trailer_Left_Turn_Lamp_High_Current** – This parameter sets the maximum fuse level for normal operation of the Trailer Left Turn Lamp. If the current draw exceeds this value, the circuit will open.
- **Trailer_Right_Turn_Lamp_High_Current** – This parameter sets the maximum fuse level for normal operation of the Trailer Right Turn Lamp. If the current draw exceeds this value, the circuit will open.
- **Trailer_Right_Turn_Lamp_Low_Current** – This parameter sets the minimum fuse level for normal operation of the Trailer Right Turn Lamp. If the current draw exceeds this value, the circuit will open.
- **Trailer_Right_Turn_Lamp_OC_Current** – This parameter sets the minimum fuse level for the open circuit of the Trailer Right Turn Lamp. If the current draw is below this value, a fault will be set.
- **Trailer_Marker_Lamp_High_Current** – This parameter sets the maximum fuse level for normal operation of the Trailer Marker Lamp. If the current draw exceeds this value, the circuit will open.
- **Trailer_Marker_Lamp_Low_Current** – This parameter sets the minimum fuse level for normal operation of the Trailer Marker Lamp. If the current draw exceeds this value, the circuit will open.
- **Trailer_Marker_Lamp_OC_Current** – This parameter sets the minimum fuse level for the open circuit of the Trailer Marker Lamp. If the current draw is below this value, a fault will be set.
- **Trailer_Tail_Lamp_High_Current** – This parameter sets the maximum fuse level for normal operation of the Trailer Tail Lamp. If the current draw exceeds this value, the circuit will open.
- **Trailer_Tail_Lamp_Low_Current** – This parameter sets the minimum fuse level for normal operation of the Trailer Tail Lamp. If the current draw exceeds this value, the circuit will open.
- **Trailer_Tail_Lamp_OC_Current** – This parameter sets the minimum fuse level for the open circuit of the Trailer Tail Lamp. If the current draw is below this value, a fault will be set.

How to Add This Feature:
Feature 08HAA is not available with code 08HAG and 08HAH Electric Trailer Brake or codes 08TME and 08TMG Trailer Connection Socket and 08THH Aux Trailer Socket with Center Pin Circuit. If the vehicle has any of these codes, 08HAA cannot be installed in the vehicle.

Note: This feature is not easy to install, and every effort should be made to order the vehicle with the desired code. Refer to the 6-way socket at EOF for information covering circuit connections and use of the circuit diagram manual to aid in assembly.

How to Test This Feature:
1. Turn on vehicle headlights.
2. Verify that the taillight circuit has battery voltage levels present.
3. Verify that the marker light circuit has battery voltage levels present.
4. Turn off vehicle headlights.
5. Turn on left turn signal in vehicle.
6. Verify that left turn circuit is cycling between battery voltage and GND.
7. Turn off vehicle left turn signal.
8. Turn on right turn signal in vehicle.
9. Verify that right turn circuit is cycling between battery voltage and GND.
10. Turn off vehicle left turn signal.
11. Put the vehicle in reverse.
12. Press the vehicle brake pedal.
13. Verify that the stop circuit (# R70) has battery voltage levels present.
14. Release brake pedal.

Note: This feature uses body controller-based software controls which can be diagnosed with the Navistar® Diamond Logic® Builder software (see local dealer if not owned).

References:
Refer to the applicable International® Circuit Diagrams and Service Manuals

16.2. 08HAB: BODY BUILDER WIRING, BOC AT LEFT OF FRAME, includes 7-way sealed connector for tail/amber/backup/accessory power/GND and sealed connectors for combination stop/turn and a 3-way for separate stop/turn lights.

Feature Applicability to Vehicle Platforms:

- Heavy Vocational (HV)
- Line Haul Transport (LT)
- Medium Vocational (MV)

Extended Description: This feature includes one 7-way and one 3-way sealed connector at the back of cab. The 7-way connector includes tail light, clearance, backup, stop/turn, accessory and ground circuits for the body builder to connect to in place of wiring into the chassis equipped end of frame light circuits. The 3-way connector includes circuits for separate stop and turn lights if needed.

System Block Diagram:

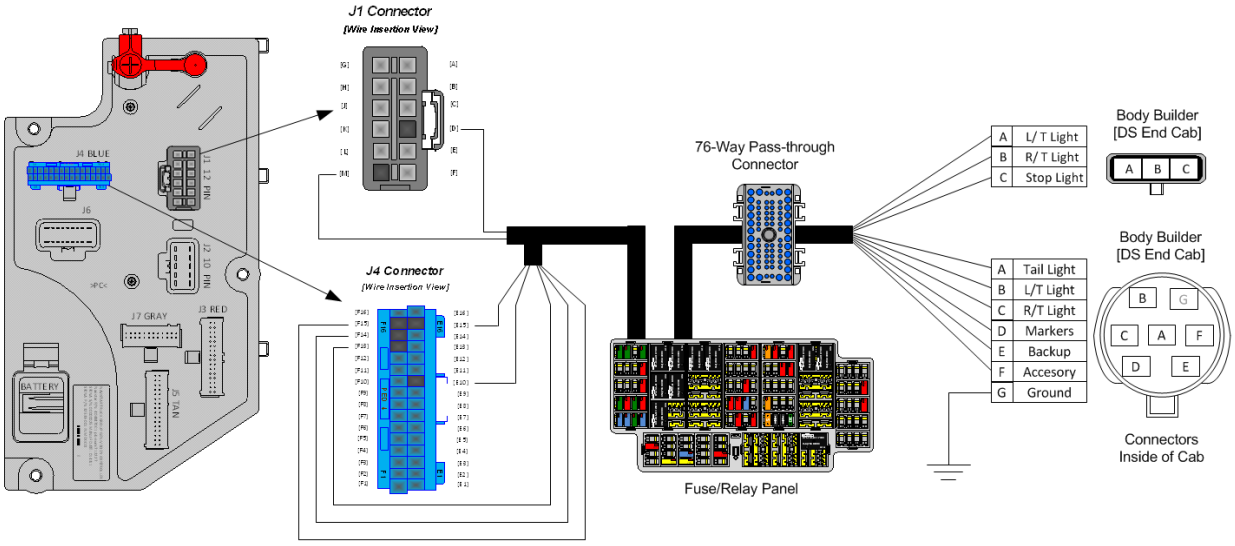

Body Controller Software Feature Codes:

- 597054 – BCMM PROG, TRAILER LIGHTING

Body Controller Software Feature Code Parameters:

Parameter	ID	Description	Default	Units	Min	Max	Step
Trailer_Left_Turn_ Lamp_OC_Current	3175	Trailer Left Lamp Open Circuit Detection Level value range	0	A	0	20	0.1
Trailer_Left_Turn_ Lamp_Low_Curren t	3177	Trailer Left Lamp Low Current Detection Level value range	0	A	0	20	0.1

Trailer_Left_Turn_Lamp_High_Current	3178	Trailer Left Lamp High Current Detection Level value range	15	A	0	20	0.1
Trailer_Right_Turn_Lamp_High_Current	3179	Trailer Right Lamp High Current Detection Level value range	15	A	0	20	0.1
Trailer_Right_Turn_Lamp_Low_Current	3180	Trailer Left Lamp Low Current Detection Level value range	0	A	0	20	0.1
Trailer_Right_Turn_Lamp_OC_Current	3181	Trailer Left Lamp Open Circuit Detection Level value range	0	A	0	20	0.1
Trailer_Marker_Lamp_High_Current	3182	Trailer Marker Lamp High Current Detection Level value range	20	A	0	20	0.1
Trailer_Marker_Lamp_Low_Current	3183	Trailer Marker Lamp Low Current Detection Level value range	0	A	0	20	0.1
Trailer_Marker_Lamp_OC_Current	3184	Trailer Marker Lamp Open Circuit Detection Level value range	0	A	0	20	0.1
Trailer_Tail_Lamp_High_Current	3185	Trailer Tail Lamp High Current Detection Level value range	20	A	0	20	0.1
Trailer_Tail_Lamp_Low_Current	3186	Trailer Tail Lamp Low Current Detection Level value range	0	A	0	20	0.1
Trailer_Tail_Lamp_OC_Current	3187	Trailer Tail Lamp Open Circuit Detection Level value range	0	A	0	20	0.1

Parameter Definitions:

- **Trailer_Left_Turn_Lamp_OC_Current** – This parameter sets the minimum fuse level for the open circuit of the Trailer Left Turn Lamp. If the current draw is below this value, a fault will be set.
- **Trailer_Left_Turn_Lamp_Low_Current** – This parameter sets the minimum fuse level for normal operation of the Trailer Left Turn Lamp. If the current draw exceeds this value, the circuit will open
- **Trailer_Left_Turn_Lamp_High_Current** – This parameter sets the maximum fuse level for normal operation of the Trailer Left Turn Lamp. If the current draw exceeds this value, the circuit will open.
- **Trailer_Right_Turn_Lamp_High_Current** – This parameter sets the maximum fuse level for normal operation of the Trailer Right Turn Lamp. If the current draw exceeds this value, the circuit will open.
- **Trailer_Right_Turn_Lamp_Low_Current** – This parameter sets the minimum fuse level for normal operation of the Trailer Right Turn Lamp. If the current draw exceeds this value, the circuit will open
- **Trailer_Right_Turn_Lamp_OC_Current** – This parameter sets the minimum fuse level for the open circuit of the Trailer Right Turn Lamp. If the current draw is below this value, a fault will be set.
- **Trailer_Marker_Lamp_High_Current** – This parameter sets the maximum fuse level for normal operation of the Trailer Marker Lamp. If the current draw exceeds this value, the circuit will open.

- **Trailer_Marker_Lamp_Low_Current** – This parameter sets the minimum fuse level for normal operation of the Trailer Marker Lamp. If the current draw exceeds this value, the circuit will open
- **Trailer_Marker_Lamp_OC_Current** – This parameter sets the minimum fuse level for the open circuit of the Trailer Marker Lamp. If the current draw is below this value, a fault will be set.
- **Trailer_Tail_Lamp_High_Current** – This parameter sets the maximum fuse level for normal operation of the Trailer Tail Lamp. If the current draw exceeds this value, the circuit will open.
- **Trailer_Tail_Lamp_Low_Current** – This parameter sets the minimum fuse level for normal operation of the Trailer Tail Lamp. If the current draw exceeds this value, the circuit will open
- **Trailer_Tail_Lamp_OC_Current** – This parameter sets the minimum fuse level for the open circuit of the Trailer Tail Lamp. If the current draw is below this value, a fault will be set.

Parts Associated with This Feature:

PART NUMBER	DESCRIPTION
7-WAY BODY LIGHTING CONNECTOR 4450 (VEHICLE HARNESS)	
2039311C91	7–WAY CONNECTOR
2039342C1	7-WAYCONNECTOR LOCK
2039344C1	12-GAUGE TERMINAL
3535486C1	14-GAUGE TERMINAL
2039343C1	16-GAUGE TERMINAL
0589390C1	12-GAUGE TERMINAL SEAL
0589391C1	14-GAUGE TERMINAL SEAL
1652325C1	16-GAUGE TERMINAL SEAL
7-WAY BODY LIGHTING MATING CONNECTOR FOR 4450 (BODY BUILDER HARNESS)	
2039312C91	7-WAY CONNECTOR (SUPPLIED BY CUSTOMER)
2039342C1	7-WAY CONNECTOR LOCK
1687848C1	12-GAUGE TERMINAL
2033912C1	14-GAUGE TERMINAL
2033911C1	16-GAUGE TERMINAL
0589390C1	12-GAUGE TERMINAL SEAL
0589391C1	14-GAUGE TERMINAL SEAL
1652325C1	16-GAUGE TERMINAL SEAL
3-WAY BODY LIGHTING CONNECTOR 4460 (VEHICLE HARNESS)	
1686834C1	3-WAY CONNECTOR
1664408C1	3-WAY CONNECTOR LOCK
2033816C1	14-GAUGE TERMINAL
2033819C1	16-GAUGE TERMINAL
589391C1	14-GAUGE TERMINAL SEAL
1652325C1	16-GAUGE TERMINAL SEAL
3-WAY BODY LIGHTING MATING CONNECTOR FOR 4460 (BODY BUILDER HARNESS)	

3553961C1	3-WAY CONNECTOR (SUPPLIED BY CUSTOMER)
3554019C1	3-WAY CONNECTOR LOCK
2033912C1	14-GAUGE TERMINAL
2033911C1	16-GAUGE TERMINAL
0589391C1	14-GAUGE TERMINAL SEAL
1652325C1	16-GAUGE TERMINAL SEAL

Parts Associated with Body Builder Wiring Feature

How to Add This Feature:

Note: This feature is not easy to install, and every effort should be made to order the vehicle with the desired code. Refer to the 7-way socket at EOF for information covering circuit connections and use of the circuit diagram manual to aid in assembly.

How to Test This Feature:

When additional lights are added, test those lights for functionality and test the connection point for battery voltage.

For Combined Stop/Tail/Turn:

1. Turn on vehicle headlights.
2. Verify that the tail light circuit, Cavity A of 7-way socket with brown 14-gauge wire, has battery voltage
levels present.
3. Verify that the marker light circuit, Cavity D of 7-way socket with brown 14-gauge wire, has battery voltage levels present
4. Turn OFF vehicle headlights.
5. Turn on left turn signal in vehicle.
6. Verify that left turn/stop circuit, Cavity B of 7-way socket with yellow 16-gauge wire, is cycling between
battery voltage and GND.
7. Turn off vehicle left turn signal.
8. Turn on right turn signal in vehicle.
9. Verify that right turn/stop circuit, Cavity C of 7-way socket with light green 16-gauge wire, is cycling between battery voltage and GND.
10. Turn off vehicle right turn signal.
11. Put the vehicle in reverse.
12. Verify that the body backup lights are working correctly.
13. Verify that the backup light circuit, Cavity E of 7-way socket with light blue 16-gauge wire, has battery voltage levels present.
14. Take the vehicle out of reverse.
15. Turn key to accessory or IGN position.
16. Verify that the accessory circuit, Cavity F of 7-way socket with light blue 14-gauge wire, has battery voltage levels present.
17. Press the vehicle brake pedal.
18. Verify that the brake lights are functioning correctly.
19. Verify that the left turn/stop circuit, Cavity B of 7-way socket with yellow 16-gauge wire, AND the right

turn/stop circuit, Cavity C of 7-way socket with light green 16-gauge wire have battery voltage levels present.
20. Release brake pedal.

For Separate Stop and Turn:

1. Turn off vehicle headlights.
2. Turn on left turn signal in vehicle.
3. Verify that left turn circuit, Cavity A of 3-way socket with yellow 16-gauge wire, is cycling between battery voltage and GND.
4. Turn off vehicle left turn signal.
5. Turn on right turn signal in vehicle.
6. Verify that right turn circuit, Cavity B of 3-way socket with light green 16-gauge wire, is cycling between battery voltage and GND.
7. Turn off vehicle right turn signal.
8. Press the vehicle brake pedal.
9. Verify that the stop circuit, Cavity C of 3-way socket with Red 14-gauge wire, has battery voltage levels present
10. Release brake pedal.

Note: This feature uses body controller-based software controls which can be diagnosed with The Navistar® Diamond Logic® Builder software (see local dealer if not owned).

References:
Refer to the applicable International® Circuit Diagrams and Service Manuals.

16.3. 08HAB: BODY BUILDER WIRING, Back of Day Cab at Left Frame or Under Sleeper, Extended or Crew Cab at Left Frame; Includes Sealed Connectors for Tail/Amber Turn/Marker/Backup/Ground and Sealed Connector for Stop/Turn

Feature Applicability to Vehicle Platforms:

- Heavy Extreme (HX) 2021 and Newer

Extended Description: This feature includes one 14-way sealed connector at the back of cab. The 14-way connector includes taillight, clearance, backup, combined stop/turn, separate stop/turn, and ground circuits for the body builder to connect to in place of wiring into the chassis equipped end of frame light circuits.

System Block Diagram:

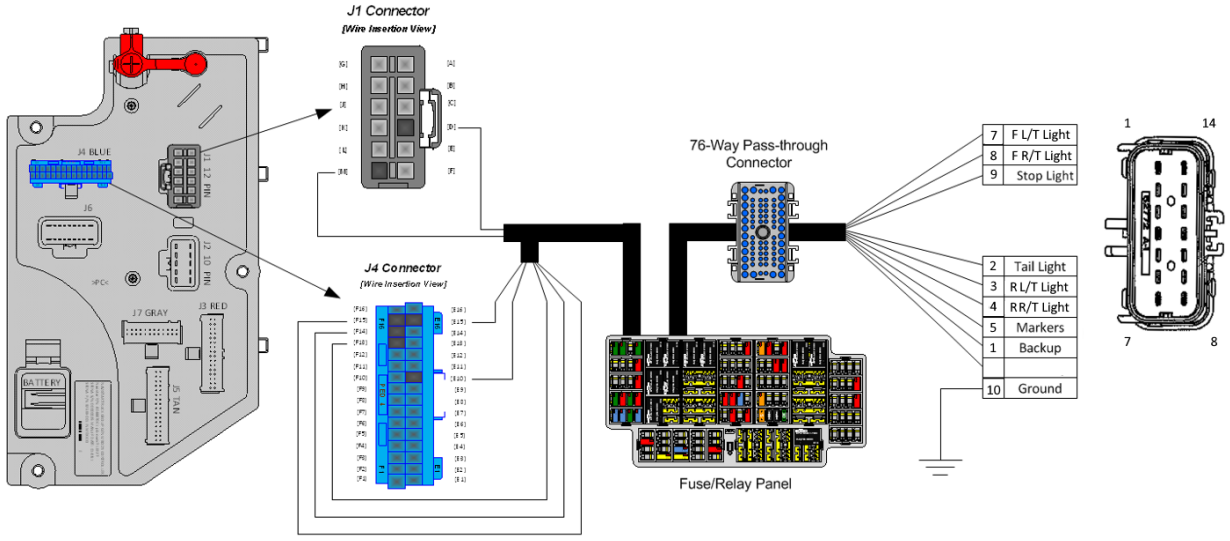

Body Controller Software Feature Codes:

- 597054 – BCM PROG, TRAILER LIGHTING

Body Controller Software Feature Code Parameters:

Parameter	ID	Description	Default	Units	Min	Max	Step
Trailer_Left_Turn_Lamp_OC_Current	3175	Trailer Left Lamp Open Circuit Detection Level value range	0	A	0	20	0.1
Trailer_Left_Turn_Lamp_Low_Current	3177	Trailer Left Lamp Low Current Detection Level value range	0	A	0	20	0.1
Trailer_Left_Turn_Lamp_High_Current	3178	Trailer Left Lamp High Current Detection Level value range	15	A	0	20	0.1
Trailer_Right_Turn_Lamp_High_Current	3179	Trailer Right Lamp High Current Detection Level value range	15	A	0	20	0.1

Trailer_Right_Turn_Lamp_Low_Current	3180	Trailer Left Lamp Low Current Detection Level value range	0	A	0	20	0.1
Trailer_Right_Turn_Lamp_OC_Current	3181	Trailer Left Lamp Open Circuit Detection Level value range	0	A	0	20	0.1
Trailer_Marker_Lamp_High_Current	3182	Trailer Marker Lamp High Current Detection Level value range	20	A	0	20	0.1
Trailer_Marker_Lamp_Low_Current	3183	Trailer Marker Lamp Low Current Detection Level value range	0	A	0	20	0.1
Trailer_Marker_Lamp_OC_Current	3184	Trailer Marker Lamp Open Circuit Detection Level value range	0	A	0	20	0.1
Trailer_Tail_Lamp_High_Current	3185	Trailer Tail Lamp High Current Detection Level value range	20	A	0	20	0.1
Trailer_Tail_Lamp_Low_Current	3186	Trailer Tail Lamp Low Current Detection Level value range	0	A	0	20	0.1
Trailer_Tail_Lamp_OC_Current	3187	Trailer Tail Lamp Open Circuit Detection Level value range	0	A	0	20	0.1

Parameter Definitions:

- **Trailer_Left_Turn_Lamp_OC_Current** – This parameter sets the minimum fuse level for the open circuit of the Trailer Left Turn Lamp. If the current draw is below this value, a fault will be set.
- **Trailer_Left_Turn_Lamp_Low_Current** – This parameter sets the minimum fuse level for normal operation of the Trailer Left Turn Lamp. If the current draw exceeds this value, the circuit will open.
- **Trailer_Left_Turn_Lamp_High_Current** – This parameter sets the maximum fuse level for normal operation of the Trailer Left Turn Lamp. If the current draw exceeds this value, the circuit will open.
- **Trailer_Right_Turn_Lamp_High_Current** – This parameter sets the maximum fuse level for normal operation of the Trailer Right Turn Lamp. If the current draw exceeds this value, the circuit will open.
- **Trailer_Right_Turn_Lamp_Low_Current** – This parameter sets the minimum fuse level for normal operation of the Trailer Right Turn Lamp. If the current draw exceeds this value, the circuit will open.
- **Trailer_Right_Turn_Lamp_OC_Current** – This parameter sets the minimum fuse level for the open circuit of the Trailer Right Turn Lamp. If the current draw is below this value, a fault will be set.
- **Trailer_Marker_Lamp_High_Current** – This parameter sets the maximum fuse level for normal operation of the Trailer Marker Lamp. If the current draw exceeds this value, the circuit will open.
- **Trailer_Marker_Lamp_Low_Current** – This parameter sets the minimum fuse level for normal operation of the Trailer Marker Lamp. If the current draw exceeds this value, the circuit will open.
- **Trailer_Marker_Lamp_OC_Current** – This parameter sets the minimum fuse level for the open circuit of the Trailer Marker Lamp. If the current draw is below this value, a fault will be set.

- **Trailer_Tail_Lamp_High_Current** – This parameter sets the maximum fuse level for normal operation of the Trailer Tail Lamp. If the current draw exceeds this value, the circuit will open.
- **Trailer_Tail_Lamp_Low_Current** – This parameter sets the minimum fuse level for normal operation of the Trailer Tail Lamp. If the current draw exceeds this value, the circuit will open.
- **Trailer_Tail_Lamp_OC_Current** – This parameter sets the minimum fuse level for the open circuit of the Trailer Tail Lamp. If the current draw is below this value, a fault will be set.

Parts Associated with This Feature:

PART NUMBER	DESCRIPTION
14-WAY BODY LIGHTING CONNECTOR (VEHICLE HARNESS)	
3618231C1	14–WAY CONNECTOR
3612308C1	10 to12 - GAUGE TERMINAL 10762774 TIN
3618272C1	18 to 20 - GAUGE TERMINAL 10762776 TIN
3618273C1	14 to 16 - GAUGE TERMINAL 10757692 TIN
3626441C1	18 to 20 - GAUGE TERMINAL 15435215 GOLD
3627568C1	14 to 16 - GAUGE TERMINAL 13681974 GOLD
14-WAY BODY LIGHTING MATING CONNECTOR (BODY BUILDER HARNESS)	
3573078C1	14-WAY CONNECTOR (SUPPLIED BY CUSTOMER)
3613771C1	18 to 20 - GAUGE TERMINAL 10757690 TIN
3613770C1	14 to 16 - GAUGE TERMINAL 10762803 TIN
3573077C1	18 to 20 - GAUGE TERMINAL 15422510 GOLD
3612307C1	10 to12 - GAUGE TERMINAL 10762802 TIN
3753255C1	10 to 12 - GAUGE TERMINAL 15512740 GOLD
3573076C1	Plug
3989901C1	14 to 16 - GAUGE TERMINAL 13681975 GOLD

Parts Associated with Body Builder Wiring Feature

How to Add This Feature:

Note: This feature is not easy to install, and every effort should be made to order the vehicle with the desired code. Refer to the 14-way socket at BOC for information covering circuit connections and use of the circuit diagram manual to aid in assembly.

How to Test This Feature:

When additional lights are added, test those lights for functionality and test the connection point for battery voltage.

For Combined Stop/Tail/Turn:

1. Turn on vehicle headlights.
2. Verify that the taillight circuit, Pin 2 of 14-way socket with Brown wire, has battery voltage levels present.

3. Verify that the marker light circuit, Pin 5 of 14-way socket with Brown wire, has battery voltage levels present.
4. Turn OFF vehicle headlights.
5. Turn on left turn signal in vehicle.
6. Verify that left turn/stop circuit, Pin 3 of 14-way socket with Orange wire, is cycling between battery voltage and GND.
7. Turn off vehicle left turn signal.
8. Turn on right turn signal in vehicle.
9. Verify that right turn/stop circuit, Pin 4 of 14-way socket with Orange wire, is cycling between battery voltage and GND.
10. Turn off vehicle right turn signal.
11. Put the vehicle in reverse.
12. Verify that the body backup lights are working correctly.
13. Verify that the backup light circuit, Pin 1 of 14-way socket with light blue, has battery voltage levels present.
14. Take the vehicle out of reverse.
15. Press the vehicle brake pedal.
16. Verify that the brake lights are functioning correctly.
17. Verify that the left turn/stop circuit, Pin 3 of 14-way socket with Orange wire, AND the right turn/stop circuit, Pin 4 of 14-way socket with light green wire have battery voltage levels present.
18. Release brake pedal.

For Separate Stop and Turn:

1. Turn off vehicle headlights.
2. Turn on left turn signal in vehicle.
3. Verify that left turn circuit, Pin 7 of 14-way socket with yellow wire, is cycling between battery voltage and GND.
4. Turn off vehicle left turn signal.
5. Turn on right turn signal in vehicle.
6. Verify that right turn circuit, Pin 8 of 14-way socket with light green wire, is cycling between battery voltage and GND.
7. Turn off vehicle right turn signal.
8. Press the vehicle brake pedal.
9. Verify that the stop circuit, Pin 9 of 14-way socket with Red wire, has battery voltage levels present
10. Release brake pedal.

Note: This feature uses body controller-based software controls which can be diagnosed with the Navistar® Diamond Logic® Builder software (see local dealer if not owned).

References:
Refer to the applicable International® Circuit Diagrams and Service Manuals

16.4. 08HAE: BODY BUILDER WIRING, Rear of Frame; Includes Sealed Connectors for Tail/Amber Turn/Marker/ Backup/Accessory Power/Ground and Sealed Connector for Stop/Turn.

Feature Applicability to Vehicle Platforms:

- Heavy Vocational (HV)
- Line Haul Transport (LT)
- Medium Vocational (MV)

Extended Description: This feature includes one 7-way and one 3-way sealed connector at the rear of the frame. The 7-way connector includes tail light, clearance, backup, stop/turn, accessory and ground circuits for the body builder to connect to in place of wiring into the chassis equipped end of frame light circuits. The 3-way connector includes circuits for separate stop and turn lights if needed.

System Block Diagram:

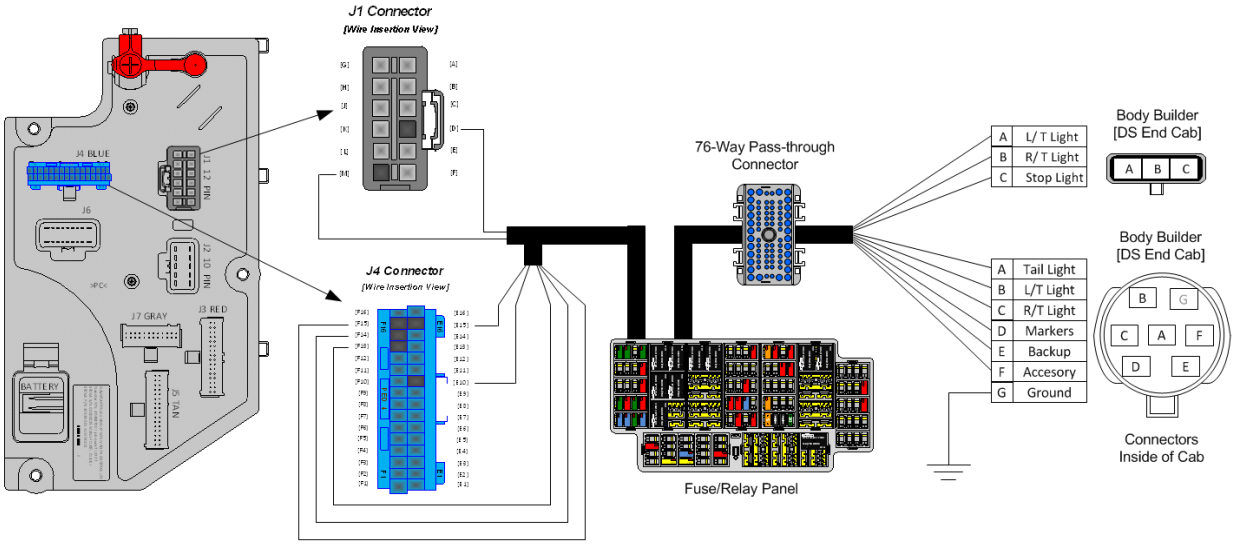

Body Controller Software Feature Codes:

- 597054 – BCMM PROG, TRAILER LIGHTING

Body Controller Software Feature Code Parameters:

Parameter	ID	Description	Default	Units	Min	Max	Step
Trailer_Left_Turn_Lamp_OC_Current	3175	Trailer Left Lamp Open Circuit Detection Level value range	0	A	0	20	0.1
Trailer_Left_Turn_Lamp_Low_Current	3177	Trailer Left Lamp Low Current Detection Level value range	0	A	0	20	0.1

Trailer_Left_Turn_Lamp_High_Current	3178	Trailer Left Lamp High Current Detection Level value range	15	A	0	20	0.1
Trailer_Right_Turn_Lamp_High_Current	3179	Trailer Right Lamp High Current Detection Level value range	15	A	0	20	0.1
Trailer_Right_Turn_Lamp_Low_Current	3180	Trailer Left Lamp Low Current Detection Level value range	0	A	0	20	0.1
Trailer_Right_Turn_Lamp_OC_Current	3181	Trailer Left Lamp Open Circuit Detection Level value range	0	A	0	20	0.1
Trailer_Marker_Lamp_High_Current	3182	Trailer Marker Lamp High Current Detection Level value range	20	A	0	20	0.1
Trailer_Marker_Lamp_Low_Current	3183	Trailer Marker Lamp Low Current Detection Level value range	0	A	0	20	0.1
Trailer_Marker_Lamp_OC_Current	3184	Trailer Marker Lamp Open Circuit Detection Level value range	0	A	0	20	0.1
Trailer_Tail_Lamp_High_Current	3185	Trailer Tail Lamp High Current Detection Level value range	20	A	0	20	0.1
Trailer_Tail_Lamp_Low_Current	3186	Trailer Tail Lamp Low Current Detection Level value range	0	A	0	20	0.1
Trailer_Tail_Lamp_OC_Current	3187	Trailer Tail Lamp Open Circuit Detection Level value range	0	A	0	20	0.1

Parameter Definitions:

- **Trailer_Left_Turn_Lamp_OC_Current** – This parameter sets the minimum fuse level for the open circuit of the Trailer Left Turn Lamp. If the current draw is below this value, a fault will be set.
- **Trailer_Left_Turn_Lamp_Low_Current** – This parameter sets the minimum fuse level for normal operation of the Trailer Left Turn Lamp. If the current draw exceeds this value, the circuit will open
- **Trailer_Left_Turn_Lamp_High_Current** – This parameter sets the maximum fuse level for normal operation of the Trailer Left Turn Lamp. If the current draw exceeds this value, the circuit will open.
- **Trailer_Right_Turn_Lamp_High_Current** – This parameter sets the maximum fuse level for normal operation of the Trailer Right Turn Lamp. If the current draw exceeds this value, the circuit will open.
- **Trailer_Right_Turn_Lamp_Low_Current** – This parameter sets the minimum fuse level for normal operation of the Trailer Right Turn Lamp. If the current draw exceeds this value, the circuit will open
- **Trailer_Right_Turn_Lamp_OC_Current** – This parameter sets the minimum fuse level for the open circuit of the Trailer Right Turn Lamp. If the current draw is below this value, a fault will be set.
- **Trailer_Marker_Lamp_High_Current** – This parameter sets the maximum fuse level for normal operation of the Trailer Marker Lamp. If the current draw exceeds this value, the circuit will open.

- **Trailer_Marker_Lamp_Low_Current** – This parameter sets the minimum fuse level for normal operation of the Trailer Marker Lamp. If the current draw exceeds this value, the circuit will open
- **Trailer_Marker_Lamp_OC_Current** – This parameter sets the minimum fuse level for the open circuit of the Trailer Marker Lamp. If the current draw is below this value, a fault will be set.
- **Trailer_Tail_Lamp_High_Current** – This parameter sets the maximum fuse level for normal operation of the Trailer Tail Lamp. If the current draw exceeds this value, the circuit will open.
- **Trailer_Tail_Lamp_Low_Current** – This parameter sets the minimum fuse level for normal operation of the Trailer Tail Lamp. If the current draw exceeds this value, the circuit will open
- **Trailer_Tail_Lamp_OC_Current** – This parameter sets the minimum fuse level for the open circuit of the Trailer Tail Lamp. If the current draw is below this value, a fault will be set.

Parts Associated with This Feature:

PART NUMBER	DESCRIPTION
7-WAY BODY LIGHTING CONNECTOR 4450 (VEHICLE HARNESS)	
2039311C91	7–WAY CONNECTOR
2039342C1	7-WAYCONNECTOR LOCK
2039344C1	12-GAUGE TERMINAL
3535486C1	14-GAUGE TERMINAL
2039343C1	16-GAUGE TERMINAL
0589390C1	12-GAUGE TERMINAL SEAL
0589391C1	14-GAUGE TERMINAL SEAL
1652325C1	16-GAUGE TERMINAL SEAL
7-WAY BODY LIGHTING MATING CONNECTOR FOR 4450 (BODY BUILDER HARNESS)	
2039312C91	7-WAY CONNECTOR (SUPPLIED BY CUSTOMER)
2039342C1	7-WAY CONNECTOR LOCK
1687848C1	12-GAUGE TERMINAL
2033912C1	14-GAUGE TERMINAL
2033911C1	16-GAUGE TERMINAL
0589390C1	12-GAUGE TERMINAL SEAL
0589391C1	14-GAUGE TERMINAL SEAL
1652325C1	16-GAUGE TERMINAL SEAL
3-WAY BODY LIGHTING CONNECTOR 4460 (VEHICLE HARNESS)	
1686834C1	3-WAY CONNECTOR
1664408C1	3-WAY CONNECTOR LOCK
2033816C1	14-GAUGE TERMINAL
2033819C1	16-GAUGE TERMINAL
589391C1	14-GAUGE TERMINAL SEAL
1652325C1	16-GAUGE TERMINAL SEAL
3-WAY BODY LIGHTING MATING CONNECTOR FOR 4460 (BODY BUILDER HARNESS)	

3553961C1	3-WAY CONNECTOR (SUPPLIED BY CUSTOMER)
3554019C1	3-WAY CONNECTOR LOCK
2033912C1	14-GAUGE TERMINAL
2033911C1	16-GAUGE TERMINAL
0589391C1	14-GAUGE TERMINAL SEAL
1652325C1	16-GAUGE TERMINAL SEAL

Parts Associated with Body Builder Wiring Feature

How to Add This Feature:

Note: This feature is not easy to install, and every effort should be made to order the vehicle with the desired code. Refer to the 7-way socket at EOF for information covering circuit connections and use of the circuit diagram manual to aid in assembly.

How to Test This Feature:

When additional lights are added, test those lights for functionality and test the connection point for battery voltage.

For Combined Stop/Tail/Turn:

1. Turn on vehicle headlights.
2. Verify that the tail light circuit, Cavity A of 7-way socket with brown 14-gauge wire, has battery voltage
levels present.
3. Verify that the marker light circuit, Cavity D of 7-way socket with brown 14-gauge wire, has battery voltage levels present
4. Turn OFF vehicle headlights.
5. Turn on left turn signal in vehicle.
6. Verify that left turn/stop circuit, Cavity B of 7-way socket with yellow 16-gauge wire, is cycling between
battery voltage and GND.
7. Turn off vehicle left turn signal.
8. Turn on right turn signal in vehicle.
9. Verify that right turn/stop circuit, Cavity C of 7-way socket with light green 16-gauge wire, is cycling between battery voltage and GND.
10. Turn off vehicle right turn signal.
11. Put the vehicle in reverse.
12. Verify that the body backup lights are working correctly.
13. Verify that the backup light circuit, Cavity E of 7-way socket with light blue 16-gauge wire, has battery voltage levels present.
14. Take the vehicle out of reverse.
15. Turn key to accessory or IGN position.
16. Verify that the accessory circuit, Cavity F of 7-way socket with light blue 14-gauge wire, has battery voltage levels present.
17. Press the vehicle brake pedal.
18. Verify that the brake lights are functioning correctly.
19. Verify that the left turn/stop circuit, Cavity B of 7-way socket with yellow 16-gauge wire, AND the right

turn/stop circuit, Cavity C of 7-way socket with light green 16-gauge wire have battery voltage levels present.
20. Release brake pedal.

For Separate Stop and Turn:

1. Turn off vehicle headlights.
2. Turn on left turn signal in vehicle.
3. Verify that left turn circuit, Cavity A of 3-way socket with yellow 16-gauge wire, is cycling between battery voltage and GND.
4. Turn off vehicle left turn signal.
5. Turn on right turn signal in vehicle.
6. Verify that right turn circuit, Cavity B of 3-way socket with light green 16-gauge wire, is cycling between battery voltage and GND.
7. Turn off vehicle right turn signal.
8. Press the vehicle brake pedal.
9. Verify that the stop circuit, Cavity C of 3-way socket with Red 14-gauge wire, has battery voltage levels present
10. Release brake pedal.

Note: This feature uses body controller-based software controls which can be diagnosed with The Navistar® Diamond Logic® Builder software (see local dealer if not owned).

References:
Refer to the applicable International® Circuit Diagrams and Service Manuals.

16.5. 08HAE: BODY BUILDER WIRING, Rear of Frame; Includes Sealed Connector for Tail/Amber Turn/Marker/ Backup/Accessory Power/Ground and Sealed Connector for Stop/Turn.

Feature Applicability to Vehicle Platforms:

- Heavy Extreme (HX) 2021 and Newer

Extended Description: This feature includes one 14-way sealed connector at the rear of the frame. The 14-way connector includes taillight, clearance, backup, combined stop/turn, separate stop turns and ground circuits for the body builder to connect to in place of wiring into the chassis equipped end of frame light circuits.

System Block Diagram:

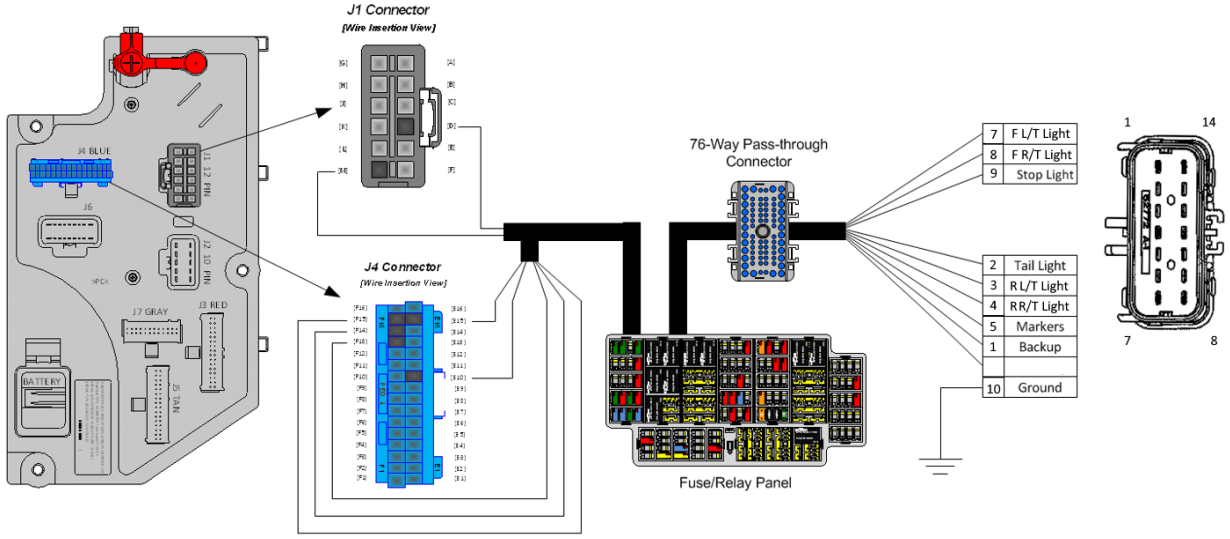

Body Controller Software Feature Codes:

- 597054 – BCM PROG, TRAILER LIGHTING

Body Controller Software Feature Code Parameters:

Parameter	ID	Description	Default	Units	Min	Max	Step
Trailer_Left_Turn_Lamp_OC_Current	3175	Trailer Left Lamp Open Circuit Detection Level value range	0	A	0	20	0.1
Trailer_Left_Turn_Lamp_Low_Current	3177	Trailer Left Lamp Low Current Detection Level value range	0	A	0	20	0.1
Trailer_Left_Turn_Lamp_High_Current	3178	Trailer Left Lamp High Current Detection Level value range	15	A	0	20	0.1

Trailer_Right_Turn_Lamp_High_Current	3179	Trailer Right Lamp High Current Detection Level value range	15	A	0	20	0.1
Trailer_Right_Turn_Lamp_Low_Current	3180	Trailer Left Lamp Low Current Detection Level value range	0	A	0	20	0.1
Trailer_Right_Turn_Lamp_OC_Current	3181	Trailer Left Lamp Open Circuit Detection Level value range	0	A	0	20	0.1
Trailer_Marker_Lamp_High_Current	3182	Trailer Marker Lamp High Current Detection Level value range	20	A	0	20	0.1
Trailer_Marker_Lamp_Low_Current	3183	Trailer Marker Lamp Low Current Detection Level value range	0	A	0	20	0.1
Trailer_Marker_Lamp_OC_Current	3184	Trailer Marker Lamp Open Circuit Detection Level value range	0	A	0	20	0.1
Trailer_Tail_Lamp_High_Current	3185	Trailer Tail Lamp High Current Detection Level value range	20	A	0	20	0.1
Trailer_Tail_Lamp_Low_Current	3186	Trailer Tail Lamp Low Current Detection Level value range	0	A	0	20	0.1
Trailer_Tail_Lamp_OC_Current	3187	Trailer Tail Lamp Open Circuit Detection Level value range	0	A	0	20	0.1

Parameter Definitions:

- **Trailer_Left_Turn_Lamp_OC_Current** – This parameter sets the minimum fuse level for the open circuit of the Trailer Left Turn Lamp. If the current draw is below this value, a fault will be set.
- **Trailer_Left_Turn_Lamp_Low_Current** – This parameter sets the minimum fuse level for normal operation of the Trailer Left Turn Lamp. If the current draw exceeds this value, the circuit will open.
- **Trailer_Left_Turn_Lamp_High_Current** – This parameter sets the maximum fuse level for normal operation of the Trailer Left Turn Lamp. If the current draw exceeds this value, the circuit will open.
- **Trailer_Right_Turn_Lamp_High_Current** – This parameter sets the maximum fuse level for normal operation of the Trailer Right Turn Lamp. If the current draw exceeds this value, the circuit will open.
- **Trailer_Right_Turn_Lamp_Low_Current** – This parameter sets the minimum fuse level for normal operation of the Trailer Right Turn Lamp. If the current draw exceeds this value, the circuit will open.
- **Trailer_Right_Turn_Lamp_OC_Current** – This parameter sets the minimum fuse level for the open circuit of the Trailer Right Turn Lamp. If the current draw is below this value, a fault will be set.
- **Trailer_Marker_Lamp_High_Current** – This parameter sets the maximum fuse level for normal operation of the Trailer Marker Lamp. If the current draw exceeds this value, the circuit will open.
- **Trailer_Marker_Lamp_Low_Current** – This parameter sets the minimum fuse level for normal operation of the Trailer Marker Lamp. If the current draw exceeds this value, the circuit will open.

- **Trailer_Marker_Lamp_OC_Current** – This parameter sets the minimum fuse level for the open circuit of the Trailer Marker Lamp. If the current draw is below this value, a fault will be set.
- **Trailer_Tail_Lamp_High_Current** – This parameter sets the maximum fuse level for normal operation of the Trailer Tail Lamp. If the current draw exceeds this value, the circuit will open.
- **Trailer_Tail_Lamp_Low_Current** – This parameter sets the minimum fuse level for normal operation of the Trailer Tail Lamp. If the current draw exceeds this value, the circuit will open.
- **Trailer_Tail_Lamp_OC_Current** – This parameter sets the minimum fuse level for the open circuit of the Trailer Tail Lamp. If the current draw is below this value, a fault will be set.

Parts Associated with This Feature:

PART NUMBER	DESCRIPTION
14-WAY BODY LIGHTING CONNECTOR (VEHICLE HARNESS)	
3618231C1	14–WAY CONNECTOR
3612308C1	10 to12 - GAUGE TERMINAL 10762774 TIN
3618272C1	18 to 20 - GAUGE TERMINAL 10762776 TIN
3618273C1	14 to 16 - GAUGE TERMINAL 10757692 TIN
3626441C1	18 to 20 - GAUGE TERMINAL 15435215 GOLD
3627568C1	14 to 16 - GAUGE TERMINAL 13681974 GOLD
14-WAY BODY LIGHTING MATING CONNECTOR (BODY BUILDER HARNESS)	
3573078C1	14-WAY CONNECTOR (SUPPLIED BY CUSTOMER)
3613771C1	18 to 20 - GAUGE TERMINAL 10757690 TIN
3613770C1	14 to 16 - GAUGE TERMINAL 10762803 TIN
3573077C1	18 to 20 - GAUGE TERMINAL 15422510 GOLD
3612307C1	10 to12 - GAUGE TERMINAL 10762802 TIN
3753255C1	10 to 12 - GAUGE TERMINAL 15512740 GOLD
3573076C1	Plug
3989901C1	14 to 16 - GAUGE TERMINAL 13681975 GOLD

Parts Associated with Body Builder Wiring Feature

How to Add This Feature:

Note: This feature is not easy to install, and every effort should be made to order the vehicle with the desired code. Refer to the 14-way socket at EOF for information covering circuit connections and use of the circuit diagram manual to aid in assembly.

How to Test This Feature:

When additional lights are added, test those lights for functionality and test the connection point for battery voltage.

For Combined Stop/Tail/Turn:

1. Turn on vehicle headlights.
2. Verify that the taillight circuit, Pin 2 of 14-way socket with Brown wire, has battery voltage levels present.
3. Verify that the marker light circuit, Pin 5 of 14-way socket with Brown wire, has battery voltage levels present.
4. Turn OFF vehicle headlights.
5. Turn on left turn signal in vehicle.
6. Verify that left turn/stop circuit, Pin 3 of 14-way socket with Orange wire, is cycling between battery voltage and GND.
7. Turn off vehicle left turn signal.
8. Turn on right turn signal in vehicle.
9. Verify that right turn/stop circuit, Pin 4 of 14-way socket with Orange wire, is cycling between battery voltage and GND.
10. Turn off vehicle right turn signal.
11. Put the vehicle in reverse.
12. Verify that the body backup lights are working correctly.
13. Verify that the backup light circuit, Pin 1 of 14-way socket with light blue, has battery voltage levels present.
14. Take the vehicle out of reverse.
15. Press the vehicle brake pedal.
16. Verify that the brake lights are functioning correctly.
17. Verify that the left turn/stop circuit, Pin 3 of 14-way socket with Orange wire, AND the right turn/stop circuit, Pin 4 of 14-way socket with light green wire have battery voltage levels present.
18. Release brake pedal.

For Separate Stop and Turn:

1. Turn off vehicle headlights.
2. Turn on left turn signal in vehicle.
3. Verify that left turn circuit, Pin 7 of 14-way socket with yellow wire, is cycling between battery voltage and GND.
4. Turn off vehicle left turn signal.
5. Turn on right turn signal in vehicle.
6. Verify that right turn circuit, Pin 8 of 14-way socket with light green wire, is cycling between battery voltage and GND.
7. Turn off vehicle right turn signal.
8. Press the vehicle brake pedal.
9. Verify that the stop circuit, Pin 9 of 14-way socket with Red wire, has battery voltage levels present
10. Release brake pedal.

Note: This feature uses body controller-based software controls which can be diagnosed with the Navistar® Diamond Logic® Builder software (see local dealer if not owned).

References:
Refer to the applicable International® Circuit Diagrams and Service Manuals

16.6. 08HAG: ELECTRIC TRAILER BRAKE/LIGHTS Accommodation Package to Rear of Frame (ROF); for Separate Trailer Stop, Tail, Turn, Marker Light Circuits; Includes Electric Trailer Brake Accommodation Package with Cab Connections for Mounting Customer- Installed Electric Brake Unit, Less Trailer Socket.

Feature Applicability to Vehicle Platforms:

- Heavy Vocational (HV)
- Medium Vocational (MV)
- Regional Haul (RH)
- Heavy Extreme (HX) 2021 and Newer

Extended Description: This feature provides a four-circuit breakout, blunt-cut with heat shrink covering located under the Instrument Panel (IP) on the right side of the steering column. The circuits include a Ground (GND) circuit, an electric brake feed to electric trailer brakes, a 30-Ampere (AMP) power circuit plus the stop lamp feed. The circuits are designed to work with all popular electric trailer brake controllers. The feature is designed to handle trailers with separate stop and turn lights. The seven circuits that connect to the trailer are located at the rear of frame and are blunt cut with heat shrink covering. The appropriate socket assembly needs to be added by the customer.

System Block Diagram:

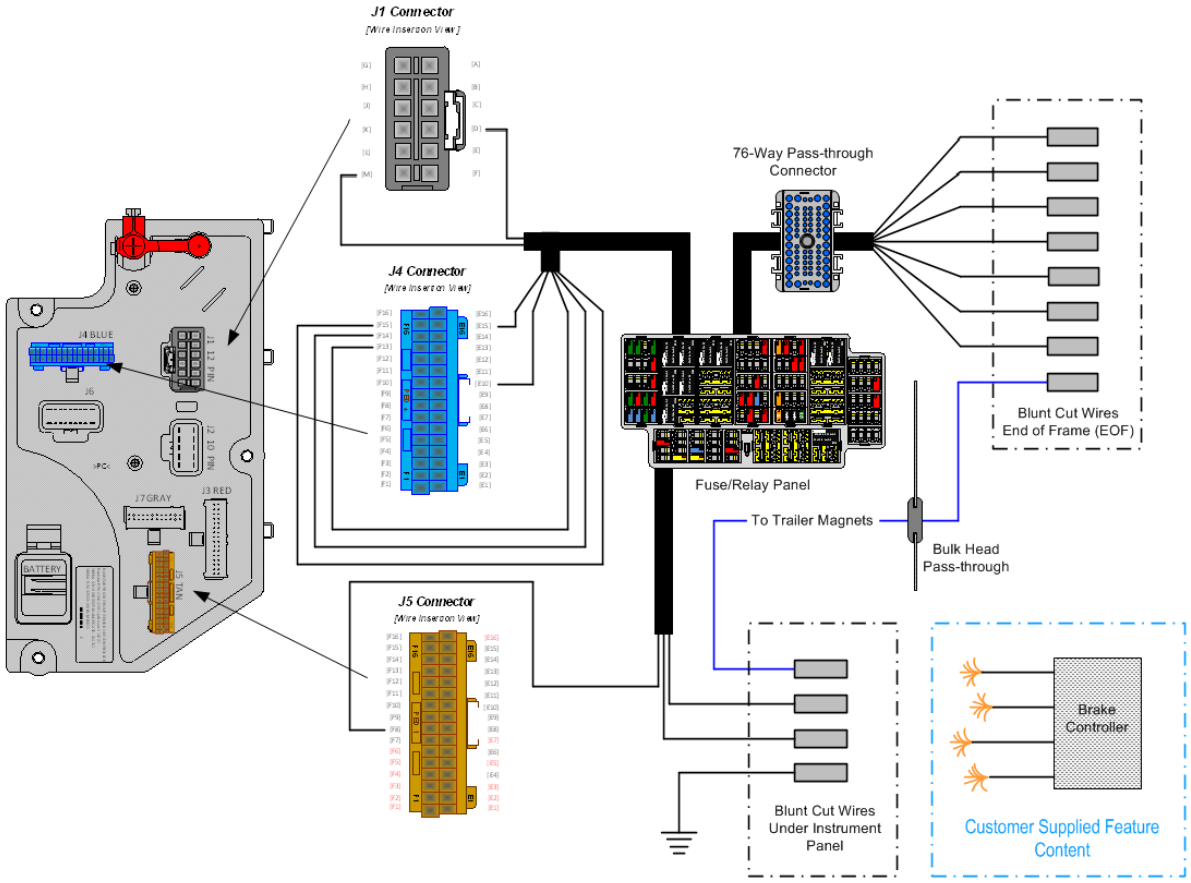

Body Controller Software Feature Codes:

- 597054 – BCM PROG, TRAILER LIGHTING
- 597193 – BCM PROG, ELECTRIC TRAILER BRAKE

Body Controller Software Feature Code Parameters:

Parameter	ID	Description	Default	Units	Min	Max		Step
Trailer_Left_Turn_Lamp_OC_Current	3175	Trailer Left Lamp Open Circuit Detection Level value range	0	A	0	20		0.1
Trailer_Left_Turn_Lamp_Low_Current	3177	Trailer Left Lamp Low Current Detection Level value range	0	A	0	20		0.1
Trailer_Left_Turn_Lamp_High_Current	3178	Trailer Left Lamp High Current Detection Level value range	15	A	0	20		0.1
Trailer_Right_Turn_Lamp_High_Current	3179	Trailer Right Lamp High Current Detection Level value range	15	A	0	20		0.1
Trailer_Right_Turn_Lamp_Low_Current	3180	Trailer Left Lamp Low Current Detection Level value range	0	A	0	20		0.1
Trailer_Right_Turn_Lamp_OC_Current	3181	Trailer Left Lamp Open Circuit Detection Level value range	0	A	0	20		0.1
Trailer_Marker_Lamp_High_Current	3182	Trailer Marker Lamp High Current Detection Level value range	20	A	0	20		0.1
Trailer_Marker_Lamp_Low_Current	3183	Trailer Marker Lamp Low Current Detection Level value range	0	A	0	20		0.1
Trailer_Marker_Lamp_OC_Current	3184	Trailer Marker Lamp Open Circuit Detection Level value range	0	A	0	20		0.1
Trailer_Tail_Lamp_High_Current	3185	Trailer Tail Lamp High Current Detection Level value range	20	A	0	20		0.1
Trailer_Tail_Lamp_Low_Current	3186	Trailer Tail Lamp Low Current Detection Level value range	0	A	0	20		0.1
Trailer_Tail_Lamp_OC_Current	3187	Trailer Tail Lamp Open Circuit Detection Level value range	0	A	0	20		0.1

Parameter Definitions:

- **Trailer_Left_Turn_Lamp_OC_Current** – This parameter sets the minimum fuse level for the open circuit of the Trailer Left Turn Lamp. If the current draw is below this value, a fault will be set.
- **Trailer_Left_Turn_Lamp_Low_Current** – This parameter sets the minimum fuse level for normal operation of the Trailer Left Turn Lamp. If the current draw exceeds this value, the circuit will open
- **Trailer_Left_Turn_Lamp_High_Current** – This parameter sets the maximum fuse level for normal operation of the Trailer Left Turn Lamp. If the current draw exceeds this value, the circuit will open.
- **Trailer_Right_Turn_Lamp_High_Current** – This parameter sets the maximum fuse level for normal operation of the Trailer Right Turn Lamp. If the current draw exceeds this value, the circuit will open.

- **Trailer_Right_Turn_Lamp_Low_Current** – This parameter sets the minimum fuse level for normal operation of the Trailer Right Turn Lamp. If the current draw exceeds this value, the circuit will open.
- **Trailer_Right_Turn_Lamp_OC_Current** – This parameter sets the minimum fuse level for the open circuit of the Trailer Right Turn Lamp. If the current draw is below this value, a fault will be set.
- **Trailer_Marker_Lamp_High_Current** – This parameter sets the maximum fuse level for normal operation of the Trailer Marker Lamp. If the current draw exceeds this value, the circuit will open.
- **Trailer_Marker_Lamp_Low_Current** – This parameter sets the minimum fuse level for normal operation of the Trailer Marker Lamp. If the current draw exceeds this value, the circuit will open.
- **Trailer_Marker_Lamp_OC_Current** – This parameter sets the minimum fuse level for the open circuit of the Trailer Marker Lamp. If the current draw is below this value, a fault will be set.
- **Trailer_Tail_Lamp_High_Current** – This parameter sets the maximum fuse level for normal operation of the Trailer Tail Lamp. If the current draw exceeds this value, the circuit will open.
- **Trailer_Tail_Lamp_Low_Current** – This parameter sets the minimum fuse level for normal operation of the Trailer Tail Lamp. If the current draw exceeds this value, the circuit will open.
- **Trailer_Tail_Lamp_OC_Current** – This parameter sets the minimum fuse level for the open circuit of the Trailer Tail Lamp. If the current draw is below this value, a fault will be set.

How to Add This Feature:
Feature 08HAA is not available with code 08HAG and 08HAH Electric Trailer Brake or codes 08TME and 08TMG Trailer Connection Socket and 08THH Aux Trailer Socket with Center Pin Circuit. If the vehicle has any of these codes, 08HAA cannot be installed in the vehicle.

How to Test This Feature:
1. Make proper trailer connections.
2. Turn on headlights.
3. Verify that the brown taillight wire and the black identification light wire have battery voltage levels present.
4. Turn off headlights.
5. Press the footbrake.
6. Verify that the red brake wire has battery voltage levels present.
7. Release the footbrake.
8. Turn on the left turn signal.
9. Verify that the yellow left turn signal wire is cycling between battery voltage and GND.
10. Turn off left turn signal.
11. Turn on the right turn signal.

12. Verify that the light green right turn signal wire is cycling between battery voltage and GND.
13. Turn off right turn signal.
14. Activate trailer brakes with the trailer brake controller.
15. Verify that the dark blue electric trailer brake wire has variable voltage levels present commensurate with the position of the brake controller lever.
16. Verify that trailer brakes are functioning correctly by calibrating the electric trailer brake controller according to the manufacturer's instructions.

Note: This feature uses body controller-based software controls which can be diagnosed with the Navistar® Diamond Logic® Builder software (see local dealer if not owned).

References:
Refer to the applicable International® Circuit Diagrams and Service Manuals

16.7. 08HAH: ELECTRIC TRAILER BRAKE/LIGHTS Accommodation Package to Rear of Frame (ROF); for Combined Trailer Stop, Tail, Turn, Marker Light Circuits; Includes Electric Trailer Brake Accommodation Package with Cab Connections for Mounting Customer- Installed Electric Brake Unit, Less Trailer Socket.

Feature Applicability to Vehicle Platforms:

- Heavy Vocational (HV)
- Medium Vocational (MV)
- Heavy Extreme (HX) 2021 and Newer

Extended Description: This feature provides a four-circuit breakout, blunt-cut with heat shrink covering located under the Instrument Panel (IP) on the right side of the steering column. The circuits include a Ground (GND) circuit, an electric brake feed to electric trailer brakes, a 30-Ampere (AMP) power circuit plus the stop lamp feed. The circuits are designed to work with all popular electric trailer brake controllers. The feature is designed to handle trailers with combined stop and turn lights. The seven circuits that connect to the trailer are located at the rear of frame and are blunt cut with heat shrink covering. The appropriate socket assembly needs to be added by the customer.

System Block Diagram:

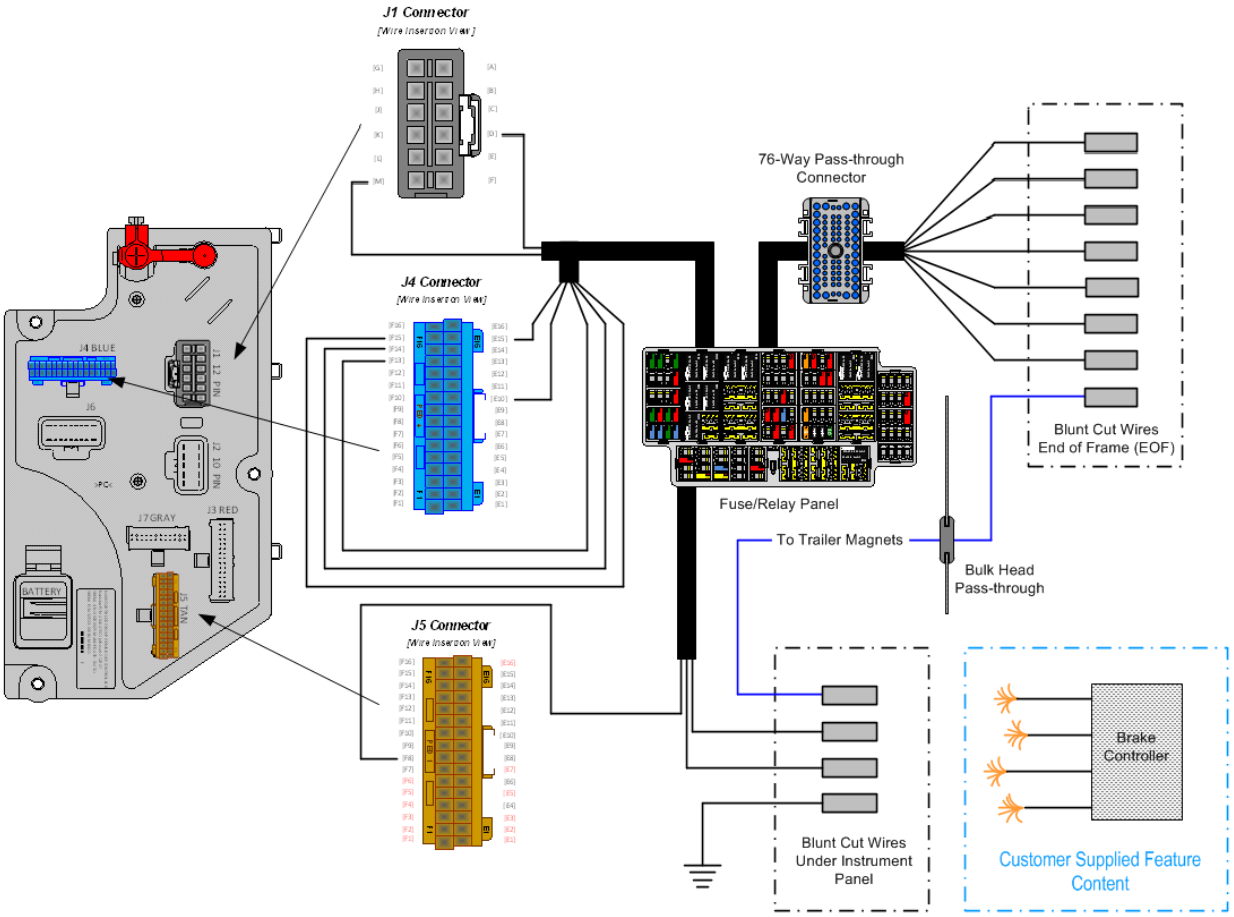

Body Controller Software Feature Codes:

- 597054 – BCM PROG, TRAILER LIGHTING
- 597193 – BCM PROG, ELECTRIC TRAILER BRAKE

Body Controller Software Feature Code Parameters:

Parameter	ID	Description	Default	Units	Min	Max	Step
Trailer_Left_Turn_Lamp_OC_Current	3175	Trailer Left Lamp Open Circuit Detection Level value range	0	A	0	20	0.1
Trailer_Left_Turn_Lamp_Low_Current	3177	Trailer Left Lamp Low Current Detection Level value range	0	A	0	20	0.1
Trailer_Left_Turn_Lamp_High_Current	3178	Trailer Left Lamp High Current Detection Level value range	15	A	0	20	0.1
Trailer_Right_Turn_Lamp_High_Current	3179	Trailer Right Lamp High Current Detection Level value range	15	A	0	20	0.1
Trailer_Right_Turn_Lamp_Low_Current	3180	Trailer Left Lamp Low Current Detection Level value range	0	A	0	20	0.1

Trailer_Right_Turn_Lamp_OC_Current	3181	Trailer Left Lamp Open Circuit Detection Level value range	0	A	0	20	0.1
Trailer_Marker_Lamp_High_Current	3182	Trailer Marker Lamp High Current Detection Level value range	20	A	0	20	0.1
Trailer_Marker_Lamp_Low_Current	3183	Trailer Marker Lamp Low Current Detection Level value range	0	A	0	20	0.1
Trailer_Marker_Lamp_OC_Current	3184	Trailer Marker Lamp Open Circuit Detection Level value range	0	A	0	20	0.1
Trailer_Tail_Lamp_High_Current	3185	Trailer Tail Lamp High Current Detection Level value range	20	A	0	20	0.1
Trailer_Tail_Lamp_Low_Current	3186	Trailer Tail Lamp Low Current Detection Level value range	0	A	0	20	0.1
Trailer_Tail_Lamp_OC_Current	3187	Trailer Tail Lamp Open Circuit Detection Level value range	0	A	0	20	0.1

Parameter Definitions:

- **Trailer_Left_Turn_Lamp_OC_Current** – This parameter sets the minimum fuse level for the open circuit of the Trailer Left Turn Lamp. If the current draw is below this value, a fault will be set.
- **Trailer_Left_Turn_Lamp_Low_Current** – This parameter sets the minimum fuse level for normal operation of the Trailer Left Turn Lamp. If the current draw exceeds this value, the circuit will open.
- **Trailer_Left_Turn_Lamp_High_Current** – This parameter sets the maximum fuse level for normal operation of the Trailer Left Turn Lamp. If the current draw exceeds this value, the circuit will open.
- **Trailer_Right_Turn_Lamp_High_Current** – This parameter sets the maximum fuse level for normal operation of the Trailer Right Turn Lamp. If the current draw exceeds this value, the circuit will open.
- **Trailer_Right_Turn_Lamp_Low_Current** – This parameter sets the minimum fuse level for normal operation of the Trailer Right Turn Lamp. If the current draw exceeds this value, the circuit will open.
- **Trailer_Right_Turn_Lamp_OC_Current** – This parameter sets the minimum fuse level for the open circuit of the Trailer Right Turn Lamp. If the current draw is below this value, a fault will be set.
- **Trailer_Marker_Lamp_High_Current** – This parameter sets the maximum fuse level for normal operation of the Trailer Marker Lamp. If the current draw exceeds this value, the circuit will open.
- **Trailer_Marker_Lamp_Low_Current** – This parameter sets the minimum fuse level for normal operation of the Trailer Marker Lamp. If the current draw exceeds this value, the circuit will open.
- **Trailer_Marker_Lamp_OC_Current** – This parameter sets the minimum fuse level for the open circuit of the Trailer Marker Lamp. If the current draw is below this value, a fault will be set.
- **Trailer_Tail_Lamp_High_Current** – This parameter sets the maximum fuse level for normal operation of the Trailer Tail Lamp. If the current draw exceeds this value, the circuit will open.

- **Trailer_Tail_Lamp_Low_Current** – This parameter sets the minimum fuse level for normal operation of the Trailer Tail Lamp. If the current draw exceeds this value, the circuit will open.
- **Trailer_Tail_Lamp_OC_Current** – This parameter sets the minimum fuse level for the open circuit of the Trailer Tail Lamp. If the current draw is below this value, a fault will be set.

How to Test This Feature:
1. Make proper trailer connections.
2. Turn on headlights.
3. Verify that the brown taillight wire and the black identification light wire have battery voltage levels present.
4. Turn off headlights.
5. Press the footbrake.
6. Verify that the red brake wire has battery voltage levels present.
7. Release the footbrake.
8. Turn on the left turn signal.
9. Verify that the yellow left turn signal wire is cycling between battery voltage and GND.
10. Turn off left turn signal.
11. Turn on the right turn signal.
12. Verify that the light green right turn signal wire is cycling between battery voltage and GND.
13. Turn off right turn signal.
14. Activate trailer brakes with the trailer brake controller.
15. Verify that the dark blue electric trailer brake wire has variable voltage levels present commensurate with the position of the brake controller lever.
16. Verify that trailer brakes are functioning correctly by calibrating the electric trailer brake controller according to the manufacturer's instructions.

Note: This feature uses body controller-based software controls which can be diagnosed with the Navistar® Diamond Logic® Builder software (see local dealer if not owned).

References:
Refer to the applicable International® Circuit Diagrams and Service Manuals

16.8. 08HAT: BODY BUILDER WIRING Includes Wires Installed through the Dash Panel and End in Engine Compartment, In Cab Wire Ends Will Have body controller Input Terminals, Engine Compartment Wire Ends will have Sealed Connectors.

Feature Applicability to Vehicle Platforms:

- Heavy Vocational (HV)
- Medium Vocational (MV)
- Heavy Extreme (HX) 2021 and Newer

Extended Description: Feature code 08HAT provides 8 wires from the cab through the 76-way pass-through connector located on the left (driver's) side of the dash extending into the engine compartment for ease of connecting accessory equipment in the engine compartment to the Body Controller. This feature provides these circuits from the Body Controller without compromising the cab seal or having to drill additional holes in the cab. The wires are terminated in a sealed connector in the engine compartment and the other ends have Body Controller input pin terminations inside the cab compartment. This will significantly reduce labor and material costs for the bodybuilder.

System Block Diagram:

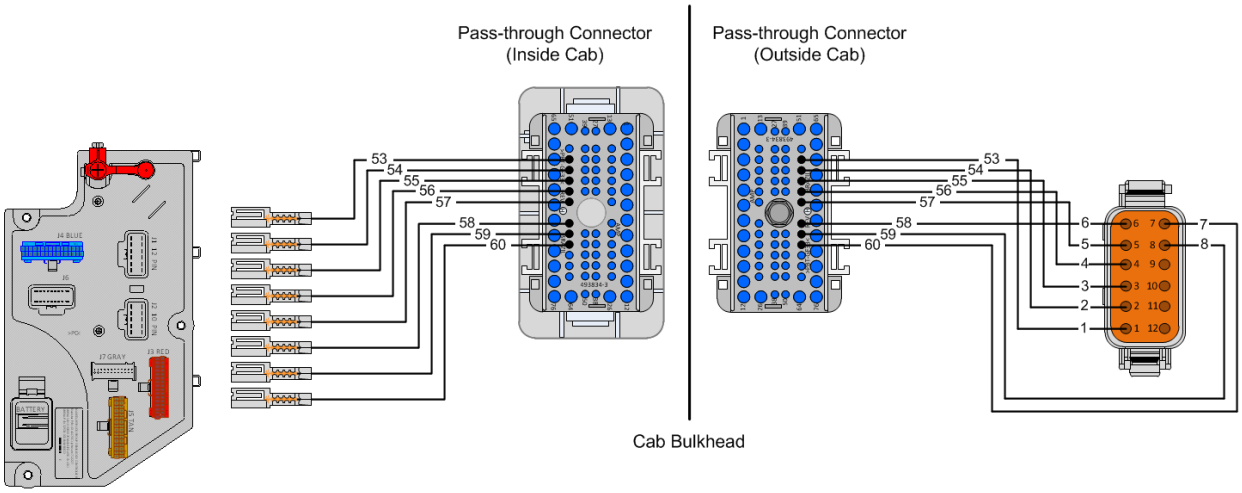

Parts Associated with This Feature:

PART NUMBER	DESCRIPTION
12-WAY ENGINE COMPARTMENT CONNECTOR (CHASSIS HARNESS)	
3601924C1	12-WAY CONNECTOR BODY (MALE)
3601925C1	12-WAY CONNECTOR LOCK
1680205C1	WIRE TERMINAL 18-GAUGE
12-WAY ENGINE COMPARTMENT CONNECTOR (BODY EQUIPMENT HARNESS)	
1689499C1	12-WAY CONNECTOR BODY (FEMALE)
1689501C1	12-WAY CONNECTOR LOCK

1680206C1	WIRE TERMINAL 18-GAUGE
76-WAY CONNECTOR (THERMAL PROTECTION BARRIER PASS THROUGH)	
3574285C1	76-WAY CONNECTOR WIRE TERMINAL FEMALE 14-GUAGE
3574288C1	76-WAY CONNECTOR WIRE TERMINAL FEMALE 16-GUAGE
2003343C1	76-WAY CONNECTOR WIRE TERMINAL FEMALE 18-GUAGE
3549416C1	76-WAY CONNECTOR WIRE TERMINAL MALE 14-GUAGE
3549417C1	76-WAY CONNECTOR WIRE TERMINAL MALE 16-GUAGE
35494118C1	76-WAY CONNECTOR WIRE TERMINAL MALE 18-GUAGE

Parts Associated with Body Builder Pass-through Harness

References:

Refer to the applicable International® Circuit Diagrams and Service Manuals

16.9. 08HAU: BODY BUILDER WIRING INSIDE CAB; Includes Sealed Connectors for Tail/Amber, Turn/Marker/Backup/Accessory, Power/Ground, and Stop/Turn.

Feature Applicability to Vehicle Platforms:

- Heavy Vocational (HV)
- Medium Vocational (MV)
- Heavy Extreme (HX) 2021 and Newer

Extended Description: This feature includes one 7-way and one 3-way sealed connector inside of the cab. The 7-way connector includes taillight, clearance, backup, stop/turn, accessory, and ground circuits for the body builder to connect to in place of wiring into the chassis equipped end of frame light circuits. The 3-way connector includes circuits for separate stop and turn lights if needed.

System Block Diagram:

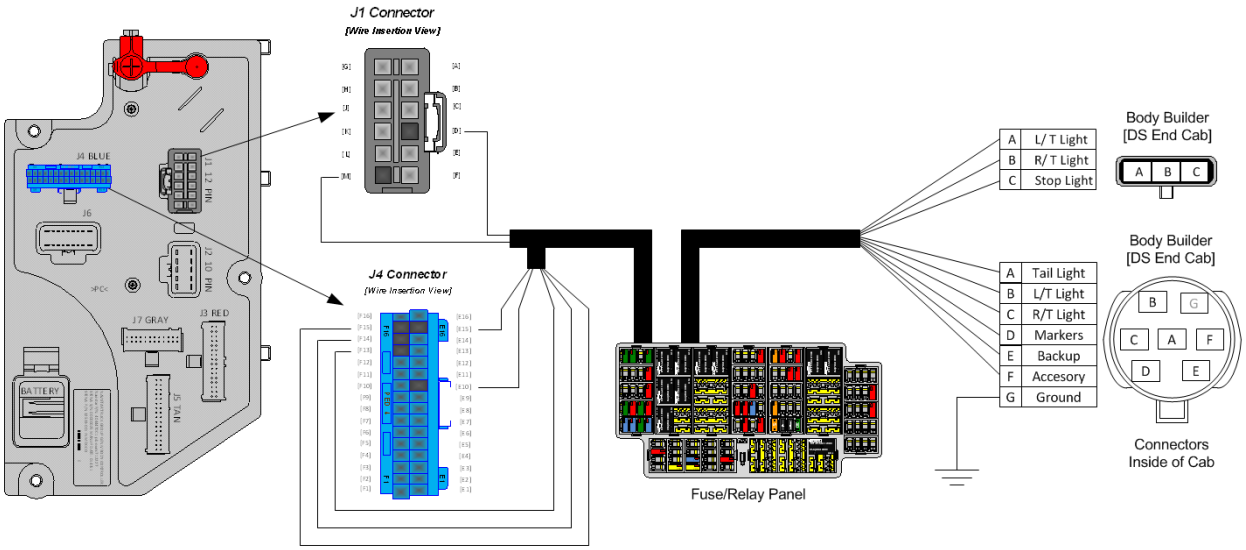

Body Controller Software Feature Codes:

- 597054 – BCM PROG, TRAILER LIGHTING

Body Controller Software Feature Code Parameters:

Parameter	ID	Description	Default	Units	Min	Max	Step
Trailer_Left_Turn_Lamp_OC_Current	3175	Trailer Left Lamp Open Circuit Detection Level value range	0	A	0	20	0.1
Trailer_Left_Turn_Lamp_Low_Current	3177	Trailer Left Lamp Low Current Detection Level value range	0	A	0	20	0.1
Trailer_Left_Turn_Lamp_High_Current	3178	Trailer Left Lamp High Current Detection Level value range	15	A	0	20	0.1

Trailer_Right_Turn_Lamp_High_Current	3179	Trailer Right Lamp High Current Detection Level value range	15	A	0	20	0.1
Trailer_Right_Turn_Lamp_Low_Current	3180	Trailer Left Lamp Low Current Detection Level value range	0	A	0	20	0.1
Trailer_Right_Turn_Lamp_OC_Current	3181	Trailer Left Lamp Open Circuit Detection Level value range	0	A	0	20	0.1
Trailer_Marker_Lamp_High_Current	3182	Trailer Marker Lamp High Current Detection Level value range	20	A	0	20	0.1
Trailer_Marker_Lamp_Low_Current	3183	Trailer Marker Lamp Low Current Detection Level value range	0	A	0	20	0.1
Trailer_Marker_Lamp_OC_Current	3184	Trailer Marker Lamp Open Circuit Detection Level value range	0	A	0	20	0.1
Trailer_Tail_Lamp_High_Current	3185	Trailer Tail Lamp High Current Detection Level value range	20	A	0	20	0.1
Trailer_Tail_Lamp_Low_Current	3186	Trailer Tail Lamp Low Current Detection Level value range	0	A	0	20	0.1
Trailer_Tail_Lamp_OC_Current	3187	Trailer Tail Lamp Open Circuit Detection Level value range	0	A	0	20	0.1

Parameter Definitions:

- **Trailer_Left_Turn_Lamp_OC_Current** – This parameter sets the minimum fuse level for the open circuit of the Trailer Left Turn Lamp. If the current draw is below this value, a fault will be set.
- **Trailer_Left_Turn_Lamp_Low_Current** – This parameter sets the minimum fuse level for normal operation of the Trailer Left Turn Lamp. If the current draw exceeds this value, the circuit will open.
- **Trailer_Left_Turn_Lamp_High_Current** – This parameter sets the maximum fuse level for normal operation of the Trailer Left Turn Lamp. If the current draw exceeds this value, the circuit will open.
- **Trailer_Right_Turn_Lamp_High_Current** – This parameter sets the maximum fuse level for normal operation of the Trailer Right Turn Lamp. If the current draw exceeds this value, the circuit will open.
- **Trailer_Right_Turn_Lamp_Low_Current** – This parameter sets the minimum fuse level for normal operation of the Trailer Right Turn Lamp. If the current draw exceeds this value, the circuit will open.
- **Trailer_Right_Turn_Lamp_OC_Current** – This parameter sets the minimum fuse level for the open circuit of the Trailer Right Turn Lamp. If the current draw is below this value, a fault will be set.
- **Trailer_Marker_Lamp_High_Current** – This parameter sets the maximum fuse level for normal operation of the Trailer Marker Lamp. If the current draw exceeds this value, the circuit will open.
- **Trailer_Marker_Lamp_Low_Current** – This parameter sets the minimum fuse level for normal operation of the Trailer Marker Lamp. If the current draw exceeds this value, the circuit will open.

- **Trailer_Marker_Lamp_OC_Current** – This parameter sets the minimum fuse level for the open circuit of the Trailer Marker Lamp. If the current draw is below this value, a fault will be set.
- **Trailer_Tail_Lamp_High_Current** – This parameter sets the maximum fuse level for normal operation of the Trailer Tail Lamp. If the current draw exceeds this value, the circuit will open.
- **Trailer_Tail_Lamp_Low_Current** – This parameter sets the minimum fuse level for normal operation of the Trailer Tail Lamp. If the current draw exceeds this value, the circuit will open.
- **Trailer_Tail_Lamp_OC_Current** – This parameter sets the minimum fuse level for the open circuit of the Trailer Tail Lamp. If the current draw is below this value, a fault will be set.

Parts Associated with This Feature:

PART NUMBER	DESCRIPTION
7-WAY BODY LIGHTING CONNECTOR VEHICLE HARNESS	
2039311C91	7–WAY CONNECTOR
2039342C1	7-WAYCONNECTOR LOCK
2039344C1	12-GAUGE TERMINAL
3535486C1	14-GAUGE TERMINAL
2039343C1	16-GAUGE TERMINAL
0589390C1	12-GAUGE TERMINAL SEAL
0589391C1	14-GAUGE TERMINAL SEAL
1652325C1	16-GAUGE TERMINAL SEAL
7-WAY BODY LIGHTING MATING CONNECTOR FOR BODY BUILDER HARNESS	
2039312C91	7-WAY CONNECTOR (SUPPLIED BY CUSTOMER)
2039342C1	7-WAY CONNECTOR LOCK
1687848C1	12-GAUGE TERMINAL
2033912C1	14-GAUGE TERMINAL
2033911C1	16-GAUGE TERMINAL
0589390C1	12-GAUGE TERMINAL SEAL
0589391C1	14-GAUGE TERMINAL SEAL
1652325C1	16-GAUGE TERMINAL SEAL
3-WAY BODY LIGHTING CONNECTOR VEHICLE HARNESS	
1686834C1	3-WAY CONNECTOR
1664408C1	3-WAY CONNECTOR LOCK
2033816C1	14-GAUGE TERMINAL
2033819C1	16-GAUGE TERMINAL
589391C1	14-GAUGE TERMINAL SEAL
1652325C1	16-GAUGE TERMINAL SEAL
3-WAY BODY LIGHTING MATING CONNECTOR FOR 4460 BODY BUILDER HARNESS	
3553961C1	3-WAY CONNECTOR (SUPPLIED BY CUSTOMER)

3554019C1	3-WAY CONNECTOR LOCK
2033912C1	14-GAUGE TERMINAL
2033911C1	16-GAUGE TERMINAL
0589391C1	14-GAUGE TERMINAL SEAL
1652325C1	16-GAUGE TERMINAL SEAL

Parts Associated with Body Builder Wiring Feature

How to Test This Feature:
When additional lights are added, test those lights for functionality and test the connection point for battery voltage.

For Combined Stop/Tail/Turn:
1. Turn on vehicle headlights.
2. Verify that the taillight circuit, Cavity A of 7-way socket with brown 14-gauge wire, has battery voltage
levels present.
3. Verify that the marker light circuit, Cavity D of 7-way socket with brown 14-gauge wire, has battery voltage levels present
4. Turn OFF vehicle headlights.
5. Turn on left turn signal in vehicle.
6. Verify that left turn/stop circuit, Cavity B of 7-way socket with yellow 16-gauge wire, is cycling between
battery voltage and GND.
7. Turn off vehicle left turn signal.
8. Turn on right turn signal in vehicle.
9. Verify that right turn/stop circuit, Cavity C of 7-way socket with light green 16-gauge wire, is cycling between battery voltage and GND.
10. Turn off vehicle right turn signal.
11. Put the vehicle in reverse.
12. Verify that the body backup lights are working correctly.
13. Verify that the backup light circuit, Cavity E of 7-way socket with light blue 16-gauge wire, has battery voltage levels present.
14. Take the vehicle out of reverse.
15. Turn key to accessory or IGN position.
16. Verify that the accessory circuit, Cavity F of 7-way socket with light blue 14-gauge wire, has battery voltage levels present.
17. Press the vehicle brake pedal.
18. Verify that the brake lights are functioning correctly.
19. Verify that the left turn/stop circuit, Cavity B of 7-way socket with yellow 16-gauge wire, AND the right
turn/stop circuit, Cavity C of 7-way socket with light green 16-gauge wire have battery voltage levels present.
20. Release brake pedal.

For Separate Stop and Turn:

1. Turn off vehicle headlights.
2. Turn on left turn signal in vehicle.
3. Verify that left turn circuit, Cavity A of 3-way socket with yellow 16-gauge wire, is cycling between battery voltage and GND.
4. Turn off vehicle left turn signal.
5. Turn on right turn signal in vehicle.
6. Verify that right turn circuit, Cavity B of 3-way socket with light green 16-gauge wire, is cycling between battery voltage and GND.
7. Turn off vehicle right turn signal.
8. Press the vehicle brake pedal.
9. Verify that the stop circuit, Cavity C of 3-way socket with Red 14-gauge wire, has battery voltage levels present
10. Release brake pedal.

Note: This feature uses body controller-based software controls which can be diagnosed with the Navistar® Diamond Logic® Builder software (see local dealer if not owned).

References:
Refer to the applicable International® Circuit Diagrams and Service Manuals

16.10. 08HAV: SPECIAL WIRING HARNESS, BODY with Additional 20" Length to Rear of Chassis Harness, Coiled at End of Frame.

Note: Requires electric trailer brake/lights 08HAH

Feature Applicability to Vehicle Platforms:

- Heavy Vocational (HV)

Extended Description: Feature code 08HAV provides an additional 20" of length to the rear chassis harness, coiled at end of the frame.

References:
Refer to the applicable International® Circuit Diagrams and Service Manuals.

16.11. 08NAA: TAILLIGHT WIRING MODIFIED Includes: Wiring for Standard Left & Right Tail Lights; Separate 8.0' of Extra Cable Wiring for Left & Right Body Mounted Tail Lights.

Feature Applicability to Vehicle Platforms:

- Heavy Vocational (HV)
- Medium Vocational (MV)

Extended Description: Feature code 08NAA provides eight additional feet of stop, turn, and taillight wiring to relocate the stop/turn lights provided with the vehicle. This feature is usually ordered for beverage body and other drop-frame vehicles that need the extra wiring length to extend the taillight wiring to body mounted locations.

System Block Diagram:

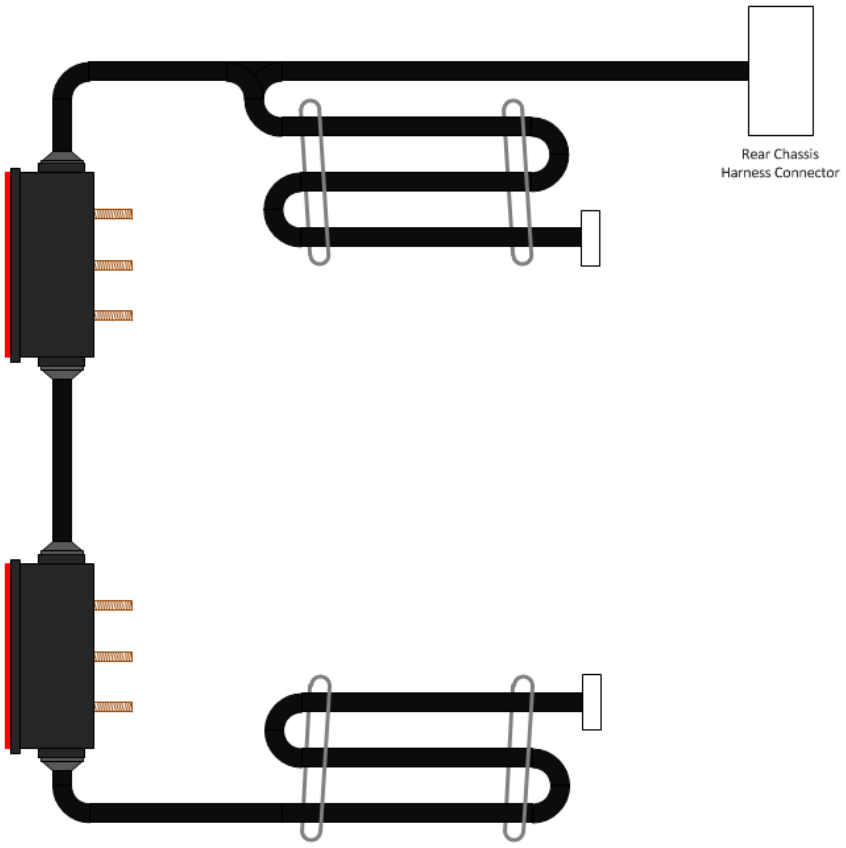

Parts Associated with This Feature:

PART NUMBER	DESCRIPTION
LEFT & RIGHT TAILLIGHT CONNECTORS	
1677851C1	5-WAY CONNECTOR (8008F)
1677914C1	5-WAY CONNECTOR LOCK
1687848C1	WIRE TERMINAL 10-GAUGE
2033912C1	WIRE TERMINAL 12-GAUGE
2033911C1	WIRE TERMINAL 14-GAUGE
0589390C1	WIRE TERMINAL SEAL 10-GAUGE
0589391C1	WIRE TERMINAL SEAL 12-GAUGE
1652325C1	WIRE TERMINAL SEAL 14-GAUGE

Parts Associated with Tail Lighting Feature

Note: This feature uses body controller-based software controls which can be diagnosed with The International® Diamond Logic® Builder software (see local dealer if not owned).

References:

Refer to the applicable International® Circuit Diagrams and Service Manuals.

16.12. 08THG: AUX. TRAILER SOCKET 7-Way; With Battery Fed Circuit to Center Pin, with 25-AMP Fuse and Relay Controlled by Switch with Indicator Light on Instrument Panel (IP) Fed from Hot Battery Feed (Not Wired Thru Key Switch).

Feature Applicability to Vehicle Platforms:

- Heavy Vocational (HV)
- Line Haul Transport (LT)
- Medium Vocational (MV)

Extended Description: This feature provides wiring and a connector for the customer to connect auxiliary trailer lighting circuits to the vehicle. This feature includes a 7-way auxiliary trailer socket mounted at the back of cab (BOC) that includes a 25-Amp battery fused relay output controlled by a switch for the Center Pin power of the auxiliary trailer socket. This feature includes wiring for separate stop and taillight circuits. This feature is an option that can be ordered with tractor air brakes (4092) and trailer socket 08TMG.

System Block Diagram:

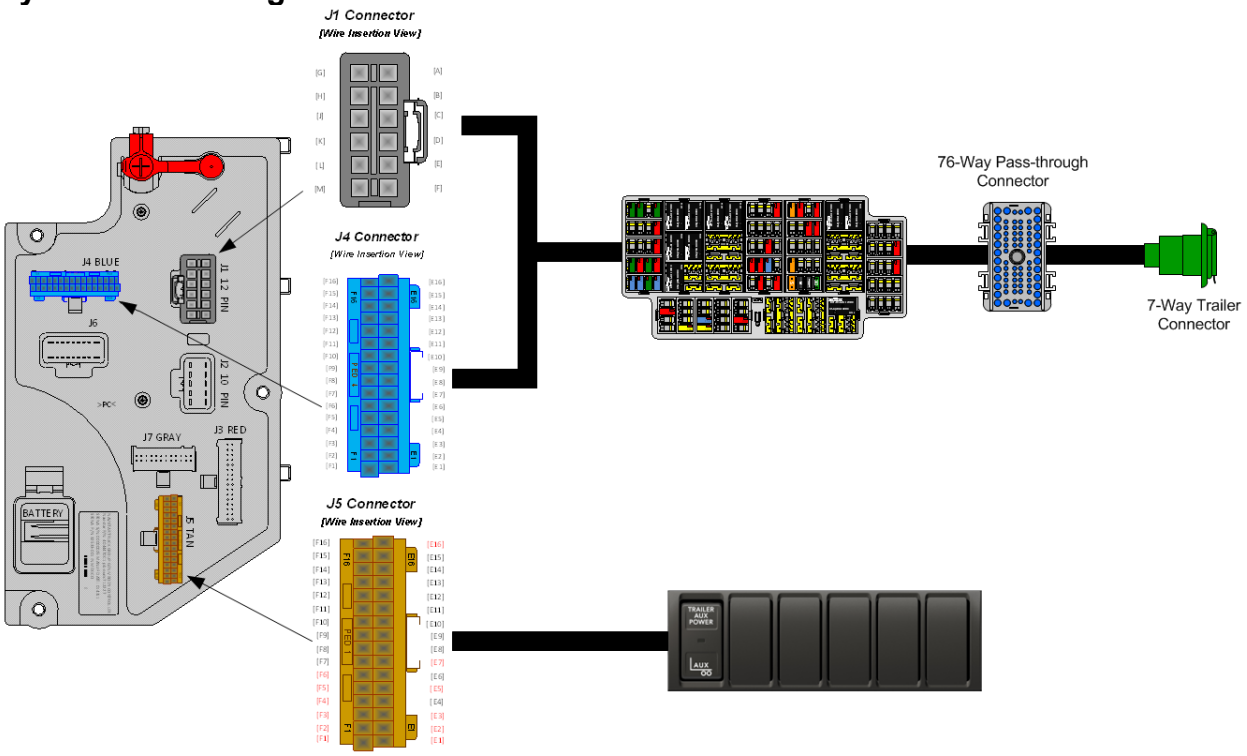

Body Controller Software Feature Codes:

- 597142 - BCM PROG, **TRAILER AUX CIRCUIT BATT POWER**
- 597143 - BCM PROG, **REMOTE TRAILER AUX CIRCUIT**
- Mutually exclusive

How to Test This Feature:
Turn on Aux Trailer Switch.
2. Verify that the taillight circuit, Cavity A of 7-way Aux socket with brown 14-gauge wire, has battery voltage levels present.
3. Verify that the marker light circuit, Cavity D of 7-way Aux socket with brown 14-gauge wire, has battery voltage levels present
4. Turn OFF Aux Trailer Switch.
5. Turn on left turn signal in vehicle.
6. Verify that left turn/stop circuit, Cavity B of 7-way Aux socket with yellow 16-gauge wire, is cycling between battery voltage and GND.
7. Turn off vehicle left turn signal.
8. Turn on right turn signal in vehicle.
9. Verify that right turn/stop circuit, Cavity C of 7-way Aux socket with light green 16-gauge wire, is cycling between battery voltage and GND.
10. Turn off vehicle right turn signal.
11. Put the vehicle in reverse.
12. Verify that the body backup lights are working correctly.
13. Verify that the backup light circuit, Cavity E of 7-way Aux socket with light blue 16-gauge wire, has battery voltage levels present.
14. Take the vehicle out of reverse.
15. Turn key to accessory or IGN position.
16. Verify that the accessory circuit, Cavity F of 7-way Aux socket with light blue 14-gauge wire, has battery voltage levels present.
17. Press the vehicle brake pedal.
18. Verify that the brake lights are functioning correctly.
19. Verify that the left turn/stop circuit, Cavity B of 7-way Aux socket with yellow 16-gauge wire, AND the right turn/stop circuit, Cavity C of 7-way Aux socket with light green 16-gauge wire have battery voltage levels present.
20. Release brake pedal.

Note: This feature uses body controller-based software controls which can be diagnosed with The International® Diamond Logic® Builder software (see local dealer if not owned).

References:
Refer to the applicable International® Circuit Diagrams and Service Manuals.

16.13. 08THH: AUX. TRAILER SOCKET 7-Way; With Battery Fed Circuit to Center Pin, with 25 AMP Fuse and Relay Controlled by Switch with Indicator Light Controlled by Accessory Side of Key Switch, Switch Mounted on IP.

Feature Applicability to Vehicle Platforms:

- Heavy Vocational (HV)
- Line Haul Transport (LT)
- Regional Haul (RH)
- Heavy Extreme (HX) 2021 and Newer

Extended Description: This feature provides wiring and a connector for the customer to connect auxiliary trailer lighting circuits to the vehicle. This feature includes a 7-way auxiliary trailer socket mounted at the back of cab (BOC) that includes a 25-Amp battery fused relay output controlled by an Accessory controlled switch for the Center Pin power of the auxiliary trailer socket. This feature includes wiring for separate stop and taillight circuits. This feature is an option that can be ordered with tractor air brakes (4092) and trailer socket 08TMG.

System Block Diagram:

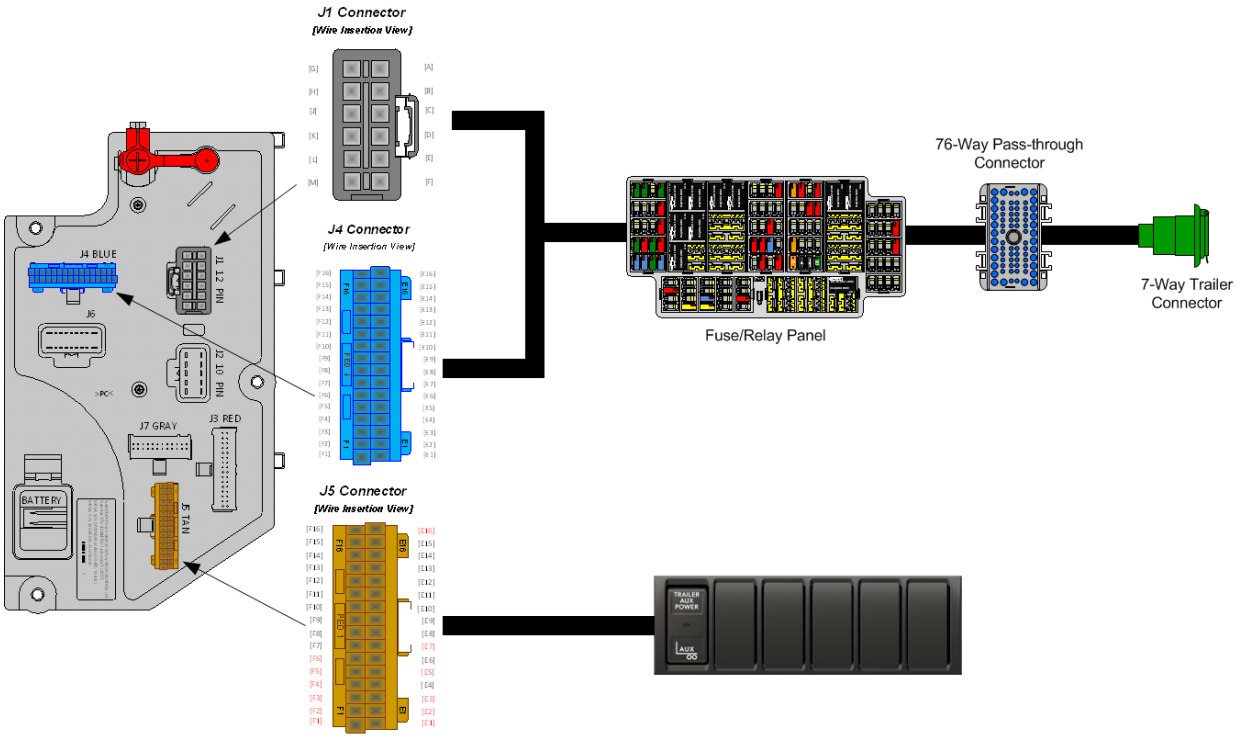

Body Controller Software Feature Codes:

- 597141 - BCM PROG, **TRAILER AUX CIRCUIT ACC POWER**

Note/s About Possible Software Feature Conflicts:

- Software feature code 597141 will conflict with software feature codes 597142 and 597143 - Only one of these three software feature codes can be used in a given vehicle configuration.

How to Test This Feature:
Turn on Aux Trailer Switch.
2. Verify that the taillight circuit, Cavity A of 7-way Aux socket with brown 14-gauge wire, has battery voltage levels present.
3. Verify that the marker light circuit, Cavity D of 7-way Aux socket with brown 14-gauge wire, has battery voltage levels present
4. Turn OFF Aux Trailer Switch.
5. Turn on left turn signal in vehicle.
6. Verify that left turn/stop circuit, Cavity B of 7-way Aux socket with yellow 16-gauge wire, is cycling between battery voltage and GND.
7. Turn off vehicle left turn signal.
8. Turn on right turn signal in vehicle.
9. Verify that right turn/stop circuit, Cavity C of 7-way Aux socket with light green 16-gauge wire, is cycling between battery voltage and GND.
10. Turn off vehicle right turn signal.
11. Put the vehicle in reverse.
12. Verify that the body backup lights are working correctly.
13. Verify that the backup light circuit, Cavity E of 7-way Aux socket with light blue 16-gauge wire, has battery voltage levels present.
14. Take the vehicle out of reverse.
15. Turn key to accessory or IGN position.
16. Verify that the accessory circuit, Cavity F of 7-way Aux socket with light blue 14-gauge wire, has battery voltage levels present.
17. Press the vehicle brake pedal.
18. Verify that the brake lights are functioning correctly.
19. Verify that the left turn/stop circuit, Cavity B of 7-way Aux socket with yellow 16-gauge wire, AND the right turn/stop circuit, Cavity C of 7-way Aux socket with light green 16-gauge wire have battery voltage levels present.
20. Release brake pedal.

Note: This feature uses body controller-based software controls which can be diagnosed with the Navistar® Diamond Logic® Builder software (see local dealer if not owned).

References:
Refer to the applicable International® Circuit Diagrams and Service Manuals

16.14. 08THU: TRAILER SOCKET 7-Way; with Battery Fed Circuit to Center Pin, with 30 Amp Fuse and Relay Controlled by Switch with Indicator Light on Instrument Panel Fed From Hot Battery Feed, When Parking Brake Is Applied, Not Wired Thru Key Switch.

Feature Applicability to Vehicle Platforms:

- Line Haul Transport (LT)
- Regional Haul (RH)
- Heavy Extreme (HX) 2021 and Newer

Extended Description: Provides power to the center pin of the standard 7-way trailer connector when the parking brake is applied and the dash mounted switch is engaged. The center pin provides power to the trailer ABS system when the ignition is on as a standard function. When coupled with this feature this output can also be used to power other accessories on the trailer with less than 30 amps draw, like interior lights or fans.

System Block Diagram:

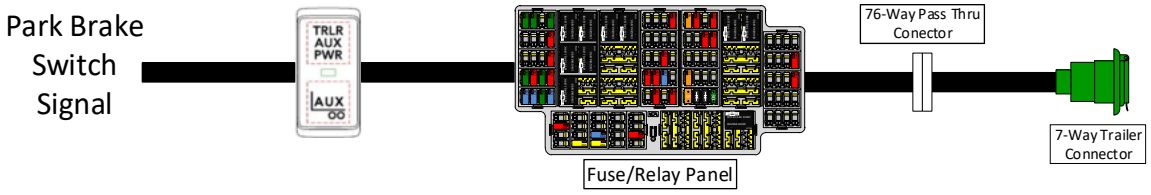

How to Test This Feature:

1. Set the park brake.
2. Turn OFF the key switch
3. Turn ON Aux Trailer Switch
4. Verify that the center pin of the trailer connector has battery voltage present and the switch indicator turns on.
5. Turn OFF Aux Trailer Switch.
6. Verify that the center pin of the trailer connector does not have power and the switch indicator goes off.

References:

Refer to the applicable International® Circuit Diagrams and Service Manuals.

16.15. 08TKK: TRAILER AUXILIARY FEED CIRCUIT for Electric Trailer Brake Accommodation/Air Trailer ABS; With 30-Amp Fuse and Relay, Controlled by Ignition Switch.

Feature Applicability to Vehicle Platforms:

- Heavy Vocational (HV)
- Medium Vocational (MV)
- Heavy Extreme (HX) 2021 and Newer

Extended Description: This feature, when used with one of the optional electric trailer brake accommodation features, enables a truck to be wired to accommodate multiple trailer sockets that will drive the electrical loads of either an air brake type trailer or a trailer with electric brakes. The 30-Amp feed may be used for air brake Trailer ABS Power or as a charging circuit for electric trailer brake batteries.

Note: Trailer sockets are not installed at the factory and must be installed by the body Builder.

System Block Diagram:

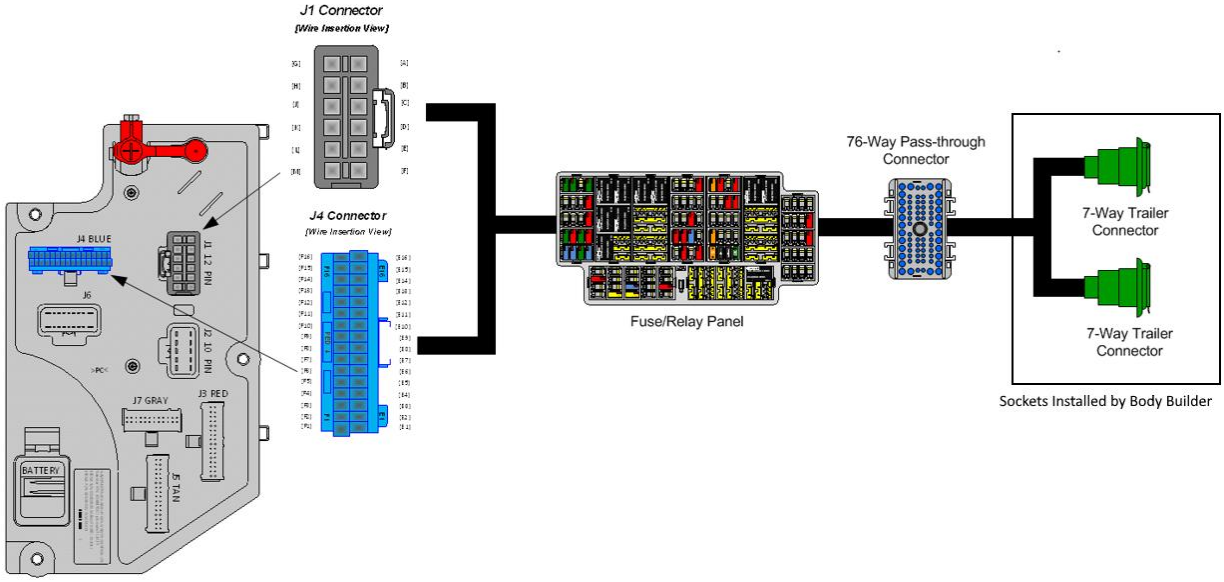

How to Test This Feature:

Note: This feature uses body controller-based software controls which can be diagnosed with the Navistar® Diamond Logic® Builder software (see local dealer if not owned).

References:
Refer to the applicable International® Circuit Diagrams and Service Manuals

16.16. 08TME: TRAILER CONNECTION SOCKET 7-Way; Mounted at EOF, Wired for Turn Signals Independent of Stop, Compatible with Trailers That Have Amber or Side Lamps.

Feature Applicability to Vehicle Platforms:

- Heavy Vocational (HV)
- Line Haul Transport (LT)
- Medium Vocational (MV)
- Regional Haul (RH)
- Heavy Extreme (HX) 2021 and Newer

Extended Description: This feature is used to connect trailer lighting circuits to the vehicle. This option is for providing separate stop and turn signals and is located at the EOF. The 7-way socket provides an IGN-controlled fused 30-AMP center pin for trailer Antilock Brake Systems (ABS). Feature 08TME is designed for trailers with separate stop and turn lamps. With all trailer connection features, the socket is a standard SAE recommended socket used in the trucking industry. The circuit arrangement in the socket is also the same as SAE recommendation.

System Block Diagram:

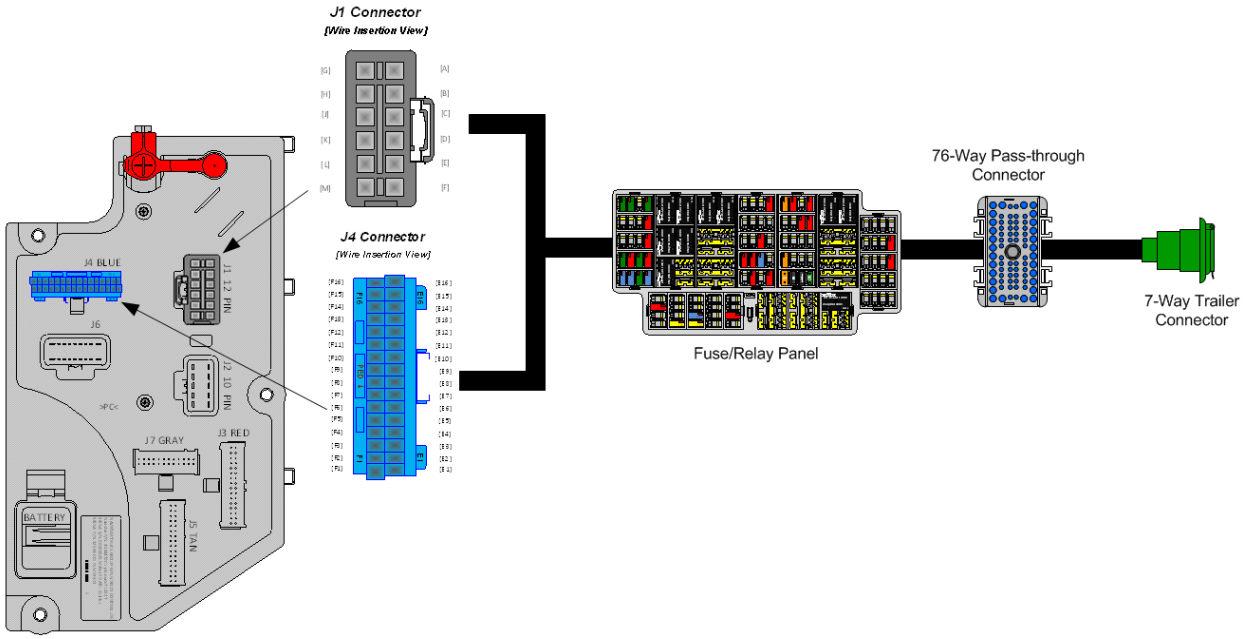

Body Controller Software Feature Codes:

- 597054 – BCM PROG, TRAILER LIGHTING

Body Controller Software Feature Code Parameters:

Parameter	ID	Description	Default	Units	Min	Max	Step
Trailer_Left_Turn_Lamp_OC_Current	3175	Trailer Left Lamp Open Circuit Detection Level value range	0	A	0	20	0.1
Trailer_Left_Turn_Lamp_Low_Current	3177	Trailer Left Lamp Low Current Detection Level value range	0	A	0	20	0.1
Trailer_Left_Turn_Lamp_High_Current	3178	Trailer Left Lamp High Current Detection Level value range	15	A	0	20	0.1
Trailer_Right_Turn_Lamp_High_Current	3179	Trailer Right Lamp High Current Detection Level value range	15	A	0	20	0.1
Trailer_Right_Turn_Lamp_Low_Current	3180	Trailer Left Lamp Low Current Detection Level value range	0	A	0	20	0.1
Trailer_Right_Turn_Lamp_OC_Current	3181	Trailer Left Lamp Open Circuit Detection Level value range	0	A	0	20	0.1
Trailer_Marker_Lamp_High_Current	3182	Trailer Marker Lamp High Current Detection Level value range	20	A	0	20	0.1
Trailer_Marker_Lamp_Low_Current	3183	Trailer Marker Lamp Low Current Detection Level value range	0	A	0	20	0.1
Trailer_Marker_Lamp_OC_Current	3184	Trailer Marker Lamp Open Circuit Detection Level value range	0	A	0	20	0.1
Trailer_Tail_Lamp_High_Current	3185	Trailer Tail Lamp High Current Detection Level value range	20	A	0	20	0.1
Trailer_Tail_Lamp_Low_Current	3186	Trailer Tail Lamp Low Current Detection Level value range	0	A	0	20	0.1
Trailer_Tail_Lamp_OC_Current	3187	Trailer Tail Lamp Open Circuit Detection Level value range	0	A	0	20	0.1

Parameter Definitions:

- **Trailer_Left_Turn_Lamp_OC_Current** – This parameter sets the minimum fuse level for the open circuit of the Trailer Left Turn Lamp. If the current draw is below this value, a fault will be set.
- **Trailer_Left_Turn_Lamp_Low_Current** – This parameter sets the minimum fuse level for normal operation of the Trailer Left Turn Lamp. If the current draw exceeds this value, the circuit will open.
- **Trailer_Left_Turn_Lamp_High_Current** – This parameter sets the maximum fuse level for normal operation of the Trailer Left Turn Lamp. If the current draw exceeds this value, the circuit will open.
- **Trailer_Right_Turn_Lamp_High_Current** – This parameter sets the maximum fuse level for normal operation of the Trailer Right Turn Lamp. If the current draw exceeds this value, the circuit will open.
- **Trailer_Right_Turn_Lamp_Low_Current** – This parameter sets the minimum fuse level for normal operation of the Trailer Right Turn Lamp. If the current draw exceeds this value, the circuit will open.

- **Trailer_Right_Turn_Lamp_OC_Current** – This parameter sets the minimum fuse level for the open circuit of the Trailer Right Turn Lamp. If the current draw is below this value, a fault will be set.
- **Trailer_Marker_Lamp_High_Current** – This parameter sets the maximum fuse level for normal operation of the Trailer Marker Lamp. If the current draw exceeds this value, the circuit will open.
- **Trailer_Marker_Lamp_Low_Current** – This parameter sets the minimum fuse level for normal operation of the Trailer Marker Lamp. If the current draw exceeds this value, the circuit will open.
- **Trailer_Marker_Lamp_OC_Current** – This parameter sets the minimum fuse level for the open circuit of the Trailer Marker Lamp. If the current draw is below this value, a fault will be set.
- **Trailer_Tail_Lamp_High_Current** – This parameter sets the maximum fuse level for normal operation of the Trailer Tail Lamp. If the current draw exceeds this value, the circuit will open.
- **Trailer_Tail_Lamp_Low_Current** – This parameter sets the minimum fuse level for normal operation of the Trailer Tail Lamp. If the current draw exceeds this value, the circuit will open.
- **Trailer_Tail_Lamp_OC_Current** – This parameter sets the minimum fuse level for the open circuit of the Trailer Tail Lamp. If the current draw is below this value, a fault will be set.

How to Add This Feature:
Adding these features after the vehicle is built is not an easy task. It is encouraged that the vehicle be ordered with the desired feature. The installation requires additional fuses and relays be added to the Power Distribution Center (PDC) in the cab. Be sure to label the function of the added relays and fuses to the decal on the underside of the PDC cover. The loose circuits will be numbered and correspond to the circuits outlined in the circuit diagram manual.

How to Test This Feature:
1. Turn on vehicle headlights.
2. Verify that the tail lights circuit (brown wire, top left cavity on trailer socket) has battery voltage levels
present.
3. Verify that trailer marker circuit (black wire, top right cavity on trailer socket) has battery voltage levels
present.
4. Turn off vehicle headlights.
5. Turn on vehicle right turn lamp.
6. Verify that the trailer right turn lamp circuit (green wire, bottom left cavity on trailer socket) is cycling between battery voltage and GND.
7. Turn off vehicle right turn lamp.
8. Turn on vehicle left turn lamp.

9. Verify that the trailer left turn lamp circuit (yellow wire, bottom right cavity on trailer socket) is cycling
between battery voltage and GND.
10. Turn off vehicle left turn lamp.
11. Press the vehicle brake pedal.
12. Verify that the trailer brake light circuit (red wire, bottom center cavity on trailer socket) has battery voltage levels present when the IGN key is in the accessory position.
13. Verify that trailer brake circuit (Blue wire, center cavity on trailer socket) has battery voltage levels present.
14. Release brake pedal.

Note: This feature uses body controller-based software controls which can be diagnosed with the Navistar® Diamond Logic® Builder software (see local dealer if not owned).

References:
Refer to the applicable International® Circuit Diagrams and Service Manuals

16.17. 08TMG: TRAILER CONNECTION SOCKET 7-Way; Mounted at EOF, Wired for Turn Signals Combines with Stop, Compatible with Trailers That Use Combined Stop, Tail, Turn Lamps.

Feature Applicability to Vehicle Platforms:

- Heavy Vocational (HV)
- Medium Vocational (MV)
- Heavy Extreme (HX) 2021 and Newer

Extended Description: This feature is used to connect trailer lighting circuits to the vehicle. This option is for providing combined stop and turn signals and is located at the EOF. The 7-way socket provides an IGN-controlled fused 30-AMP center pin for trailer Antilock Brake Systems (ABS). Feature 08TMG is designed for trailers with combined stop and turn lamps. With all trailer connection features, the socket is a standard SAE recommended socket used in the trucking industry. The circuit arrangement in the socket is also the same as SAE recommendation except that 08TMG provides combined stop and turn signals.

System Block Diagram:

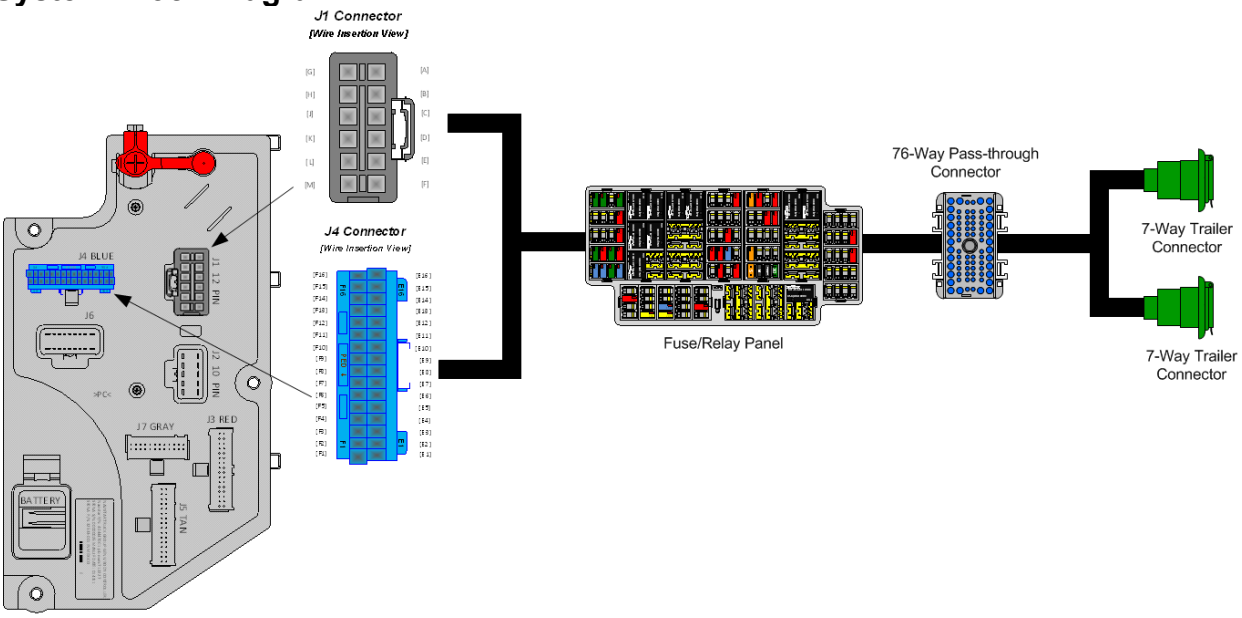

Body Controller Software Feature Codes:

- 597054 – BCM PROG, TRAILER LIGHTING

Body Controller Software Feature Code Parameters:

Parameter	ID	Description	Default	Units	Min	Max	Step
Trailer_Left_Turn_ Lamp_OC_Current	3175	Trailer Left Lamp Open Circuit Detection Level value range	0	A	0	20	0.1

Trailer_Left_Turn_Lamp_Low_Current	3177	Trailer Left Lamp Low Current Detection Level value range	0	A	0	20	0.1
Trailer_Left_Turn_Lamp_High_Current	3178	Trailer Left Lamp High Current Detection Level value range	15	A	0	20	0.1
Trailer_Right_Turn_Lamp_High_Current	3179	Trailer Right Lamp High Current Detection Level value range	15	A	0	20	0.1
Trailer_Right_Turn_Lamp_Low_Current	3180	Trailer Left Lamp Low Current Detection Level value range	0	A	0	20	0.1
Trailer_Right_Turn_Lamp_OC_Current	3181	Trailer Left Lamp Open Circuit Detection Level value range	0	A	0	20	0.1
Trailer_Marker_Lamp_High_Current	3182	Trailer Marker Lamp High Current Detection Level value range	20	A	0	20	0.1
Trailer_Marker_Lamp_Low_Current	3183	Trailer Marker Lamp Low Current Detection Level value range	0	A	0	20	0.1
Trailer_Marker_Lamp_OC_Current	3184	Trailer Marker Lamp Open Circuit Detection Level value range	0	A	0	20	0.1
Trailer_Tail_Lamp_High_Current	3185	Trailer Tail Lamp High Current Detection Level value range	20	A	0	20	0.1
Trailer_Tail_Lamp_Low_Current	3186	Trailer Tail Lamp Low Current Detection Level value range	0	A	0	20	0.1
Trailer_Tail_Lamp_OC_Current	3187	Trailer Tail Lamp Open Circuit Detection Level value range	0	A	0	20	0.1

Parameter Definitions:

- **Trailer_Left_Turn_Lamp_OC_Current** – This parameter sets the minimum fuse level for the open circuit of the Trailer Left Turn Lamp. If the current draw is below this value, a fault will be set.
- **Trailer_Left_Turn_Lamp_Low_Current** – This parameter sets the minimum fuse level for normal operation of the Trailer Left Turn Lamp. If the current draw exceeds this value, the circuit will open.
- **Trailer_Left_Turn_Lamp_High_Current** – This parameter sets the maximum fuse level for normal operation of the Trailer Left Turn Lamp. If the current draw exceeds this value, the circuit will open.
- **Trailer_Right_Turn_Lamp_High_Current** – This parameter sets the maximum fuse level for normal operation of the Trailer Right Turn Lamp. If the current draw exceeds this value, the circuit will open.
- **Trailer_Right_Turn_Lamp_Low_Current** – This parameter sets the minimum fuse level for normal operation of the Trailer Right Turn Lamp. If the current draw exceeds this value, the circuit will open.
- **Trailer_Right_Turn_Lamp_OC_Current** – This parameter sets the minimum fuse level for the open circuit of the Trailer Right Turn Lamp. If the current draw is below this value, a fault will be set.
- **Trailer_Marker_Lamp_High_Current** – This parameter sets the maximum fuse level for normal operation of the Trailer Marker Lamp. If the current draw exceeds this value, the circuit will open.

- **Trailer_Marker_Lamp_Low_Current** – This parameter sets the minimum fuse level for normal operation of the Trailer Marker Lamp. If the current draw exceeds this value, the circuit will open.
- **Trailer_Marker_Lamp_OC_Current** – This parameter sets the minimum fuse level for the open circuit of the Trailer Marker Lamp. If the current draw is below this value, a fault will be set.
- **Trailer_Tail_Lamp_High_Current** – This parameter sets the maximum fuse level for normal operation of the Trailer Tail Lamp. If the current draw exceeds this value, the circuit will open.
- **Trailer_Tail_Lamp_Low_Current** – This parameter sets the minimum fuse level for normal operation of the Trailer Tail Lamp. If the current draw exceeds this value, the circuit will open.
- **Trailer_Tail_Lamp_OC_Current** – This parameter sets the minimum fuse level for the open circuit of the Trailer Tail Lamp. If the current draw is below this value, a fault will be set.

How to Add This Feature:
Adding these features after the vehicle is built is not an easy task. It is encouraged that the vehicle be ordered with the desired feature. The installation requires additional fuses and relays be added to the Power Distribution Center (PDC) in the cab. Be sure to label the function of the added relays and fuses to the decal on the underside of the PDC cover. The loose circuits will be numbered and correspond to the circuits outlined in the circuit diagram manual.

How to Test This Feature:
1. Turn on vehicle headlights.
2. Verify that the tail lights circuit (brown wire, top left cavity on trailer socket) has battery voltage levels
present.
3. Verify that trailer marker circuit (black wire, top right cavity on trailer socket) has battery voltage levels
present.
4. Turn off vehicle headlights.
5. Turn on vehicle right turn lamp.
6. Verify that the trailer right turn/stop lamp circuit (green wire, bottom left cavity on trailer socket) is cycling between battery voltage and GND.
7. Turn off vehicle right turn lamp.
8. Turn on vehicle left turn lamp.
9. Verify that the trailer left turn/stop lamp circuit (yellow wire, bottom right cavity on trailer socket) is cycling between battery voltage and GND
10. Turn off vehicle left turn lamp.
11. Press the vehicle brake pedal.

12. Verify that the right turn/stop circuit (green wire, bottom left cavity on trailer socket) and the left turn/stop circuit (yellow wire, bottom right cavity on trailer socket) have battery voltage levels present.
13. Verify that the trailer brake light circuit (red wire, bottom center cavity on trailer socket) has battery voltage levels present when the IGN key is in the accessory position.
14. Release brake pedal.

Note: This feature uses body controller-based software controls which can be diagnosed with the Navistar® Diamond Logic® Builder software (see local dealer if not owned).

References:
Refer to the applicable International® Circuit Diagrams and Service Manuals

16.18. 08TMN: TRAILER CONNECTION SOCKET {Phillips STA-DRY} 7-Way; Equipped with ABS Feed, Mounted at BOC, and End of Frame Locations.

Feature Applicability to Vehicle Platforms:

- Heavy Vocational (HV)
- Medium Vocational (MV)
- Heavy Extreme (HX) 2021 and Newer

Extended Description: This feature is used to connect trailer lighting circuits to the vehicle. This option provides two trailer sockets. One socket is located back of cab and the other is mounted at the end of frame. The feature provides separate stop and turn signals. Each 7-way socket provides an IGN-controlled fused 30-AMP center pin for trailer Antilock Brake Systems (ABS). Feature 08TMN is designed for trailers with separate stop and turn lamps. With all trailer connection features, the socket is a standard SAE recommended socket used in the trucking industry. The circuit arrangement in the socket is also the same as SAE recommendation.

System Block Diagram:

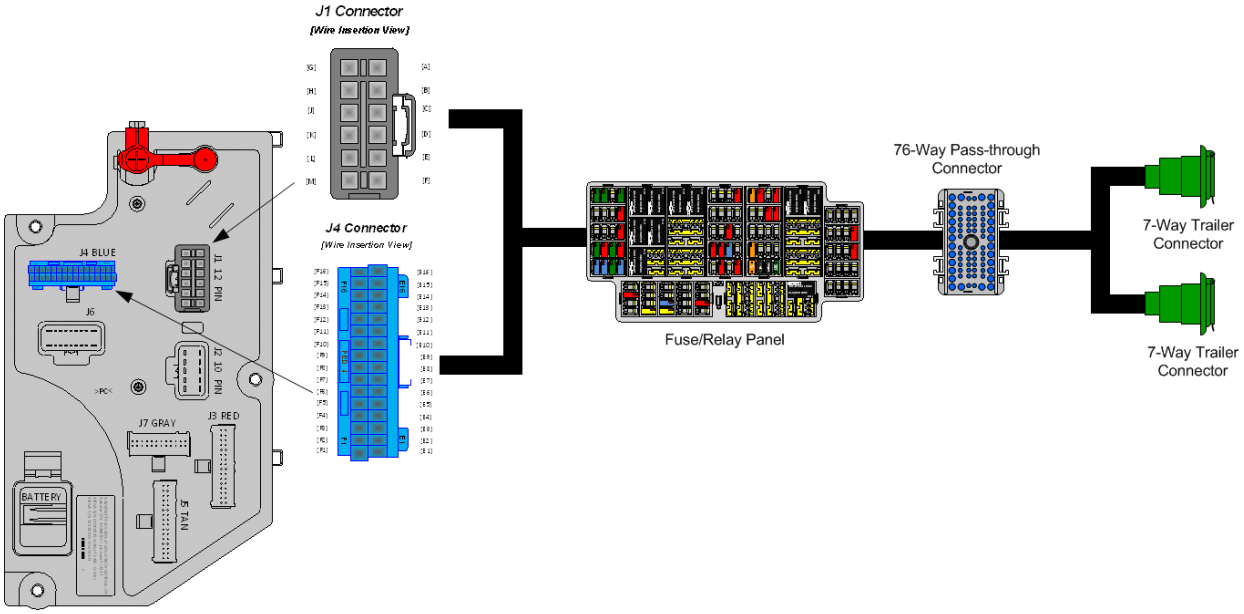

Body Controller Software Feature Codes:

- 597054 – BCM PROG, TRAILER LIGHTING

Body Controller Software Feature Code Parameters:

Parameter	ID	Description	Default	Units	Min	Max	Step
Trailer_Left_Turn_ Lamp_OC_Current	3175	Trailer Left Lamp Open Circuit Detection Level value range	0	A	0	20	0.1

Trailer_Left_Turn_Lamp_Low_Current	3177	Trailer Left Lamp Low Current Detection Level value range	0	A	0	20	0.1
Trailer_Left_Turn_Lamp_High_Current	3178	Trailer Left Lamp High Current Detection Level value range	15	A	0	20	0.1
Trailer_Right_Turn_Lamp_High_Current	3179	Trailer Right Lamp High Current Detection Level value range	15	A	0	20	0.1
Trailer_Right_Turn_Lamp_Low_Current	3180	Trailer Left Lamp Low Current Detection Level value range	0	A	0	20	0.1
Trailer_Right_Turn_Lamp_OC_Current	3181	Trailer Left Lamp Open Circuit Detection Level value range	0	A	0	20	0.1
Trailer_Marker_Lamp_High_Current	3182	Trailer Marker Lamp High Current Detection Level value range	20	A	0	20	0.1
Trailer_Marker_Lamp_Low_Current	3183	Trailer Marker Lamp Low Current Detection Level value range	0	A	0	20	0.1
Trailer_Marker_Lamp_OC_Current	3184	Trailer Marker Lamp Open Circuit Detection Level value range	0	A	0	20	0.1
Trailer_Tail_Lamp_High_Current	3185	Trailer Tail Lamp High Current Detection Level value range	20	A	0	20	0.1
Trailer_Tail_Lamp_Low_Current	3186	Trailer Tail Lamp Low Current Detection Level value range	0	A	0	20	0.1
Trailer_Tail_Lamp_OC_Current	3187	Trailer Tail Lamp Open Circuit Detection Level value range	0	A	0	20	0.1

Parameter Definitions:

- **Trailer_Left_Turn_Lamp_OC_Current** – This parameter sets the minimum fuse level for the open circuit of the Trailer Left Turn Lamp. If the current draw is below this value, a fault will be set.
- **Trailer_Left_Turn_Lamp_Low_Current** – This parameter sets the minimum fuse level for normal operation of the Trailer Left Turn Lamp. If the current draw exceeds this value, the circuit will open.
- **Trailer_Left_Turn_Lamp_High_Current** – This parameter sets the maximum fuse level for normal operation of the Trailer Left Turn Lamp. If the current draw exceeds this value, the circuit will open.
- **Trailer_Right_Turn_Lamp_High_Current** – This parameter sets the maximum fuse level for normal operation of the Trailer Right Turn Lamp. If the current draw exceeds this value, the circuit will open.
- **Trailer_Right_Turn_Lamp_Low_Current** – This parameter sets the minimum fuse level for normal operation of the Trailer Right Turn Lamp. If the current draw exceeds this value, the circuit will open.
- **Trailer_Right_Turn_Lamp_OC_Current** – This parameter sets the minimum fuse level for the open circuit of the Trailer Right Turn Lamp. If the current draw is below this value, a fault will be set.
- **Trailer_Marker_Lamp_High_Current** – This parameter sets the maximum fuse level for normal operation of the Trailer Marker Lamp. If the current draw exceeds this value, the circuit will open.

- **Trailer_Marker_Lamp_Low_Current** – This parameter sets the minimum fuse level for normal operation of the Trailer Marker Lamp. If the current draw exceeds this value, the circuit will open.
- **Trailer_Marker_Lamp_OC_Current** – This parameter sets the minimum fuse level for the open circuit of the Trailer Marker Lamp. If the current draw is below this value, a fault will be set.
- **Trailer_Tail_Lamp_High_Current** – This parameter sets the maximum fuse level for normal operation of the Trailer Tail Lamp. If the current draw exceeds this value, the circuit will open.
- **Trailer_Tail_Lamp_Low_Current** – This parameter sets the minimum fuse level for normal operation of the Trailer Tail Lamp. If the current draw exceeds this value, the circuit will open.
- **Trailer_Tail_Lamp_OC_Current** – This parameter sets the minimum fuse level for the open circuit of the Trailer Tail Lamp. If the current draw is below this value, a fault will be set.

How to Test This Feature:
Turn on vehicle headlights.
2. Verify that the tail light circuit, Cavity A of 7-way socket with brown 14-gauge wire, has battery voltage levels present.
3. Verify that the marker light circuit, Cavity D of 7-way socket with brown 14-gauge wire, has battery voltage levels present
4. Turn OFF vehicle headlights.
5. Turn on left turn signal in vehicle.
6. Verify that left turn/stop circuit, Cavity B of 7-way socket with yellow 16-gauge wire, is cycling between battery voltage and GND.
7. Turn off vehicle left turn signal.
8. Turn on right turn signal in vehicle.
9. Verify that right turn/stop circuit, Cavity C of 7-way socket with light green 16-gauge wire, is cycling between battery voltage and GND.
10. Turn off vehicle right turn signal.
11. Put the vehicle in reverse.
12. Verify that the body backup lights are working correctly.
13. Verify that the backup light circuit, Cavity E of 7-way socket with light blue 16-gauge wire, has battery voltage levels present.
14. Take the vehicle out of reverse.
15. Turn key to accessory or IGN position.
16. Verify that the accessory circuit, Cavity F of 7-way socket with light blue 14-gauge wire, has battery voltage levels present.
17. Press the vehicle brake pedal.
18. Verify that the brake lights are functioning correctly.
19. Verify that the left turn/stop circuit, Cavity B of 7-way socket with yellow 16-gauge wire, AND the right turn/stop circuit, Cavity C of 7-way socket with light green 16-gauge wire have battery voltage levels present.
20. Release brake pedal.

Note: This feature uses body controller-based software controls which can be diagnosed with the Navistar® Diamond Logic® Builder software (see local dealer if not owned).

References:
Refer to the applicable International® Circuit Diagrams and Service Manuals

16.19. 60AKK: BDY INTG, HEADLIGHTS, WIG WAG High Beam Wig Wag with Park Brake Interlock, Park Brake Disables Wig Wag.

Feature Applicability to Vehicle Platforms:

- Heavy Vocational (HV)
- Medium Vocational (MV)
- Heavy Extreme (HX) 2021 and Newer

Extended Description: 60AKK is the Wig Wag feature for use on emergency vehicles. This feature provides 13 different flash patterns for vehicle high beams. The different flash patterns can be selected by changing a parameter for the feature using Diamond Logic® Builder as detailed in the feature parameter section. The feature includes a two-position latching switch located in the instrument panel labeled Wig Wag. To enable the wig wag feature, the Wig Wag switch must be pressed to the Enable (UP) position. To disable the wig wag feature, the Wig Wag switch must be pressed to the DOWN position. High beams will only flash when the park brake is released. If high beams are requested from the headlight switch, the high beams will come on steady. The headlight switch has ultimate control.

System Block Diagram:

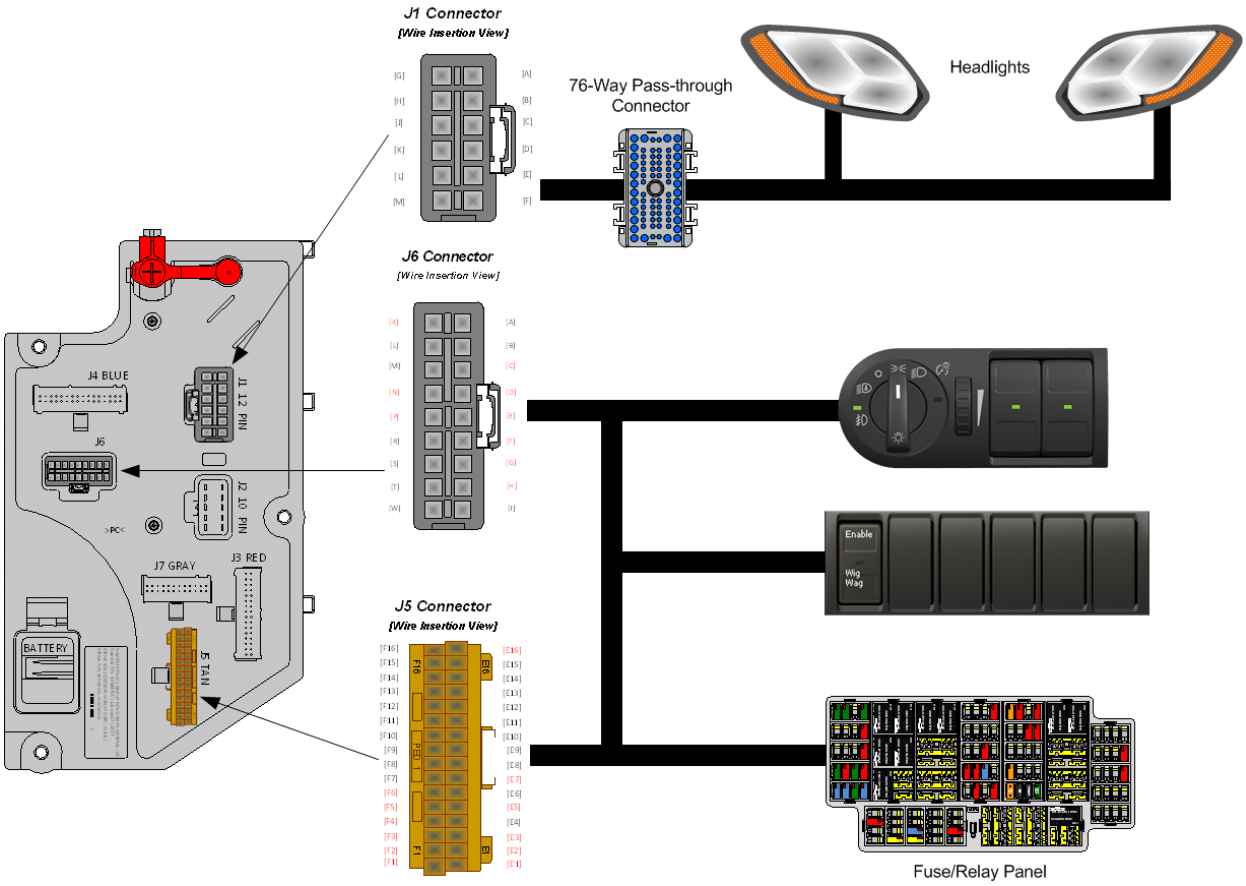

Body Controller Software Feature Codes:

- 597298 – BCM PROG, HEADLIGHTS WIG WAG with High beam

Body Controller Software Feature Code Parameters:

Parameter	ID	Description	Default	Units	Min	Max
Wig_Wag_Cad	2629	Determines the method of flashing for the wig wag headlights.	1	No Units	1	13

Parameter Definitions:

- **Wig_Wag_Cad** - This parameter specifies the Wig Wag pattern for the headlights. The pattern explanation is very complex. Refer to the USER GUIDE Diamond Logic® Builder Software (Advanced Logic Programming) for the pattern and timing of the headlight wig wags.

Note/s About Possible Software Feature Conflicts:

597190

How to Test This Feature:
1. Turn Wig Wag switch on with Park Brake released.
2. Verify that High Beams are flashing in the pattern selected by the Wig_Wag_Cad parameter.
3. Set Park Brake and verify that Wig Wag pattern stops.
4. Turn Wig Wag switch on with Park Brake released.
5. Verify the High Beams are flashing in the pattern selected by the Wig_Wag_Cad parameter.
6. Turn Wig Wag switch off and verify that Wig Wag stops.

References:
Refer to the applicable International® Circuit Diagrams and Service Manuals

16.20. 60AKL: BDY INTG, HEADLIGHTS, WIG WAG High Beam Wig Wag with Park Brake Interlock, Park Brake Disables High Beam Wig Wag, Enables Low Beam Wig Wag.

Feature Applicability to Vehicle Platforms:
- Heavy Vocational (HV)
- Medium Vocational (MV)
- Heavy Extreme (HX) 2021 and Newer

Extended Description: 60AKL is the Wig Wag feature for non-emergency vehicles. This feature provides 13 different flash patterns for vehicle headlights. The different flash patterns can be selected by changing a parameter for the feature using Diamond Logic® Builder software as detailed in the feature parameter section. The feature includes a two-position latching switch located in the instrument panel labeled Wig Wag. To enable the wig wag feature, the Wig Wag switch must be pressed to the Enable (UP) position. To disable the wig wag feature, the Wig Wag switch must be pressed to the DOWN position. High beams will only flash when park brake is released. Low beams will flash whenever requested to. Headlight switch has ultimate control. When vehicle is moving, if high beams are selected, low beams will flash; if low beams are selected, high beams will flash.

System Block Diagram:

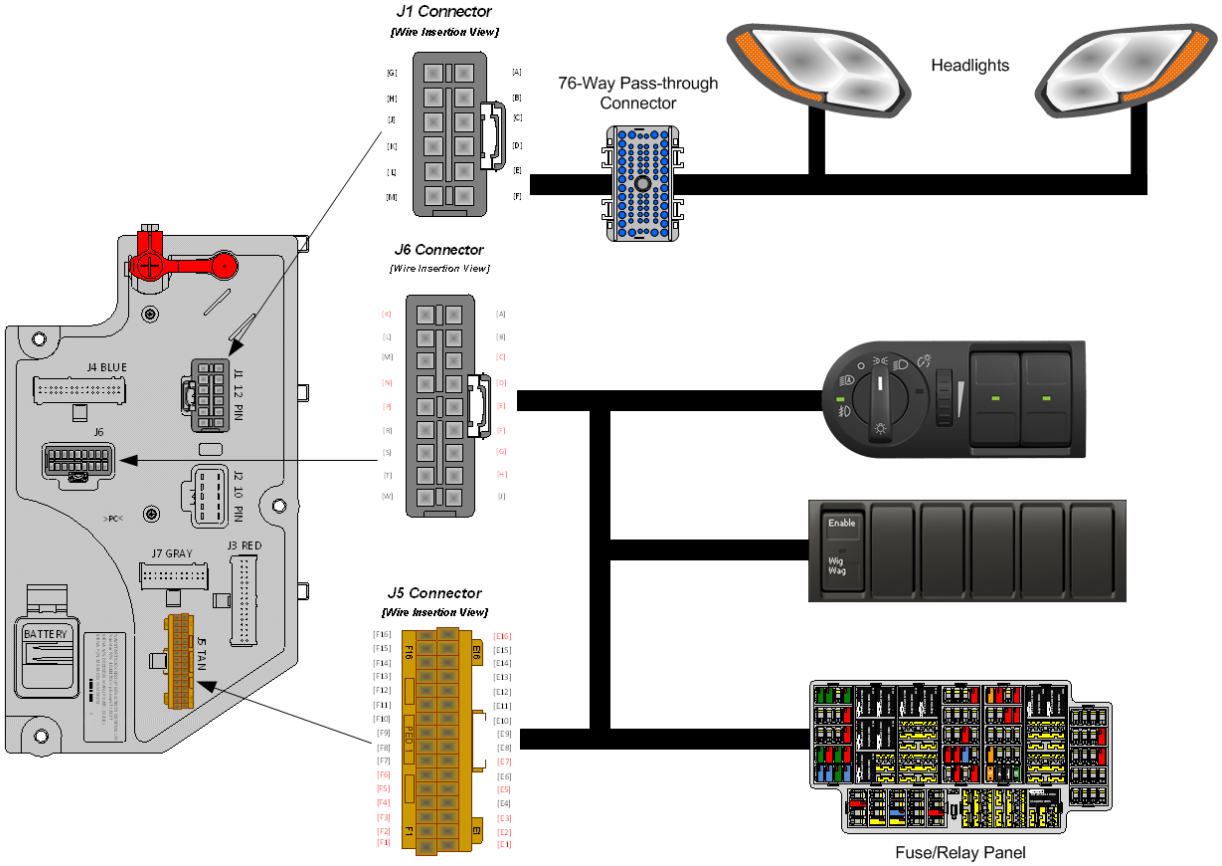

Body Controller Software Feature Codes:

- 597190 – BCM PROG, HEADLIGHTS WIG WAG with Low beam or High Beam Flash

Body Controller Software Feature Code Parameters:

Parameter	ID	Description	Default	Units	Min	Max
Wig_Wag_Cad	2629	Determines the method of flashing for the wig wag headlights.	1	No Units	1	13

Parameter Definitions:

- **Wig_Wag_Cad** - This parameter specifies the Wig Wag pattern for the headlights. The pattern explanation is very complex. Refer to the USER GUIDE Diamond Logic® Builder Software (Advanced Logic Programming) for the pattern and timing of the headlight wig wags.

Note/s About Possible Software Feature Conflicts:

597298

How to Test This Feature:
1. Turn Wig Wag switch on with Park Brake released.
2. Verify that High Beams are flashing in the pattern selected by the Wig_Wag_Cad parameter.
3. If Daytime_Running_Light_Disable parameter was set, verify that Daytime Running Lights are not on during the Wig Wag.
4. Set Park Brake and verify that Wig Wag pattern stops.
5. Turn Wig Wag switch on with Park Brake released.
6. Verify the High Beams are flashing in the pattern selected by the Wig_Wag_Cad parameter.
7. Turn Wig Wag switch off and verify that Wig Wag stops.

References:
Refer to the applicable International® Circuit Diagrams and Service Manuals

17. CB and 2-Way Radio Accommodation Packages

17.1. 08RBK: CB ANTENNA (2) {Pana-Pacific} Full Wave; 4.0' Length Includes "International®" Name on Top.

Feature Applicability to Vehicle Platforms:

- Line Haul Transport (LT)

Extended Description: This feature provides two 4’ long CB antennas. This feature should be ordered if dual antennas are needed in addition to one of the available two-way radio accommodation packages.

Parts Associated with This Feature:

PART NUMBER	DESCRIPTION
1661196C1	2-WAY CONNECTOR, BODY
1661209C1	WIRE TERMINAL 16-GAUGE

Parts Associated with CB Radio Mating Connector

How to Test This Feature:
To test these circuits, verify that battery voltage is present in the correct key-state for each respective feature.

References:
Refer to the applicable International® Circuit Diagrams and Service Manuals.

17.2. 08RCB: CB RADIO Accommodation Package; Header Mounted; Feeds from Accessory Side of Ignition Switch; Includes Power Source and Two Antenna Bases with Wiring.

Feature Applicability to Vehicle Platforms:

- Line Haul Transport (LT)

Extended Description: When installing a CB radio, this feature provides the power circuits required for hook-up. This accommodation package includes a two-way connector with a 10-Amp accessory power feed and cab ground, dual CB antenna cables routed from the mirrors to the cab overhead console panel opening and two CB antenna mounts located at the top of each mirror. A strap is also provided in the header to mount the customer-supplied CB radio. The antennas are not provided with this code. If the two antennas are desired, 08RBK must be ordered.

System Block Diagram:

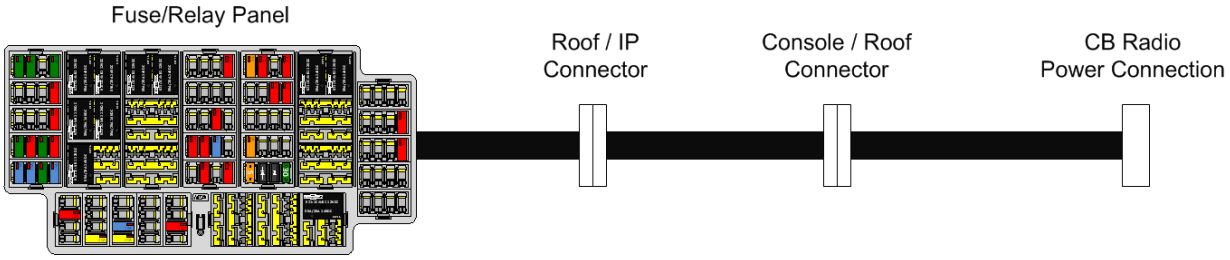

Parts Associated with This Feature:

PART NUMBER	DESCRIPTION
1661196C1	2-WAY CONNECTOR, BODY
1661209C1	WIRE TERMINAL 16-GAUGE

Parts Associated with CB Radio Mating Connector

How to Test This Feature:
To test these circuits, verify that battery voltage is present in the correct key-state for each respective feature.

References:
Refer to the applicable International® Circuit Diagrams and Service Manuals.

17.3. 08REA: 2-WAY RADIO Wiring Effects; Wiring with 20-Amp Fuse Protection, Includes Ignition Wire with 5-Amp Fuse, Wire Ends Heat Shrink and 10' Coil Taped to Base Harness.

Feature Applicability to Vehicle Platforms:

- Heavy Vocational (HV)
- Medium Vocational (MV)
- Heavy Extreme (HX) 2021 and Newer

Extended Description: This feature provides a 20-Amp fused battery feed, 5-Amp ignition feed and ground wire for applications requiring two-way radio communications. The three wires are taped to the cab harness behind the center dash instrument panel.

System Block Diagram:

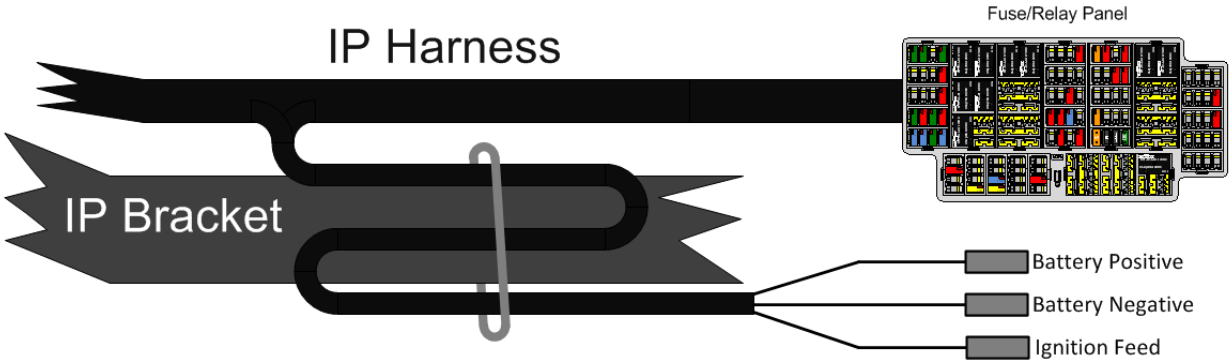

How to Test This Feature:
To test these circuits, verify that battery voltage is present in the correct key-state for each respective feature.

References:
Refer to the applicable International® Circuit Diagrams and Service Manuals.

17.4. 08RGA: 2-WAY RADIO Wiring Effects; Wiring with 20-Amp Fuse Protection, Includes Ignition Wire with 5-Amp Fuse, Wire Ends Heat Shrink and Routed to Center of Header Console in Cab.

Feature Applicability to Vehicle Platforms:

- Heavy Vocational (HV)
- Medium Vocational (MV)
- Heavy Extreme (HX) 2021 and Newer

Extended Description: This feature provides a 20-Amp fused battery feed, 5-Amp fused ignition feed and ground wire for applications requiring two-way radio communications. The three wires are located in the center of the header console in the cab.

System Block Diagram:

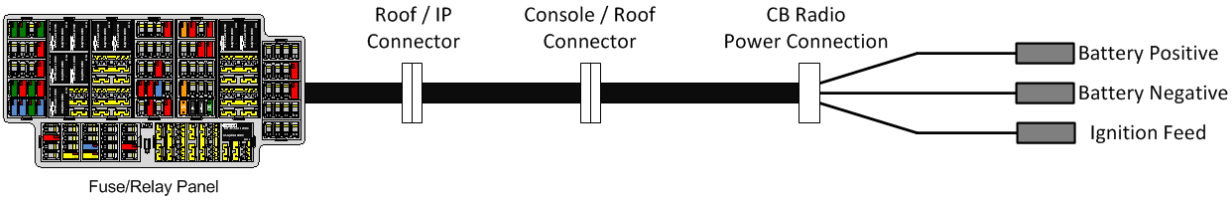

How to Test This Feature:
To test these circuits, verify that battery voltage is present in the correct key-state for each respective feature.

References:
Refer to the applicable International® Circuit Diagrams and Service Manuals.

18. Engine Speed Control Features and Accommodation Packages

18.1. 12VGV: ACCESSORY WIRING, SPECIAL for Road Speed Wire Coiled Under Instrument Panel for Customer Use, Unconditioned Manual Transmission Output Shaft Speed, Additional Body Builder Signal Conditioning may be Required to Utilize Signal

Note: This circuit can be difficult to locate. It is known to have been found between the driver and passenger side of the instrument panel, near the floor, behind a panel.

Feature Applicability to Vehicle Platforms:

- Heavy Vocational (HV)
- Heavy Extreme (HX) 2021 and Newer

Extended Description: This feature provides a vehicle speed signal source from the engine ECM. This speedometer output is calibrated to 30,000 pulses per mile. The wire is coiled up behind the center instrument panel.

System Block Diagram:

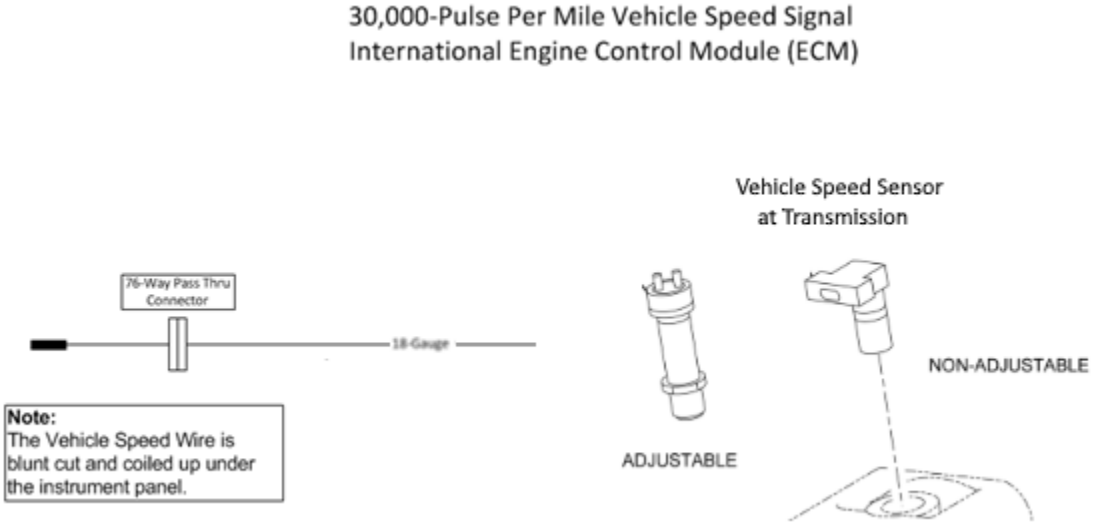

References:
Refer to the applicable International® Circuit Diagrams and Service Manuals.

18.2. 12VXT: THROTTLE, HAND CONTROL Engine Speed Control; Electronic, Stationary, Variable Speed; Mounted on Steering Wheel.

Feature Applicability to Vehicle Platforms:

- Heavy Vocational (HV)
- Medium Vocational (MV)
- Heavy Extreme (HX) 2021 and Newer

Extended Description: Stationary Variable Speed feature 12VXT allows the equipment operator to feather engine speed up or down to make fine adjustments to engine speed to achieve the desired functionality. The vehicle must be in a stationary position.

System Block Diagram:

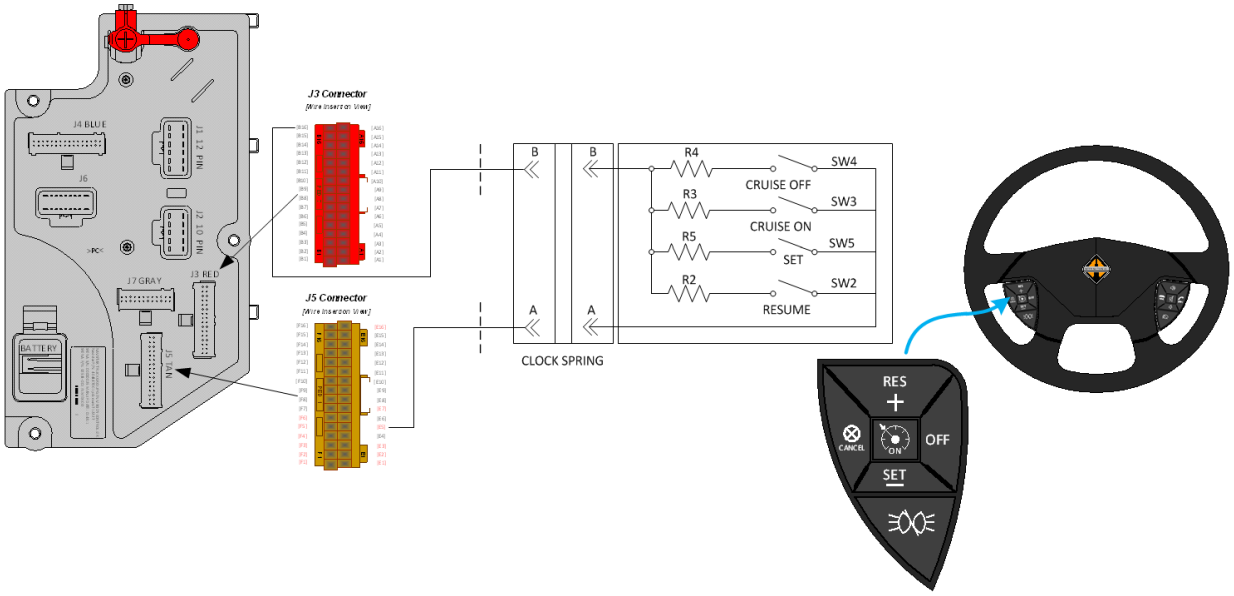

How to Test This Feature:
This feature is added by programming the Engine Control Module (ECM) for stationary, variable speed control using the International Engine Diagnostic Software package.

References:
Refer to the applicable International® Circuit Diagrams and Service Manuals.

18.3. 12VXU: THROTTLE, HAND CONTROL Engine Speed Control for AESC; Electronic, Stationary Pre-Set, Two Speed Settings; Mounted on Steering Wheel.

Feature Applicability to Vehicle Platforms:

- Heavy Vocational (HV)
- Medium Vocational (MV)
- Heavy Extreme (HX) 2021 and Newer

Extended Description: Stationary Preset Speed feature 12VXU allows the user to operate auxiliary equipment at two pre-determined engine speed settings while in a stationary position. Application examples are Garbage Packer, Recovery, Utility, and other applications that are meant to run at a set speed.

System Block Diagram:

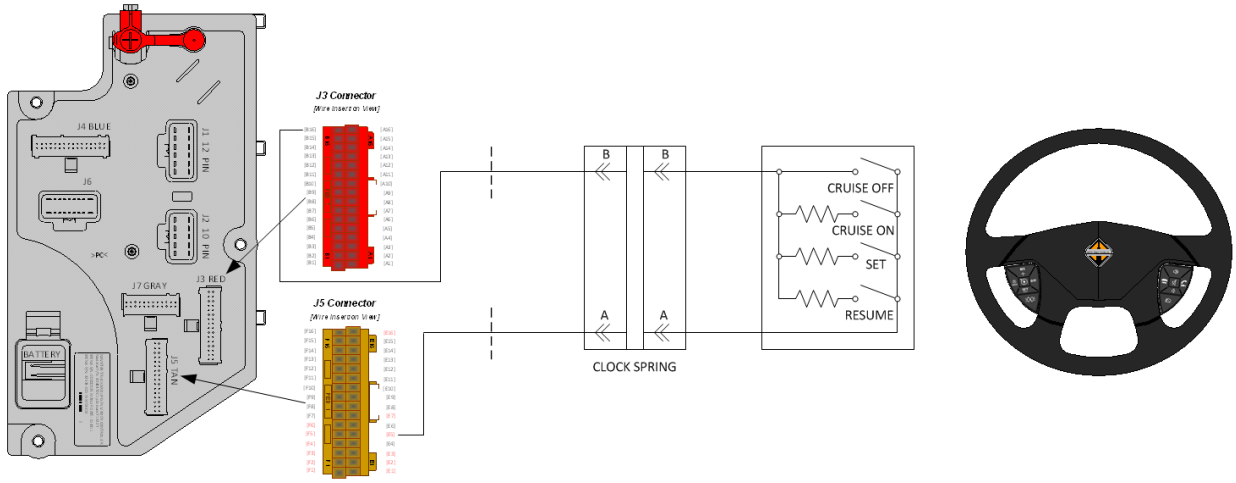

How to Test This Feature:
This feature is added by programming the Engine Control Module (ECM) for stationary, variable speed control using the International Engine Diagnostic Software package.

References:
Refer to the applicable International® Circuit Diagrams and Service Manuals.

18.4. 12VXV: THROTTLE, HAND CONTROL Engine Speed Control for AESC; Electronic, Mobile (Range 2 to 20-MPH), Variable Speed; Mounted on Steering Wheel.

Feature Applicability to Vehicle Platforms:

- Heavy Vocational (HV)
- Medium Vocational (MV)
- Heavy Extreme (HX) 2021 and Newer

Extended Description: Mobile Variable Speed feature 12VXV allows the equipment operator to feather engine speed up or down to make fine adjustments to engine speed to achieve the desired functionality. The vehicle is moving; however, the accelerator pedal is inoperative. Speed is controlled through the steering wheel controls. If the brake pedal is depressed, mobile variable speed control is in standby mode until the operator uses the steering wheel controls again to adjust speed. Application examples are Concrete Mixer, Asphalt Spreader, Dump (dumping gravel), and other applications that require fine control of engine speed while the vehicle is moving.

System Block Diagram:

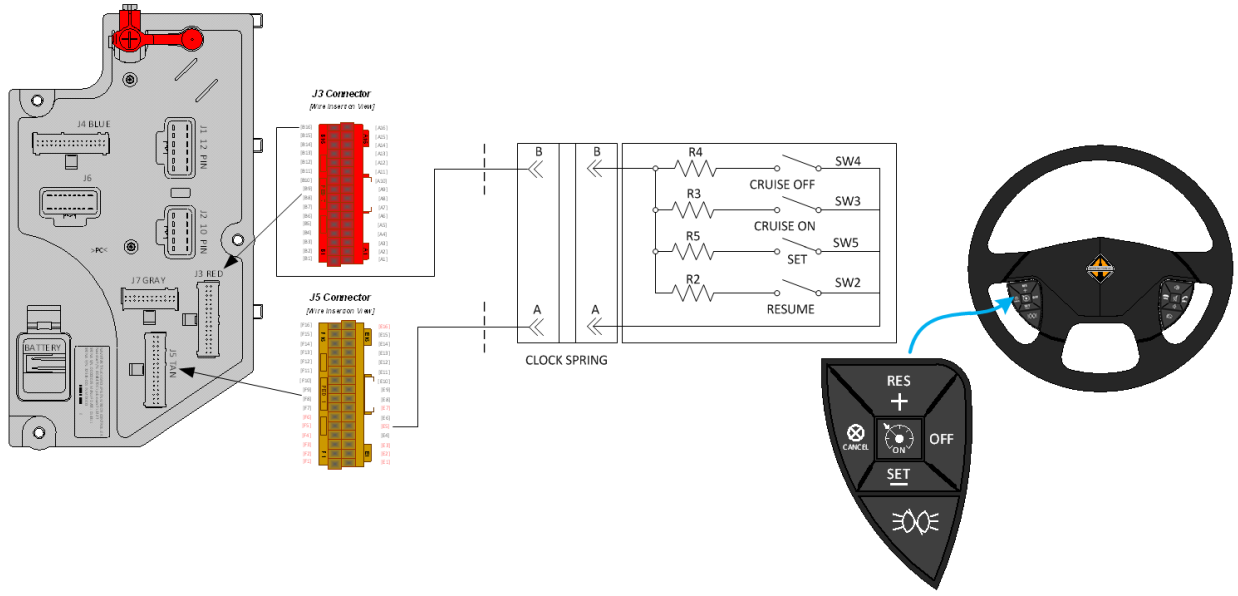

How to Test This Feature:
This feature is added by programming the Engine Control Module (ECM) for mobile, variable speed control using the International Engine Diagnostic Software package.

References:
Refer to the applicable International® Circuit Diagrams and Service Manuals.

18.5. 12VGV: ACCESSORY WIRING, SPECIAL for Road Speed Wire Coiled Under Instrument Panel for Customer Use, Unconditioned Manual Transmission Output Shaft Speed, Additional Body Builder Signal Conditioning may be Required to Utilize Signal

Feature Applicability to Vehicle Platforms:

- Heavy Vocational (HV)
- Heavy Extreme (HX) 2021 and Newer



18.6. Extended Description: This feature provides a vehicle speed signal source from the output shaft on the manual transmission. It is unconditioned. Additional body builder signal conditioning may be required to utilize this signal.
The wire is coiled up behind the center instrument panel.

System Block Diagram:

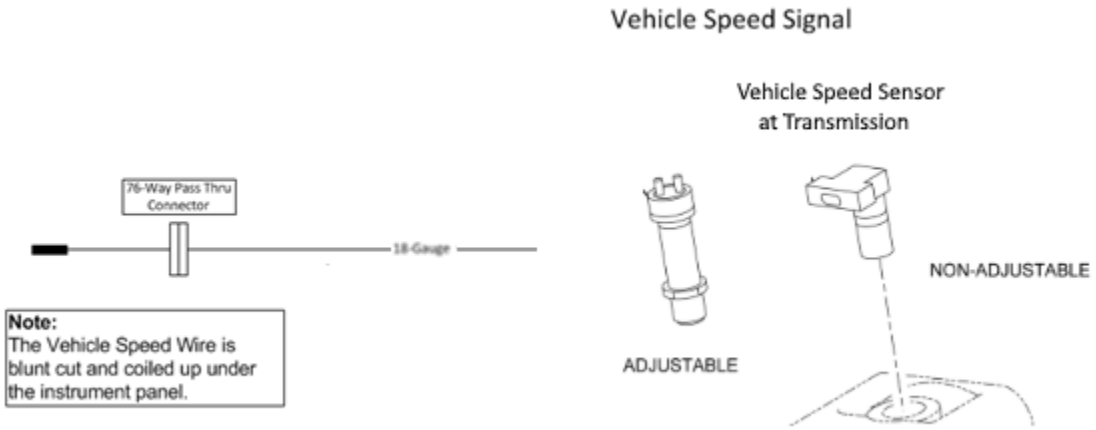

How to Test This Feature:
Specific testing requirements depend upon the customer application utilizing the International Engine Diagnostic Software package.

18.7. 12VYL: ACCESSORY WIRING, SPECIAL for Road Speed Wire Coiled Under Instrument Panel for Customer Use.



Feature Applicability to Vehicle Platforms:

- Heavy Vocational (HV)
- Medium Vocational (MV)
- Heavy Extreme (HX) 2021 and Newer

Extended Description: This feature provides a vehicle speed signal source from the engine ECM or Transmission TCM. This speedometer output from the ECM is calibrated to 30,000 pulses per mile. This speedometer output from the TCM is calibrated to 16 pulses per output shaft resolution. The wire is coiled up behind the center instrument panel.

System Block Diagram – Non S13 Engine:

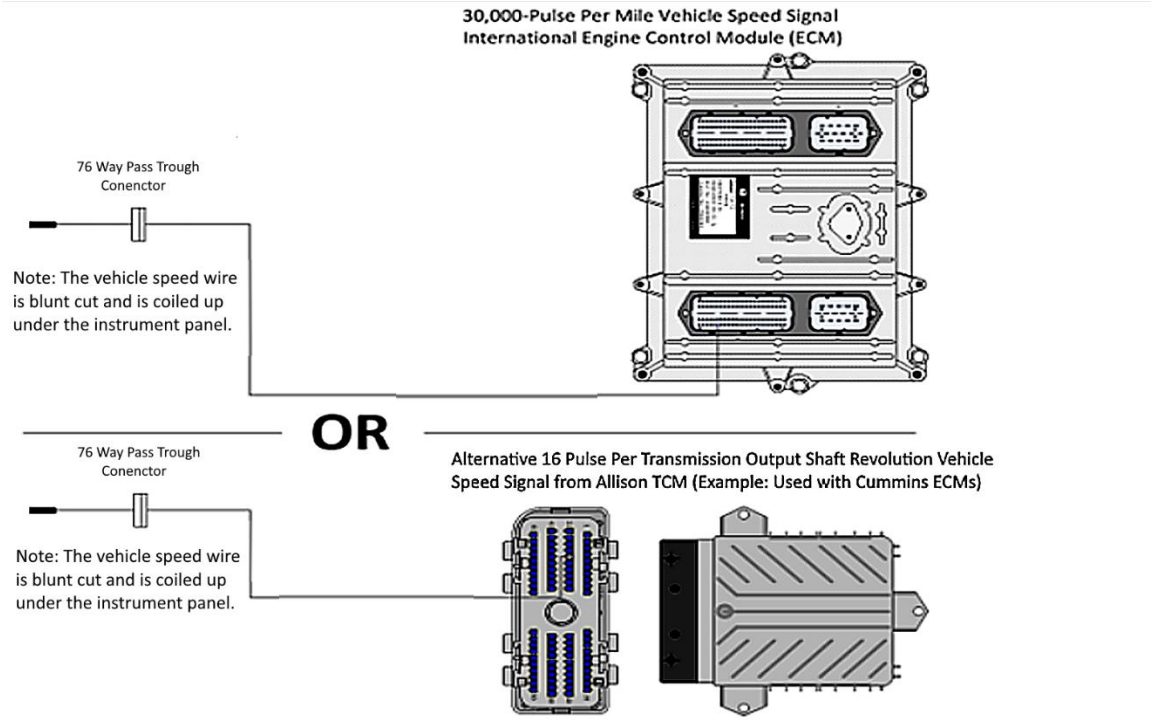

System Block Diagram – With S13 Engine:

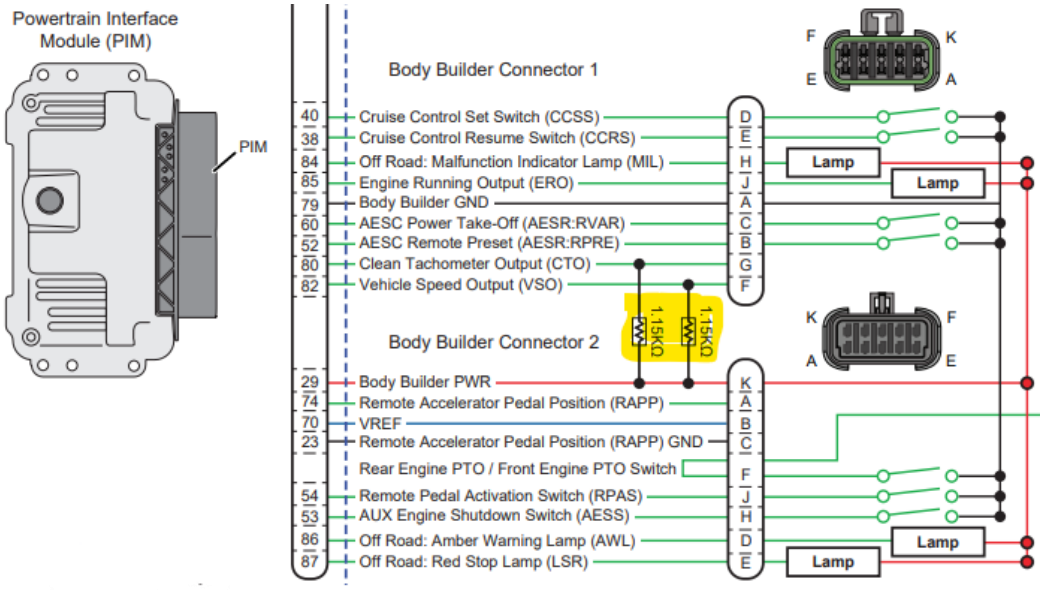

Note: With the S13 engine, the Speedometer circuits include a pull up resistor in the circuits when 12VYL is ordered. If these outputs are added to a truck that was not built with a sales feature that includes the resistor and connections are made directly to the PIM connector on pin 80 or pin 82, a 1.15 K Ohms 1 Watt pull up resistor will need to be added between the pin and a 12 volt source.

Parts Associated with International ECM & Allison TCM Connectors:

PART NUMBER	DESCRIPTION
INTERNATIONAL ENGINE CONTROL MODULE CONNECTOR "POCKET #1" PARTS	
3952655C1	96-WAY ENGINE CONTROL MODULE CONNECTOR
3687804C1	WIRE TERMINAL 20-GUAGE (GOLD PLATED)
ALLISON TRANSMISSION CONTROL MODULE CONNECTOR PARTS	
3605713C1	80-WAY TRANSMISSION CONTROL MODULE CONNECTOR (7500)
3606525C1	80-WAY TRANSMISSION CONTROL MODULE CONNECTOR LOCK
3686945C1	WIRE TERMIAL 18-GUAGE
3606525C1	CONNECTOR CAVITY PLUG

Parts Associated with the S13 Engine PIM:

- **1928405063 Bosch 94-pin connector**
- **192849255 Bosch Tin-plated terminals**
- **192849056 Bosch Tin-plated terminals 18 – 20 Gauge**
- **1928498057 Bosch Tin-plated terminals**

PART NUMBER	DESCRIPTION
INTERNATIONAL® 94-WAY POWERTRAIN INTERFACE (PIM) CONNECTOR	
4241464C1	94-WAY PIM CONNECTOR BODY
4241465C1	WIRE TERMINAL 18-GUAGE (GOLD PLATED)
10-WAY CONNECTOR 5523 (BODY BUILDER CONNECTOR 1)	
3538634C1	10-WAY CONNECTOR BODY
3538636C1	10-WAY CONNECTOR LOCK
1667742C1	WIRE TERMINAL 18-GAUGE
3568570C1	WIRE TERMINAL SEAL 18-GAUGE
2025431C1	CONNECTOR CAVITY PLUG

How to Test This Feature:

Specific testing requirements depend upon the customer application utilizing International Engine Diagnostic Software.

18.8. 12VGA Post 2022 Model Year: ENGINE CONTROL, REMOTE MOUNTED for AESC, with S13 Engines

Feature Applicability to Vehicle Platforms:

- Heavy Vocational (HV)
- Heavy Extreme (HX) 2021 and Newer

Extended Description: The 12VGA feature provides two connectors that connect to the engine's hardwired interface, for remote engine speed control and monitoring. The connectors are located in the engine compartment on the driver side near the firewall and include mating connectors with plugs for the installer to replace desired cavity locations with terminated body wiring. With the proper wiring and appropriate engine parameter settings, the body builder can remotely control preset, variable, and remote pedal engine speed. The feature also includes interface wires for FEPTO/REPTO Feedback, Engine Warning Light (EWL), Tachometer, Vehicle Speed Pulse and Oil in Water LIGHT (OWL).

Note: The post 2022 model year S13 AESC inputs need to see a **ground** signal to be activated.

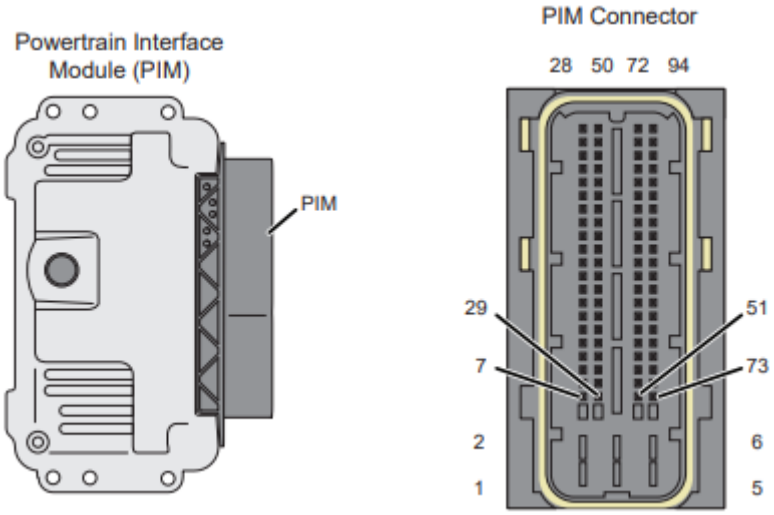

S13 PIM and Connector

Programming:

AESC Programming is set, in the PIM, using the SDS software.

Refer to the S13 engine programming documentation.

System Block Diagram:

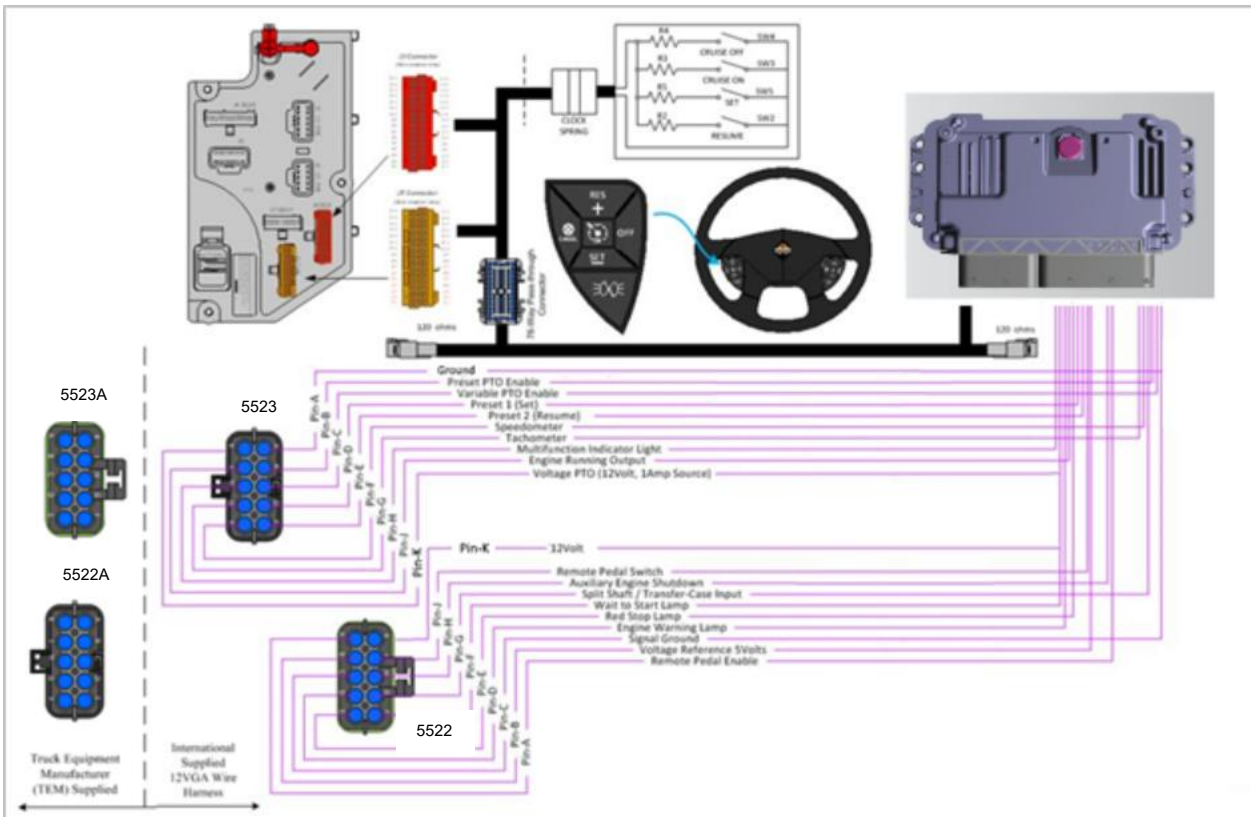

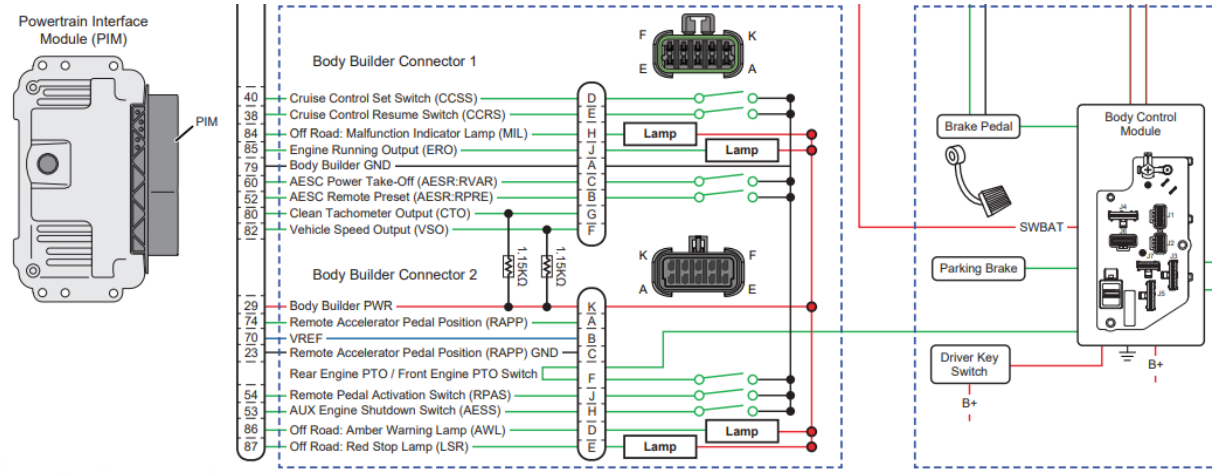

Note: Circuit numbers and connectors will vary between different models. Always refer to the applicable Circuit Diagrams to verify the correct circuit numbers.

Note: The Tachometer and Speedometer circuits include pull up resistors in the circuits when 12 VGA is ordered. If these outputs are added to a truck that was not built with a sales feature that includes the resistors and connections are made directly to pin 80 or pin 82, a 1.15 K Ohms 1 Watt pullup resistor will need to be added between the pin and a 12-volt source.

18.8.1. 12VGA Preset Set Speed - Wiring Diagram:

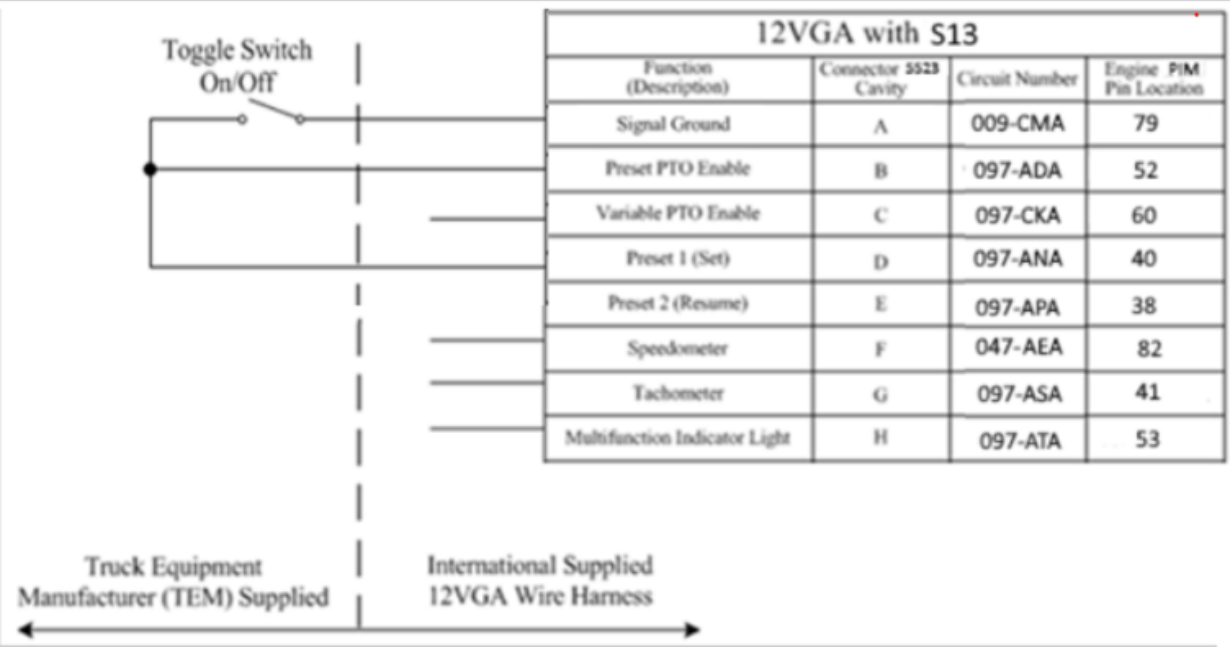

12VGA with S13

Function (Description)	Connector S523 Cavity	Circuit Number	Engine PIM Pin Location
Signal Ground	A	009-CMA	79
Preset PTO Enable	B	097-ADA	52
Variable PTO Enable	C	097-CKA	60
Preset 1 (Set)	D	097-ANA	40
Preset 2 (Resume)	E	097-APA	38
Speedometer	F	047-AEA	82
Tachometer	G	097-ASA	41
Multifunction Indicator Light	H	097-ATA	53

Wiring Diagram for 12VGA Preset Set Speed Function

18.8.2. 12VGA Preset Resume Speed - Wiring Diagram:

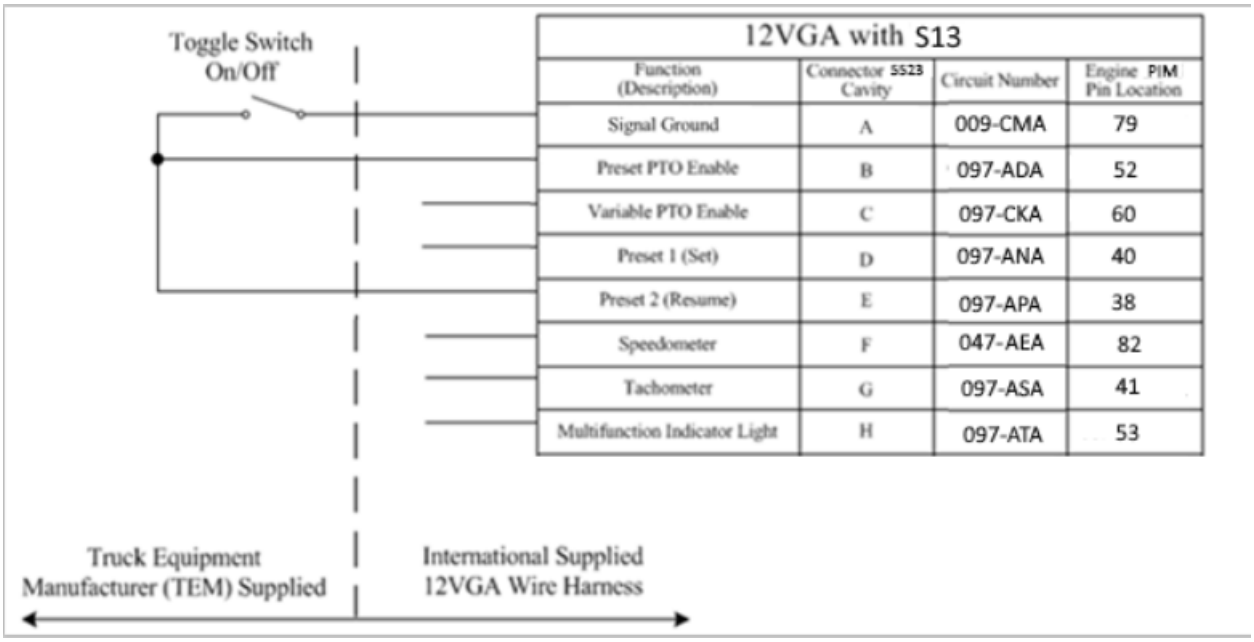

12VGA with S13			
Function (Description)	Connector S523 Cavity	Circuit Number	Engine PIM Pin Location
Signal Ground	A	009-CMA	79
Preset PTO Enable	B	097-ADA	52
Variable PTO Enable	C	097-CKA	60
Preset 1 (Set)	D	097-ANA	40
Preset 2 (Resume)	E	097-APA	38
Speedometer	F	047-AEA	82
Tachometer	G	097-ASA	41
Multifunction Indicator Light	H	097-ATA	53

Wiring Diagram for 12VGA Preset Resume Speed Function

18.8.3. 12VGA Preset Set Resume Speed - Wiring Diagram:

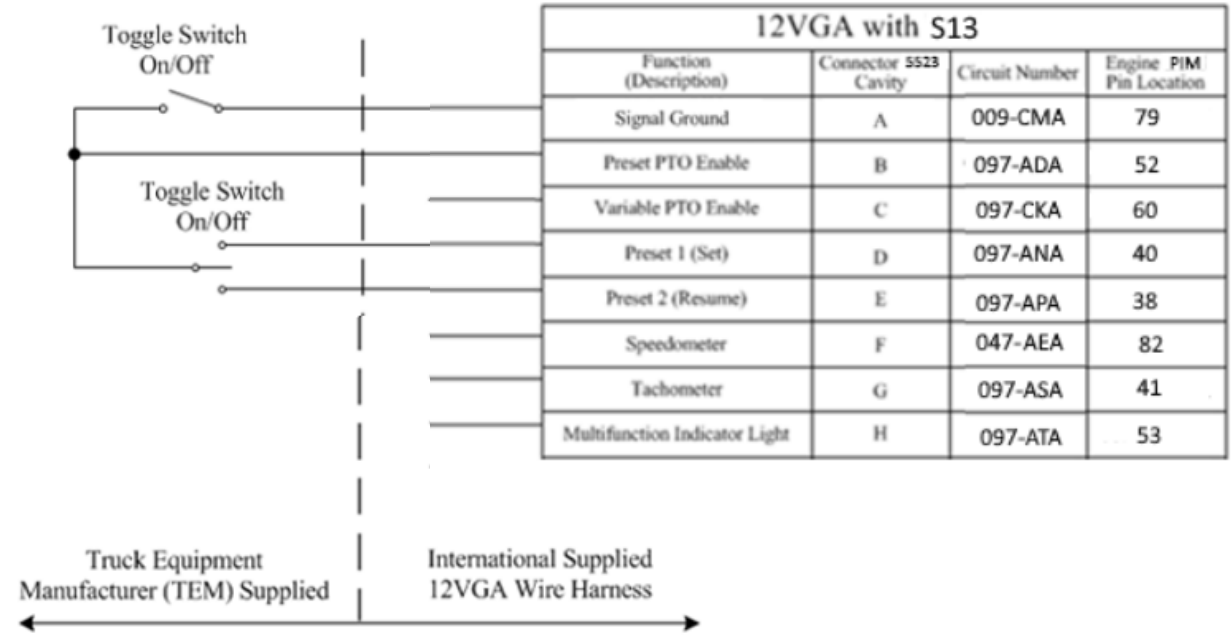

12VGA with S13			
Function (Description)	Connector S523 Cavity	Circuit Number	Engine PIM Pin Location
Signal Ground	A	009-CMA	79
Preset PTO Enable	B	097-ADA	52
Variable PTO Enable	C	097-CKA	60
Preset 1 (Set)	D	097-ANA	40
Preset 2 (Resume)	E	097-APA	38
Speedometer	F	047-AEA	82
Tachometer	G	097-ASA	41
Multifunction Indicator Light	H	097-ATA	53

Wiring Diagram for 12VGA Preset Set Resume Speed Function

18.8.4. 12VGA Variable Switch Control - Wiring Diagram:

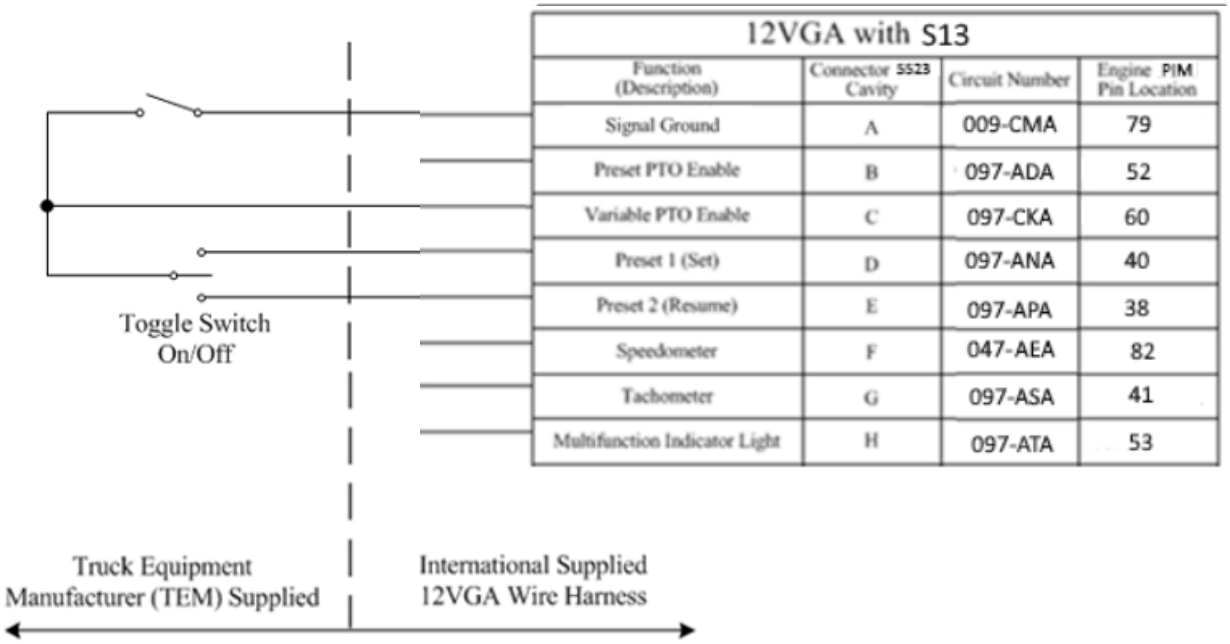

12VGA with S13			
Function (Description)	Connector S523 Cavity	Circuit Number	Engine PIM Pin Location
Signal Ground	A	009-CMA	79
Preset PTO Enable	B	097-ADA	52
Variable PTO Enable	C	097-CKA	60
Preset 1 (Set)	D	097-ANA	40
Preset 2 (Resume)	E	097-APA	38
Speedometer	F	047-AEA	82
Tachometer	G	097-ASA	41
Multifunction Indicator Light	H	097-ATA	53

Wiring Diagram for 12VGA Variable Switch Control Function

18.8.5. 12VGA Variable Pedal Control - Wiring Diagram:

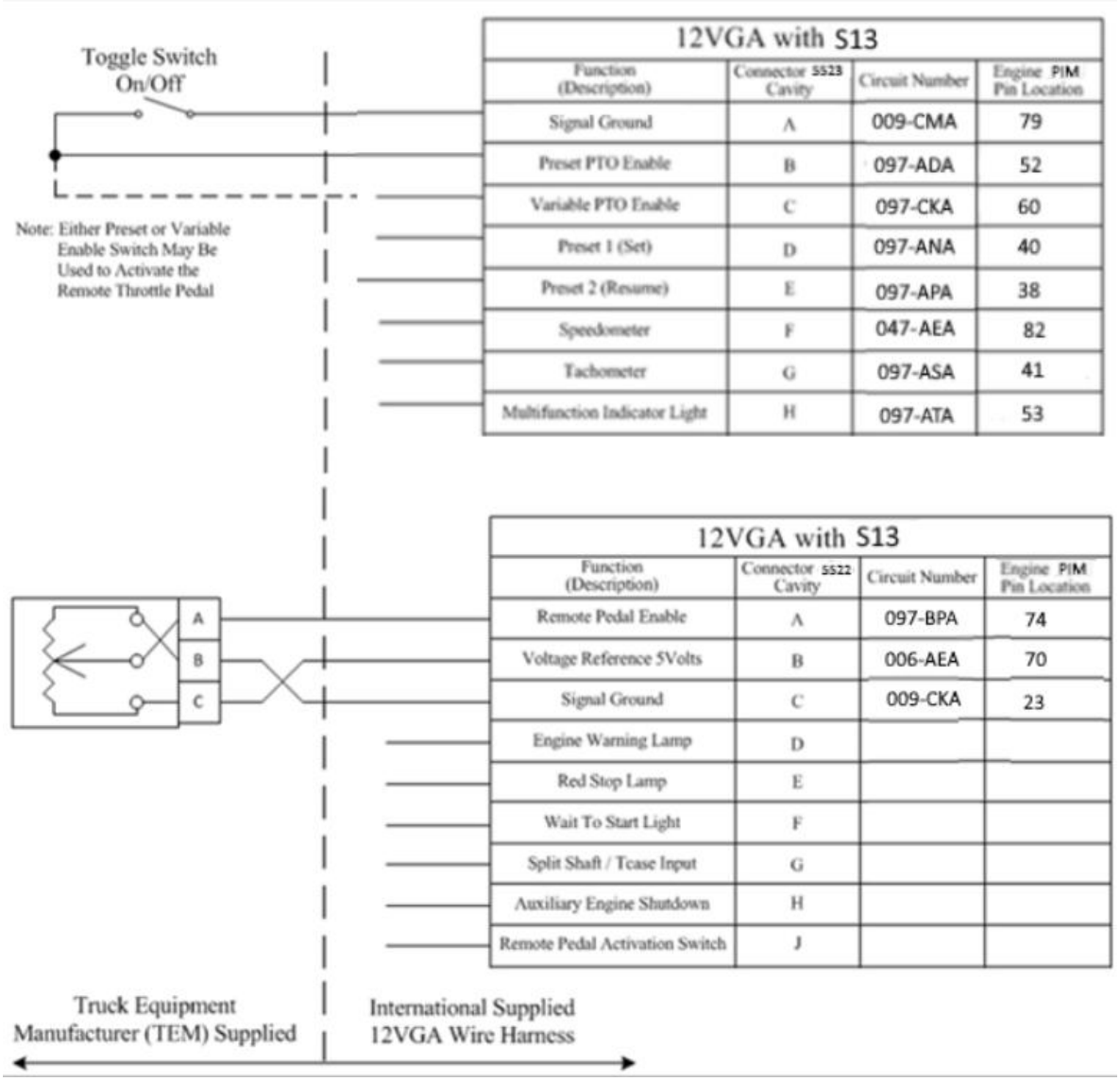

12VGA with S13

Function (Description)	Connector S523 Cavity	Circuit Number	Engine PIM Pin Location
Signal Ground	A	009-CMA	79
Preset PTO Enable	B	097-ADA	52
Variable PTO Enable	C	097-CKA	60
Preset 1 (Set)	D	097-ANA	40
Preset 2 (Resume)	E	097-APA	38
Speedometer	F	047-AEA	82
Tachometer	G	097-ASA	41
Multifunction Indicator Light	H	097-ATA	53

12VGA with S13

Function (Description)	Connector S522 Cavity	Circuit Number	Engine PIM Pin Location
Remote Pedal Enable	A	097-BPA	74
Voltage Reference 5Volts	B	006-AEA	70
Signal Ground	C	009-CKA	23
Engine Warning Lamp	D		
Red Stop Lamp	E		
Wait To Start Light	F		
Split Shaft / Tcase Input	G		
Auxiliary Engine Shutdown	H		
Remote Pedal Activation Switch	J		

Wiring Diagram for 12VGA Variable Pedal Control Function

18.8.6. 12VGA Aux Tachometer Output - Wiring Diagram:

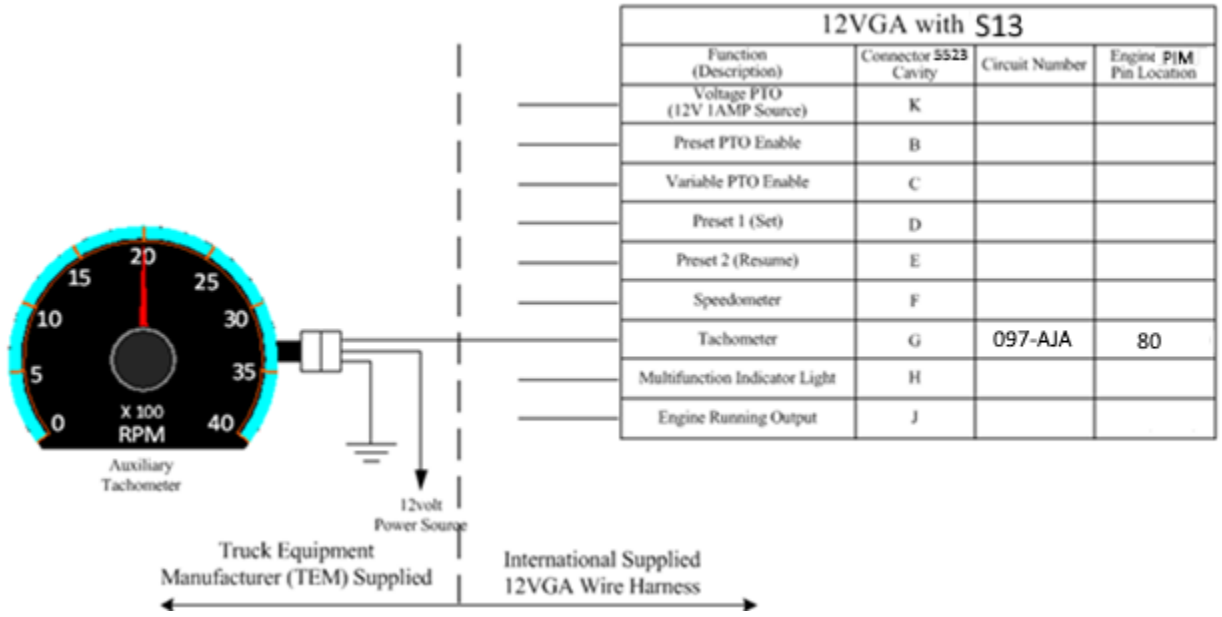

Wiring Diagram for 12VGA Aux Tachometer Output Function

18.8.7. 12VGA Aux Speedometer Output - Wiring Diagram:

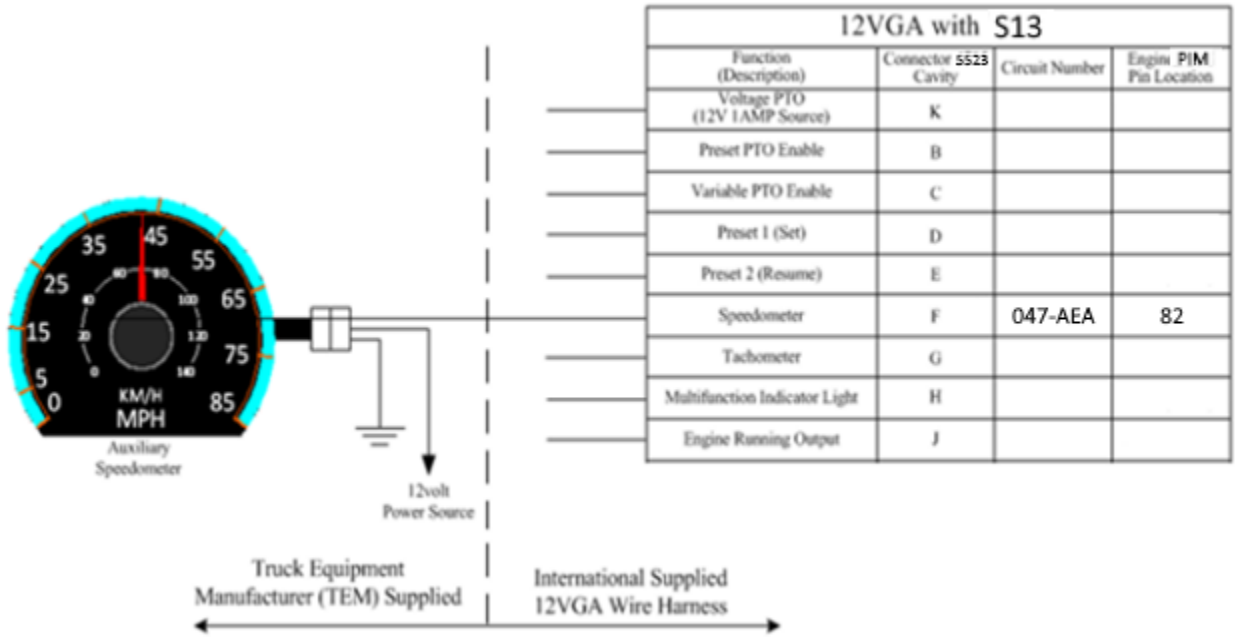

Wiring Diagram for 12VGA Aux Speedometer Output Function

18.8.8. 12VGA Engine Waring Lamp - Wiring Diagram:

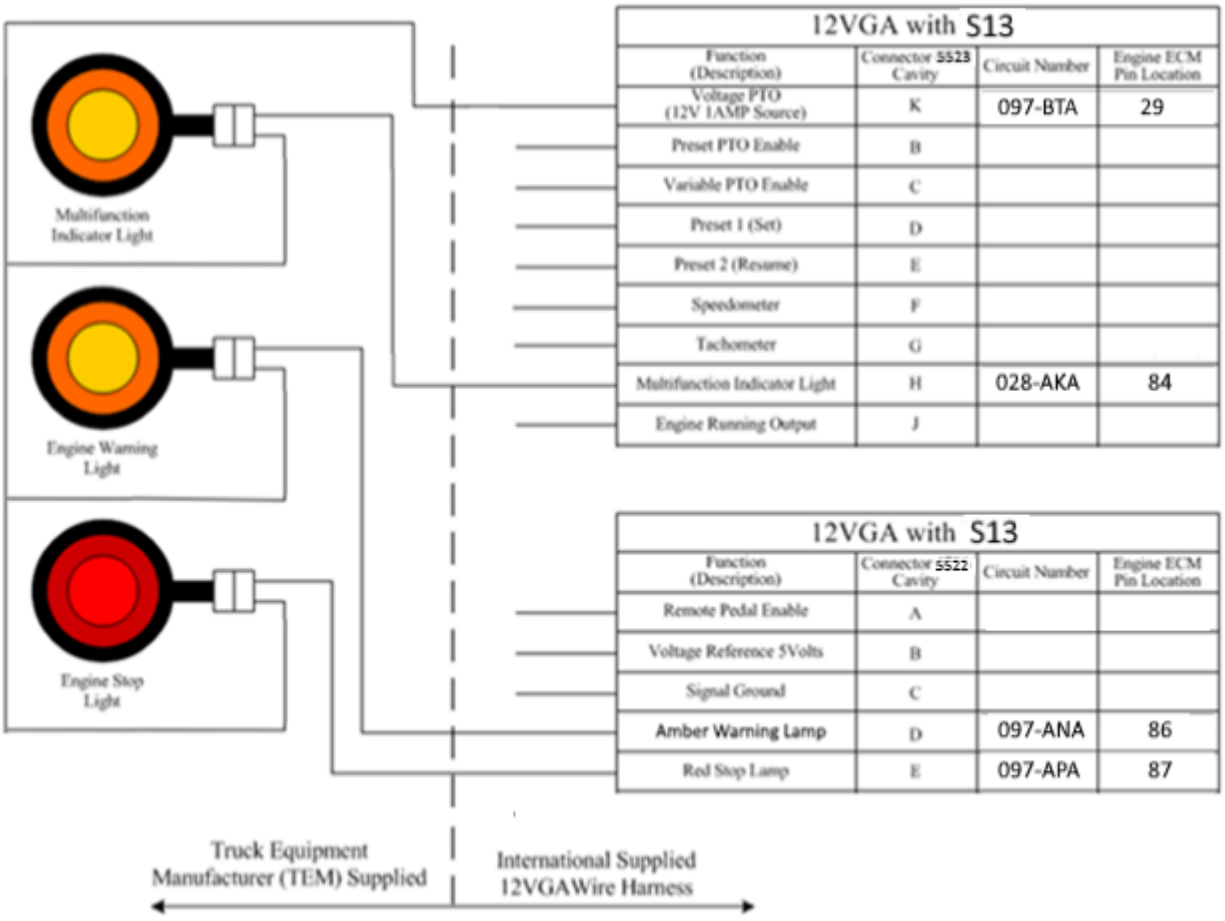

Wiring Diagram for 12VGA Engine Waring Lamp Function

Parts Associated with This Feature:

- **1928405063** **Bosch 94-pin connector**
- **192849255** **Bosch Tin-plated terminals**
- **192849056** **Bosch Tin-plated terminals 18 – 20 Gauge**
- **1928498057** **Bosch Tin-plated terminals**

PART NUMBER	DESCRIPTION
INTERNATIONAL® 94-WAY POWERTRAIN INTERFACE (PIM) CONNECTOR	
4241464C1	94-WAY PIM CONNECTOR BODY
4241465C1	WIRE TERMINAL 18-GUAGE (GOLD PLATED)
10-WAY CONNECTOR 5523 (BODY BUILDER CONNECTOR 1)	
3538634C1	10-WAY CONNECTOR BODY
3538636C1	10-WAY CONNECTOR LOCK
1667742C1	WIRE TERMINAL 18-GAUGE
3568570C1	WIRE TERMINAL SEAL 18-GAUGE
2025431C1	CONNECTOR CAVITY PLUG
10-WAY CONNECTOR 5522 (BODY BUILDER CONNECTOR 2)	
3538635C1	10-WAY CONNECTOR
3538636C1	10-WAY CONNECTOR LOCK
1661875C1	WIRE TERMINAL 18-GAUGE
3568570C1	WIRE TERMINAL SEAL 18-GAUGE
2025431C1	CONNECTOR CAVITY PLUG
Note: 5522 and 5523 are mating connectors. If you do not have the required mating connector for body builder connector one or two, order the parts for the other connector.	

- **Parts Associated with 12VGA Feature.**

How to Test This Feature:
This feature is tested by programming the Powertrain Interface Module (PIM) utilizing Service Diagnostic Solutions (SDS).

References:
Refer to the applicable International® Circuit Diagrams and Service Manuals.

18.9. 12VGA Pre 2022 Model Year A26: ENGINE CONTROL, REMOTE MOUNTED for AESC, for A26 Engines

Feature Applicability to Vehicle Platforms:

- Heavy Vocational (HV)
- Line Haul Transport (LT)
- Regional Haul (RH)
- Heavy Extreme (HX) 2021 and Newer

Extended Description: Feature 12VGA is for use with International® N13 and A26 engines. This feature provides two connectors for the Truck Equipment Manufacturer (TEM) or body builder to connect to the engine hardwired interface for remote engine speed control and monitoring. The connectors are located in the engine compartment on the driver side near the firewall and include the mating connectors with plugs for the installer to replace desired cavity locations with terminated body wiring. With the proper wiring and appropriate engine parameter settings, the body builder can remotely control preset, variable, and remote pedal engine speed. The feature also includes interface wires for Transfer Case Feedback, Engine Warning Light (EWL), Tachometer, Vehicle Speed Pulse and Oil in Water LIGHT (OWL).

Note: The pre 2022 model year A26 and post 2021 model year A26 engines have different pinouts at the 10 pin interface connectors. The post 2021 model year A26 AESC inputs need to see a **12-volt** signal to be activated. Engines can be identified by the connectors on the ECM.

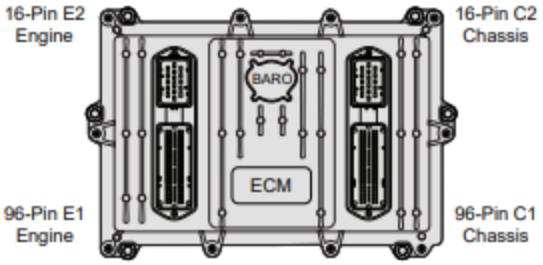

Pre 2022 Model Year ECM

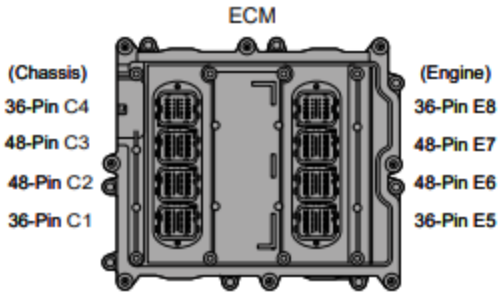

Post 2021 Model Year ECM

System Block Diagram:

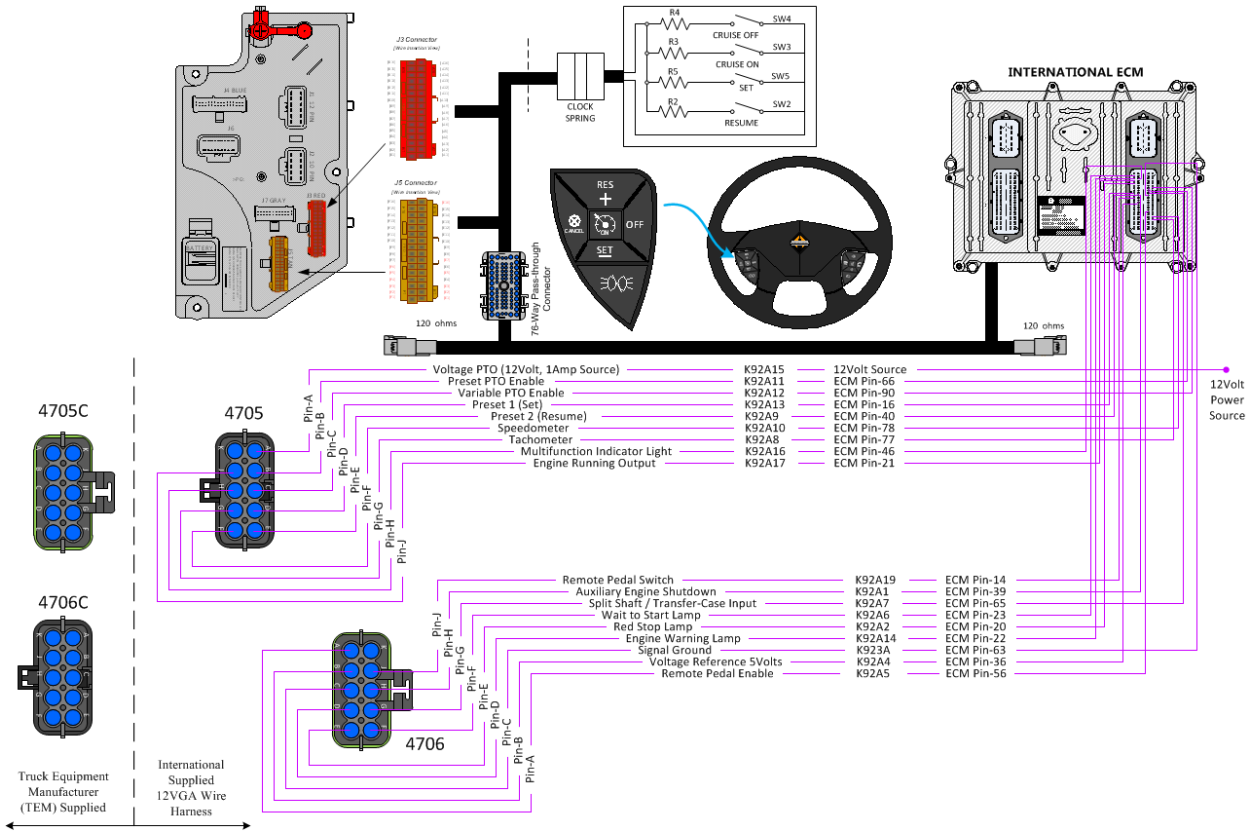

18.9.1. 12VGA Preset Set Speed - Wiring Diagram:

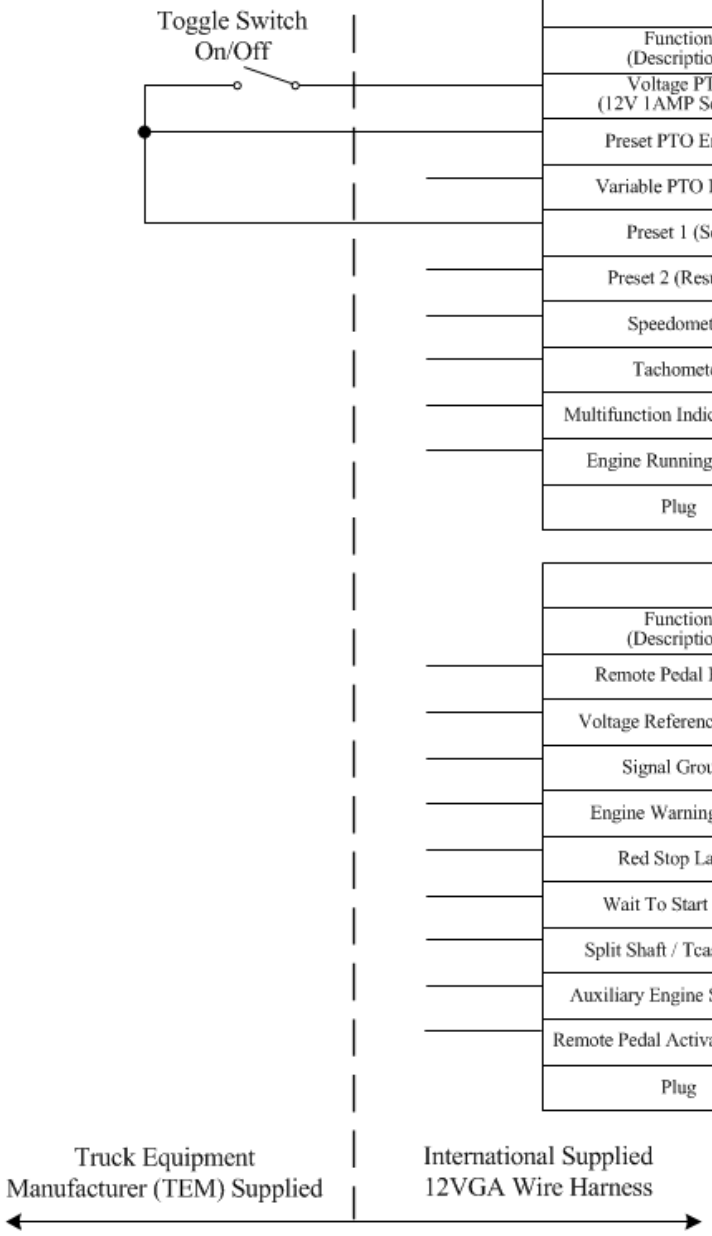

12VGA with N13/A26			
Function (Description)	Connector 4705 Cavity	Circuit Number	Engine ECM Pin Location
Voltage PTO (12V 1AMP Source)	A	K92A15	
Preset PTO Enable	B	K92A11	6019 (C1-66)
Variable PTO Enable	C	K92A12	6019 (C1-90)
Preset 1 (Set)	D	K92A13	6019 (C1-16)
Preset 2 (Resume)	E	K92A9	6019 (C1-40)
Speedometer	F	K92A10	6019 (C1-78)
Tachometer	G	K92A8	6019 (C1-77)
Multifunction Indicator Light	H	K92A16	6019 (C1-46)
Engine Running Output	J	K92A17	6019 (C1-21)
Plug	K		

12VGA with N13/A26			
Function (Description)	Connector 4706 Cavity	Circuit Number	Engine ECM Pin Location
Remote Pedal Enable	A	K92A5	6018 (C1-56)
Voltage Reference 5Volts	B	K92A4	6018 (C1-36)
Signal Ground	C	K92A3	6018 (C1-63)
Engine Warning Lamp	D	K92A14	6018 (C1-22
Red Stop Lamp	E	K92A2	6018 (C1-20)
Wait To Start Light	F	K92A6	6018 (C1-23)
Split Shaft / Tcase Input	G	K92A7	6018 (C1-65)
Auxiliary Engine Shutdown	H	K92A1	6019 (C1-39)
Remote Pedal Activation Switch	J	K92A19	6019 (C1-14)
Plug	K		

Wiring Diagram for 12VGA Preset Set Speed Function

18.9.2. 12VGA Preset Resume Speed - Wiring Diagram:

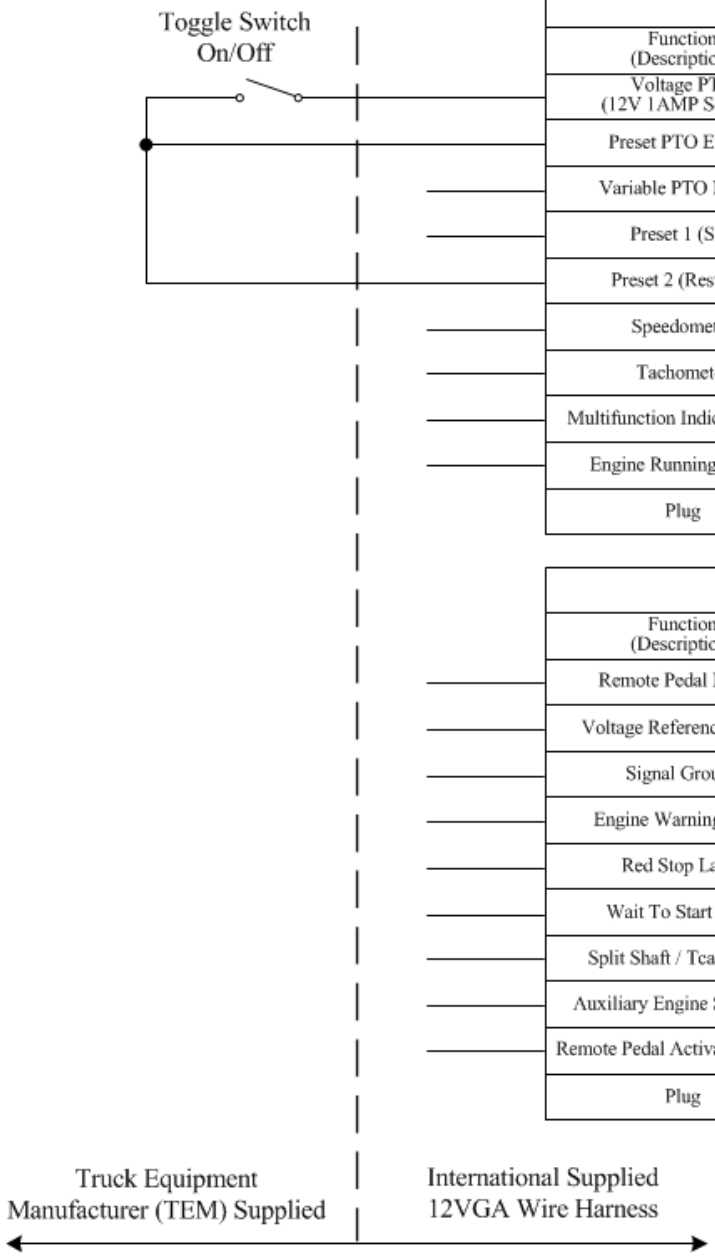

12VGA with N13/A26			
Function (Description)	Connector 4705 Cavity	Circuit Number	Engine ECM Pin Location
Voltage PTO (12V 1AMP Source)	A	K92A15	
Preset PTO Enable	B	K92A11	6019 (C1-66)
Variable PTO Enable	C	K92A12	6019 (C1-90)
Preset 1 (Set)	D	K92A13	6019 (C1-16)
Preset 2 (Resume)	E	K92A9	6019 (C1-40)
Speedometer	F	K92A10	6019 (C1-78)
Tachometer	G	K92A8	6019 (C1-77)
Multifunction Indicator Light	H	K92A16	6019 (C1-46)
Engine Running Output	J	K92A17	6019 (C1-21)
Plug	K		

12VGA with N13/A26			
Function (Description)	Connector 4706 Cavity	Circuit Number	Engine ECM Pin Location
Remote Pedal Enable	A	K92A5	6018 (C1-56)
Voltage Reference 5Volts	B	K92A4	6018 (C1-36)
Signal Ground	C	K92A3	6018 (C1-63)
Engine Warning Lamp	D	K92A14	6018 (C1-22
Red Stop Lamp	E	K92A2	6018 (C1-20)
Wait To Start Light	F	K92A6	6018 (C1-23)
Split Shaft / Tcase Input	G	K92A7	6018 (C1-65)
Auxiliary Engine Shutdown	H	K92A1	6019 (C1-39)
Remote Pedal Activation Switch	J	K92A19	6019 (C1-14)
Plug	K		

Wiring Diagram for 12VGA Preset Resume Speed Function

18.9.3. 12VGA Preset Set Resume Speed - Wiring Diagram:

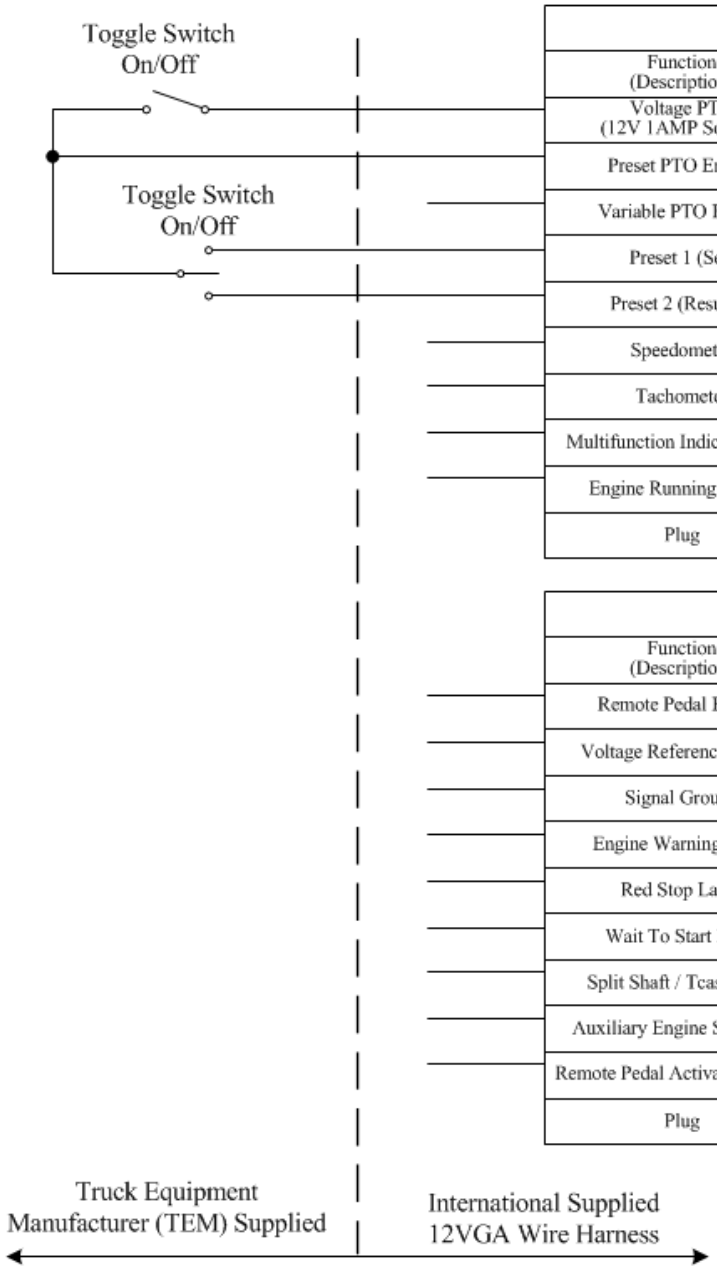

12VGA with N13/A26			
Function (Description)	Connector 4705 Cavity	Circuit Number	Engine ECM Pin Location
Voltage PTO (12V 1AMP Source)	A	K92A15	
Preset PTO Enable	B	K92A11	6019 (C1-66)
Variable PTO Enable	C	K92A12	6019 (C1-90)
Preset 1 (Set)	D	K92A13	6019 (C1-16)
Preset 2 (Resume)	E	K92A9	6019 (C1-40)
Speedometer	F	K92A10	6019 (C1-78)
Tachometer	G	K92A8	6019 (C1-77)
Multifunction Indicator Light	H	K92A16	6019 (C1-46)
Engine Running Output	J	K92A17	6019 (C1-21)
Plug	K		

12VGA with N13/A26			
Function (Description)	Connector 4706 Cavity	Circuit Number	Engine ECM Pin Location
Remote Pedal Enable	A	K92A5	6018 (C1-56)
Voltage Reference 5Volts	B	K92A4	6018 (C1-36)
Signal Ground	C	K92A3	6018 (C1-63)
Engine Warning Lamp	D	K92A14	6018 (C1-22
Red Stop Lamp	E	K92A2	6018 (C1-20)
Wait To Start Light	F	K92A6	6018 (C1-23)
Split Shaft / Tcase Input	G	K92A7	6018 (C1-65)
Auxiliary Engine Shutdown	H	K92A1	6019 (C1-39)
Remote Pedal Activation Switch	J	K92A19	6019 (C1-14)
Plug	K		

Wiring Diagram for 12VGA Preset Set Resume Speed Function

18.9.4. 12VGA Variable Switch Control - Wiring Diagram:

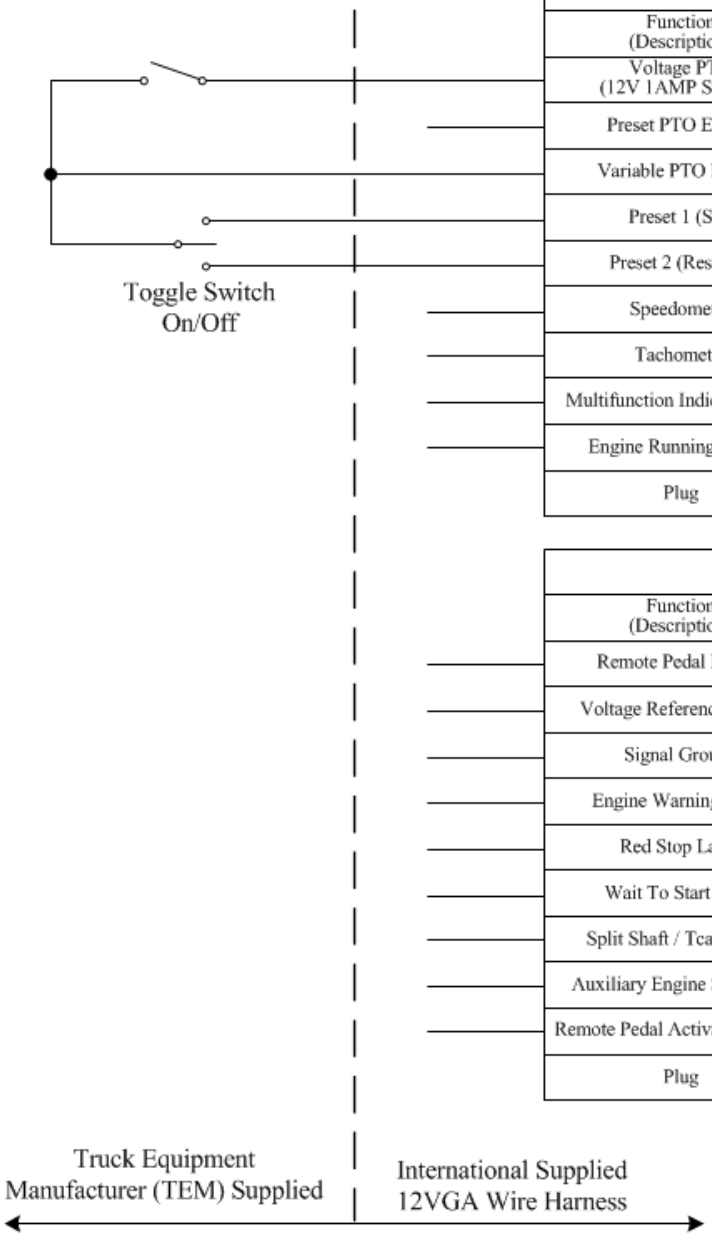

12VGA with N13/A26			
Function (Description)	Connector 4705 Cavity	Circuit Number	Engine ECM Pin Location
Voltage PTO (12V 1AMP Source)	A	K92A15	
Preset PTO Enable	B	K92A11	6019 (C1-66)
Variable PTO Enable	C	K92A12	6019 (C1-90)
Preset 1 (Set)	D	K92A13	6019 (C1-16)
Preset 2 (Resume)	E	K92A9	6019 (C1-40)
Speedometer	F	K92A10	6019 (C1-78)
Tachometer	G	K92A8	6019 (C1-77)
Multifunction Indicator Light	H	K92A16	6019 (C1-46)
Engine Running Output	J	K92A17	6019 (C1-21)
Plug	K		

12VGA with N13/A26			
Function (Description)	Connector 4706 Cavity	Circuit Number	Engine ECM Pin Location
Remote Pedal Enable	A	K92A5	6018 (C1-56)
Voltage Reference 5Volts	B	K92A4	6018 (C1-36)
Signal Ground	C	K92A3	6018 (C1-63)
Engine Warning Lamp	D	K92A14	6018 (C1-22
Red Stop Lamp	E	K92A2	6018 (C1-20)
Wait To Start Light	F	K92A6	6018 (C1-23)
Split Shaft / Tcase Input	G	K92A7	6018 (C1-65)
Auxiliary Engine Shutdown	H	K92A1	6019 (C1-39)
Remote Pedal Activation Switch	J	K92A19	6019 (C1-14)
Plug	K		

Wiring Diagram for 12VGA Variable Switch Control Function

18.9.5. 12VGA Variable Pedal Control - Wiring Diagram:

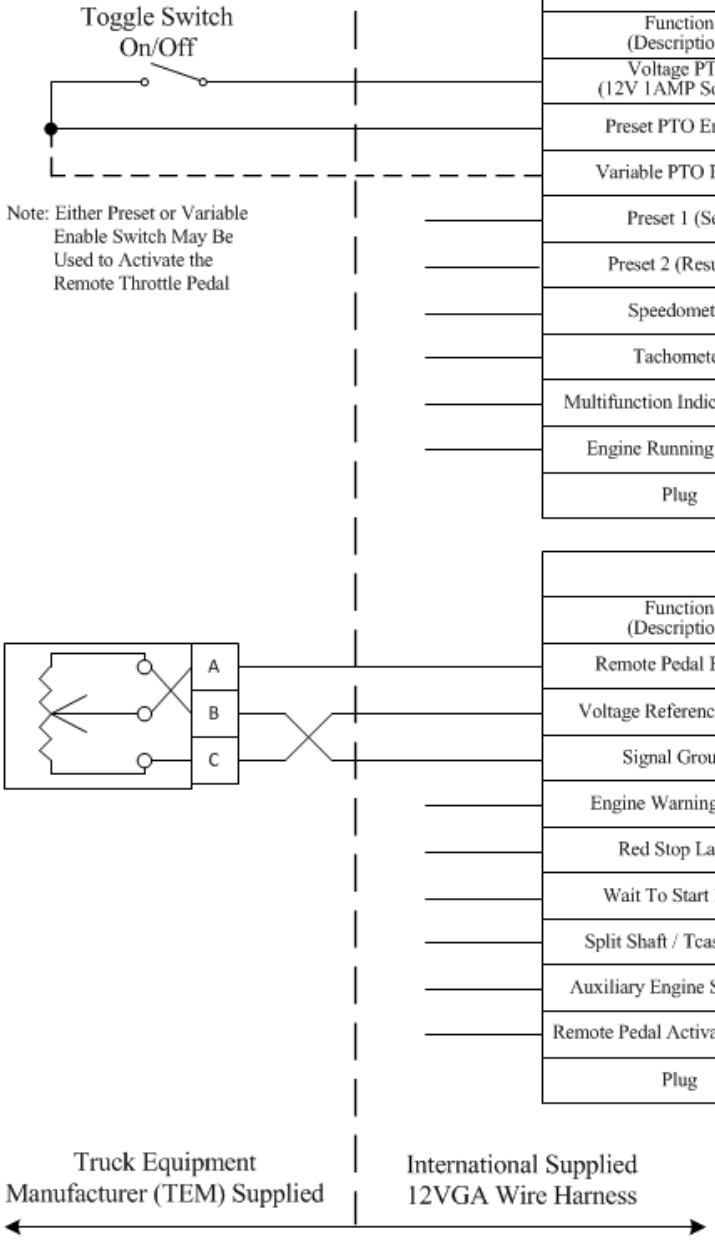

12VGA with N13/A26			
Function (Description)	Connector 4705 Cavity	Circuit Number	Engine ECM Pin Location
Voltage PTO (12V 1AMP Source)	A	K92A15	
Preset PTO Enable	B	K92A11	6019 (C1-66)
Variable PTO Enable	C	K92A12	6019 (C1-90)
Preset 1 (Set)	D	K92A13	6019 (C1-16)
Preset 2 (Resume)	E	K92A9	6019 (C1-40)
Speedometer	F	K92A10	6019 (C1-78)
Tachometer	G	K92A8	6019 (C1-77)
Multifunction Indicator Light	H	K92A16	6019 (C1-46)
Engine Running Output	J	K92A17	6019 (C1-21)
Plug	K		

12VGA with N13/A26			
Function (Description)	Connector 4706 Cavity	Circuit Number	Engine ECM Pin Location
Remote Pedal Enable	A	K92A5	6018 (C1-56)
Voltage Reference 5Volts	B	K92A4	6018 (C1-36)
Signal Ground	C	K92A3	6018 (C1-63)
Engine Warning Lamp	D	K92A14	6018 (C1-22
Red Stop Lamp	E	K92A2	6018 (C1-20)
Wait To Start Light	F	K92A6	6018 (C1-23)
Split Shaft / Tcase Input	G	K92A7	6018 (C1-65)
Auxiliary Engine Shutdown	H	K92A1	6019 (C1-39)
Remote Pedal Activation Switch	J	K92A19	6019 (C1-14)
Plug	K		

Wiring Diagram for 12VGA Variable Pedal Control Function

18.9.6. 12VGA Transfer Case Speed Disable - Wiring Diagram:

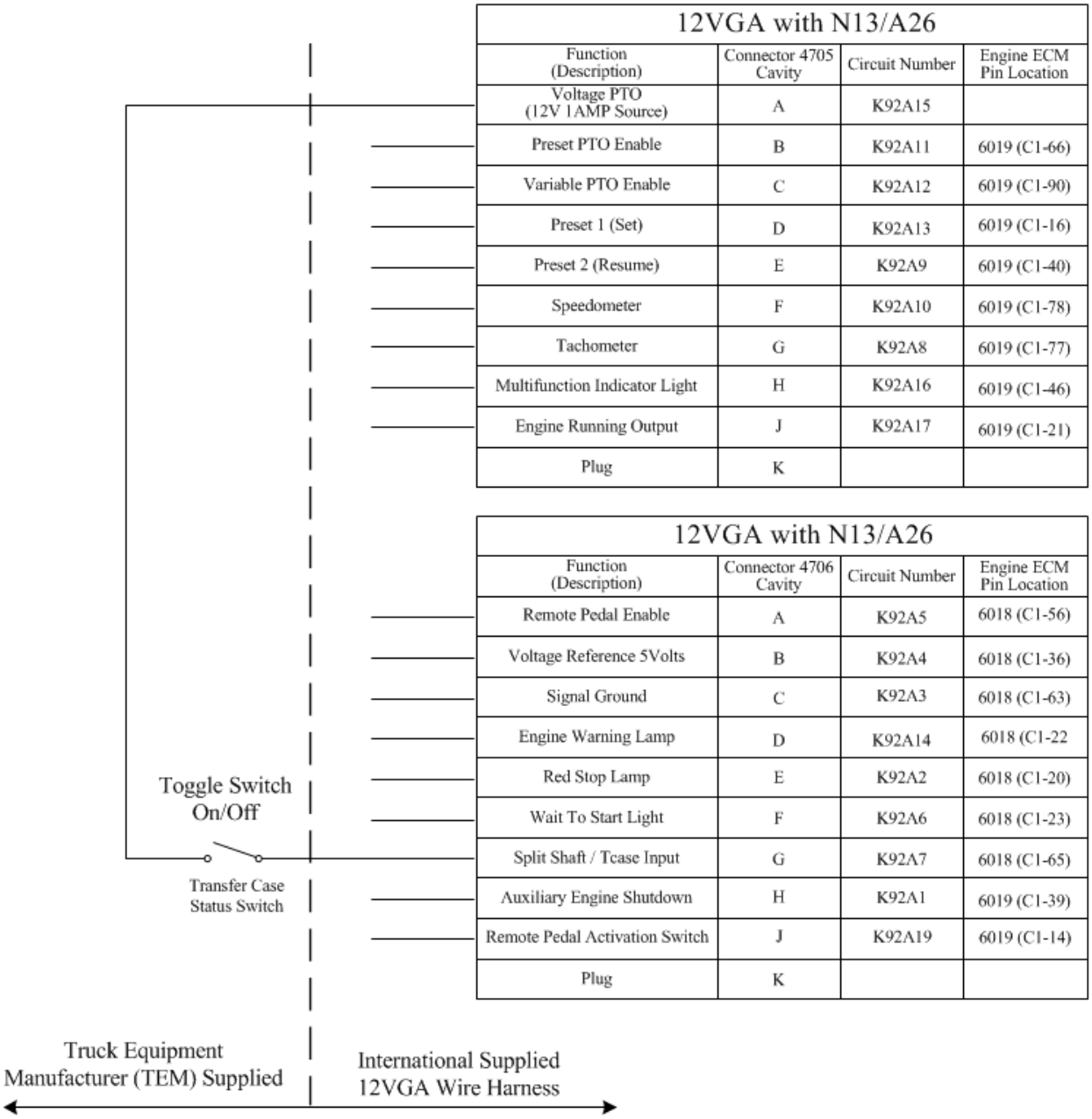

12VGA with N13/A26			
Function (Description)	Connector 4705 Cavity	Circuit Number	Engine ECM Pin Location
Voltage PTO (12V 1AMP Source)	A	K92A15	
Preset PTO Enable	B	K92A11	6019 (C1-66)
Variable PTO Enable	C	K92A12	6019 (C1-90)
Preset 1 (Set)	D	K92A13	6019 (C1-16)
Preset 2 (Resume)	E	K92A9	6019 (C1-40)
Speedometer	F	K92A10	6019 (C1-78)
Tachometer	G	K92A8	6019 (C1-77)
Multifunction Indicator Light	H	K92A16	6019 (C1-46)
Engine Running Output	J	K92A17	6019 (C1-21)
Plug	K		

12VGA with N13/A26			
Function (Description)	Connector 4706 Cavity	Circuit Number	Engine ECM Pin Location
Remote Pedal Enable	A	K92A5	6018 (C1-56)
Voltage Reference 5Volts	B	K92A4	6018 (C1-36)
Signal Ground	C	K92A3	6018 (C1-63)
Engine Warning Lamp	D	K92A14	6018 (C1-22
Red Stop Lamp	E	K92A2	6018 (C1-20)
Wait To Start Light	F	K92A6	6018 (C1-23)
Split Shaft / Tcase Input	G	K92A7	6018 (C1-65)
Auxiliary Engine Shutdown	H	K92A1	6019 (C1-39)
Remote Pedal Activation Switch	J	K92A19	6019 (C1-14)
Plug	K		

Wiring Diagram for 12VGA Transfer Case Speed Disable Function

18.9.7. 12VGA Aux Tachometer Output - Wiring Diagram:

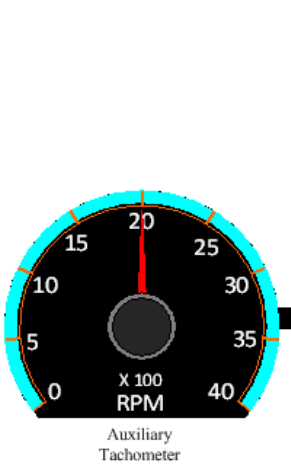

12VGA with N13/A26			
Function (Description)	Connector 4705 Cavity	Circuit Number	Engine ECM Pin Location
Voltage PTO (12V 1AMP Source)	A	K92A15	
Preset PTO Enable	B	K92A11	6019 (C1-66)
Variable PTO Enable	C	K92A12	6019 (C1-90)
Preset 1 (Set)	D	K92A13	6019 (C1-16)
Preset 2 (Resume)	E	K92A9	6019 (C1-40)
Speedometer	F	K92A10	6019 (C1-78)
Tachometer	G	K92A8	6019 (C1-77)
Multifunction Indicator Light	H	K92A16	6019 (C1-46)
Engine Running Output	J	K92A17	6019 (C1-21)
Plug	K		

12VGA with N13/A26			
Function (Description)	Connector 4706 Cavity	Circuit Number	Engine ECM Pin Location
Remote Pedal Enable	A	K92A5	6018 (C1-56)
Voltage Reference 5Volts	B	K92A4	6018 (C1-36)
Signal Ground	C	K92A3	6018 (C1-63)
Engine Warning Lamp	D	K92A14	6018 (C1-22
Red Stop Lamp	E	K92A2	6018 (C1-20)
Wait To Start Light	F	K92A6	6018 (C1-23)
Split Shaft / Tcase Input	G	K92A7	6018 (C1-65)
Auxiliary Engine Shutdown	H	K92A1	6019 (C1-39)
Remote Pedal Activation Switch	J	K92A19	6019 (C1-14)
Plug	K		

Wiring Diagram for 12VGA Aux Tachometer Output Function

18.9.8. 12VGA Aux Speedometer Output - Wiring Diagram:



Auxiliary Speedometer

12volt Power Source

Transfer Case Status Switch

12VGA with N13/A26			
Function (Description)	Connector 4705 Cavity	Circuit Number	Engine ECM Pin Location
Voltage PTO (12V 1AMP Source)	A	K92A15	
Preset PTO Enable	B	K92A11	6019 (C1-66)
Variable PTO Enable	C	K92A12	6019 (C1-90)
Preset 1 (Set)	D	K92A13	6019 (C1-16)
Preset 2 (Resume)	E	K92A9	6019 (C1-40)
Speedometer	F	K92A10	6019 (C1-78)
Tachometer	G	K92A8	6019 (C1-77)
Multifunction Indicator Light	H	K92A16	6019 (C1-46)
Engine Running Output	J	K92A17	6019 (C1-21)
Plug	K		

12VGA with N13/A26			
Function (Description)	Connector 4706 Cavity	Circuit Number	Engine ECM Pin Location
Remote Pedal Enable	A	K92A5	6018 (C1-56)
Voltage Reference 5Volts	B	K92A4	6018 (C1-36)
Signal Ground	C	K92A3	6018 (C1-63)
Engine Warning Lamp	D	K92A14	6018 (C1-22
Red Stop Lamp	E	K92A2	6018 (C1-20)
Wait To Start Light	F	K92A6	6018 (C1-23)
Split Shaft / Tcase Input	G	K92A7	6018 (C1-65)
Auxiliary Engine Shutdown	H	K92A1	6019 (C1-39)
Remote Pedal Activation Switch	J	K92A19	6019 (C1-14)
Plug	K		

Truck Equipment Manufacturer (TEM) Supplied

International Supplied 12VGA Wire Harness

Wiring Diagram for 12VGA Aux Speedometer Output Function

18.9.9. 12VGA Engine Waring Lamp - Wiring Diagram:

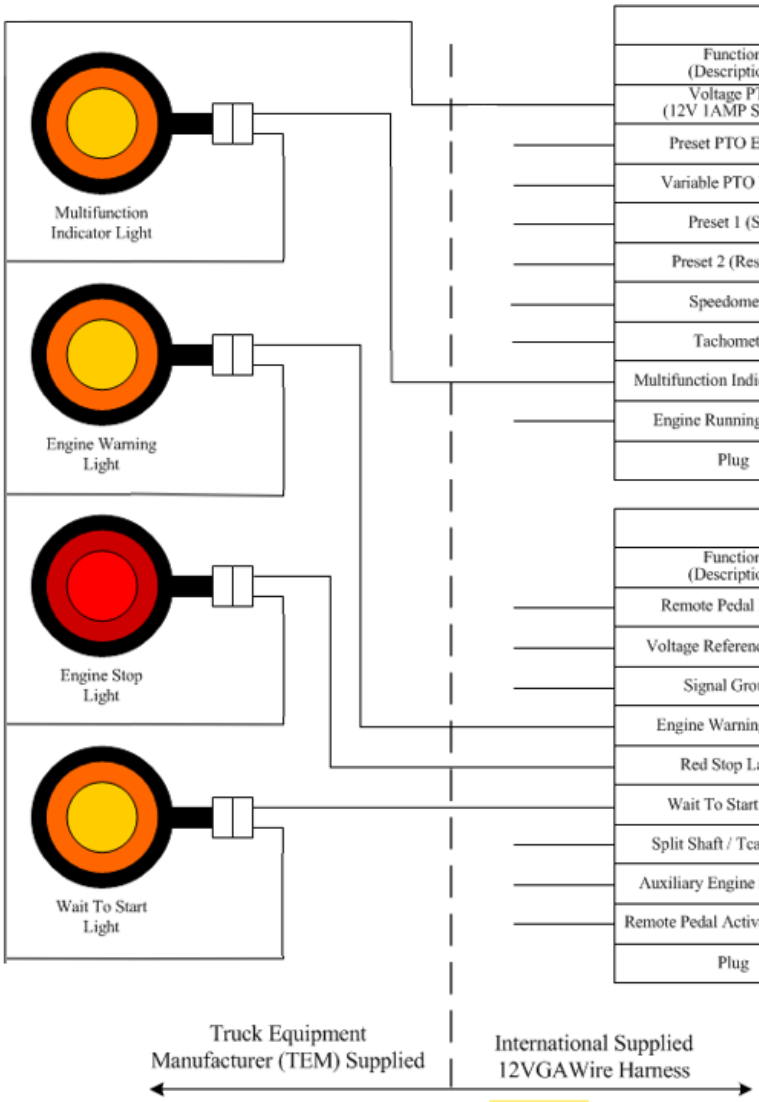

12VGA with N13/A26			
Function (Description)	Connector 4705 Cavity	Circuit Number	Engine ECM Pin Location
Voltage PTO (12V 1AMP Source)	A	K92A15	6019 (C1-25
Preset PTO Enable	B	K92A11	6019 (C1-66)
Variable PTO Enable	C	K92A12	6019 (C1-90)
Preset 1 (Set)	D	K92A13	6019 (C1-16)
Preset 2 (Resume)	E	K92A9	6019 (C1-40)
Speedometer	F	K92A10	6019 (C1-78)
Tachometer	G	K92A8	6019 (C1-77)
Multifunction Indicator Light	H	K92A16	6019 (C1-46)
Engine Running Output	J	K92A17	6019 (C1-21)
Plug	K		

12VGA with N13/A26			
Function (Description)	Connector 4706 Cavity	Circuit Number	Engine ECM Pin Location
Remote Pedal Enable	A	K92A5	6018 (C1-56)
Voltage Reference 5Volts	B	K92A4	6018 (C1-36)
Signal Ground	C	K92A3	6018 (C1-63)
Engine Warning Lamp	D	K92A14	6018 (C1-22
Red Stop Lamp	E	K92A2	6018 (C1-20)
Wait To Start Light	F	K92A6	6018 (C1-23)
Split Shaft / Tcase Input	G	K92A7	6018 (C1-65)
Auxiliary Engine Shutdown	H	K92A1	6019 (C1-39)
Remote Pedal Activation Switch	J	K92A19	6019 (C1-14)
Plug	K		

Wiring Diagram for 12VGA Engine Waring Lamp Function

Parts Associated with This Feature:

PART NUMBER	DESCRIPTION
INTERNATIONAL® 96-WAY CONNECTOR ENGINE CONTROLLER	
3952655C1	96-WAY ECM CONNECTOR BODY
3687804C1	WIRE TERMINAL 20-GUAGE (GOLD PLATED)
10-WAY CONNECTOR 4705 (BODY BUILDER CONNECTOR 1)	
3538634C1	10-WAY CONNECTOR BODY
3538636C1	10-WAY CONNECTOR LOCK
1667742C1	WIRE TERMINAL 18-GAUGE
3568570C1	WIRE TERMINAL SEAL 18-GAUGE
2025431C1	CONNECTOR CAVITY PLUG
10-WAY CONNECTOR 4706 (BODY BUILDER CONNECTOR 2)	
3538635C1	10-WAY CONNECTOR
3538636C1	10-WAY CONNECTOR LOCK
1661875C1	WIRE TERMINAL 18-GAUGE
3568570C1	WIRE TERMINAL SEAL 18-GAUGE
2025431C1	CONNECTOR CAVITY PLUG
Note: 4705 and 4706 are mating connectors. If you do not have the required mating connector for body builder connector one or two, order the parts for the other connector.	

Parts Associated with 12VGA Feature.

How to Test This Feature:
This feature is tested by programming the Engine Control Module (ECM) utilizing International Service Diagnostic Solutions (SDS).

References:
Refer to the applicable International® Circuit Diagrams and Service Manuals.

18.10. 12VGA Post 2021 Model Year A26: ENGINE CONTROL, REMOTE MOUNTED for AESC, for A26 Engines

Feature Applicability to Vehicle Platforms:

- Heavy Vocational (HV)
- Line Haul Transport (LT)
- Regional Haul (RH)
- Heavy Extreme (HX) 2021 and Newer

Extended Description: Feature 12VGA is for use with A26 engines. This feature provides two connectors for the Truck Equipment Manufacturer (TEM) or body builder to connect to the engine hardwired interface for remote engine speed control and monitoring. The connectors are located in the engine compartment on the driver side near the firewall and include the mating connectors with plugs for the installer to replace desired cavity locations with terminated body wiring. With the proper wiring and appropriate engine parameter settings, the body builder can remotely control preset, variable, and remote pedal engine speed. The feature also includes interface wires for Transfer Case Feedback, Engine Warning Light (EWL), Tachometer, Vehicle Speed Pulse and Oil in Water LIGHT (OWL).

Note: The pre 2022 model year A26 and post 2021 model year A26 engines have different pinouts at the 10 pin interface connectors. The post 2021 model year A26 AESC inputs need to see a **ground** signal to be activated. Engines can be identified by the connectors on the ECM.

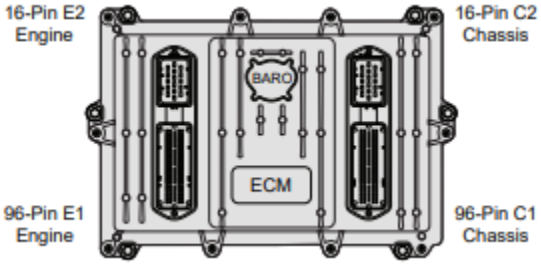

Pre 2022 Model Year ECM

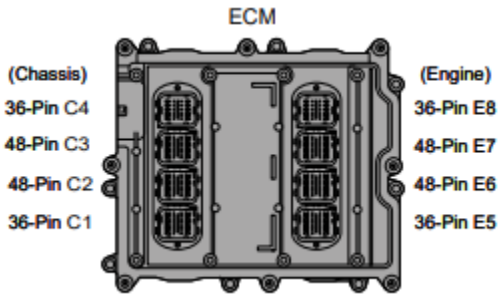

Post 2021 Model Year ECM

System Block Diagram:

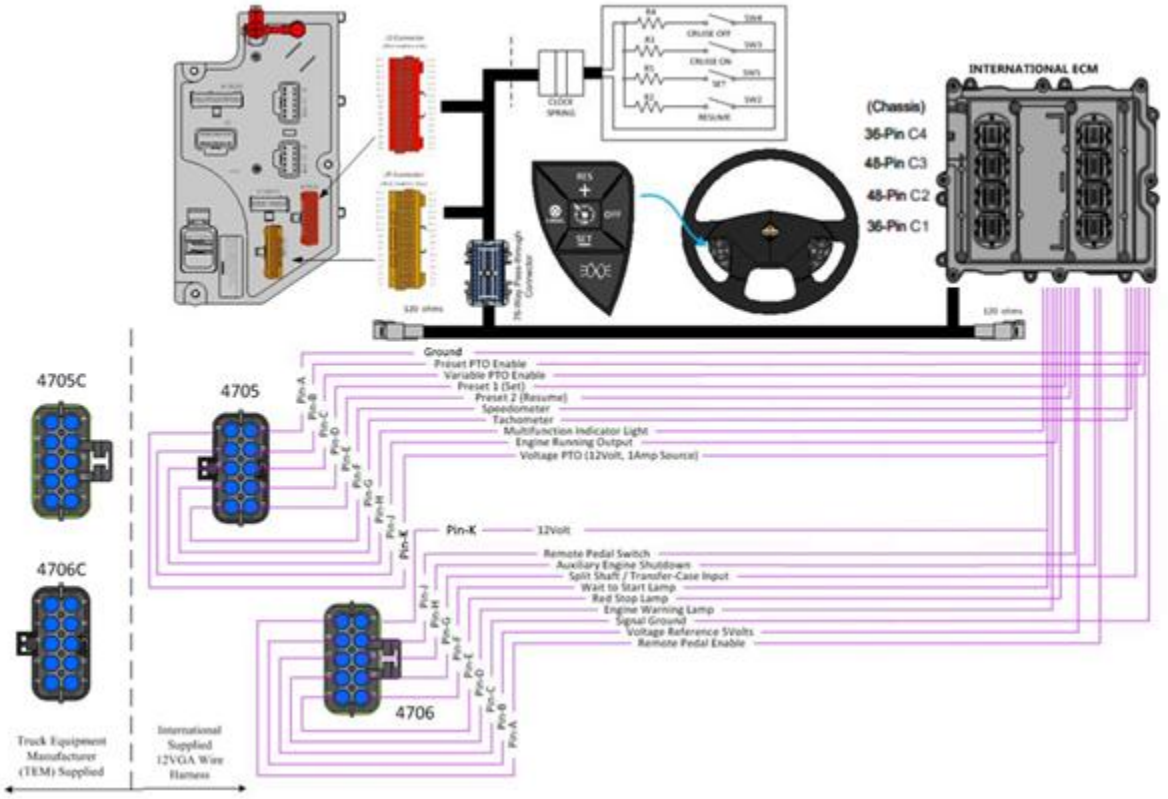

18.10.1. 12VGA Preset Set Speed - Wiring Diagram:

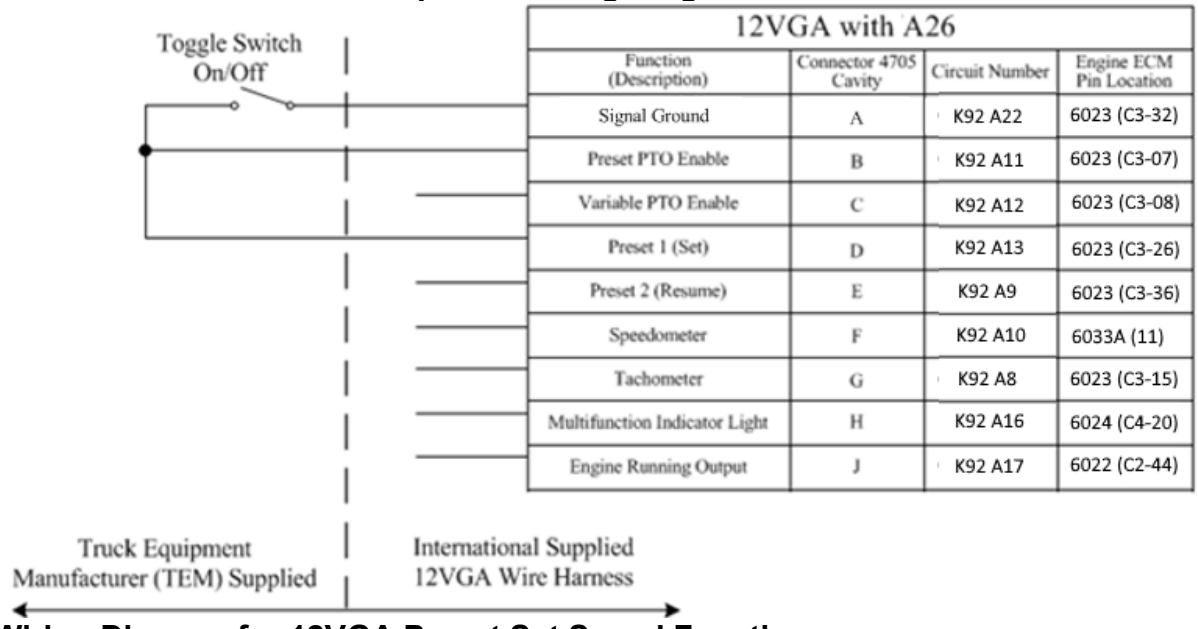

12VGA with A26			
Function (Description)	Connector 4705 Cavity	Circuit Number	Engine ECM Pin Location
Signal Ground	A	K92 A22	6023 (C3-32)
Preset PTO Enable	B	K92 A11	6023 (C3-07)
Variable PTO Enable	C	K92 A12	6023 (C3-08)
Preset 1 (Set)	D	K92 A13	6023 (C3-26)
Preset 2 (Resume)	E	K92 A9	6023 (C3-36)
Speedometer	F	K92 A10	6033A (11)
Tachometer	G	K92 A8	6023 (C3-15)
Multifunction Indicator Light	H	K92 A16	6024 (C4-20)
Engine Running Output	J	K92 A17	6022 (C2-44)

Wiring Diagram for 12VGA Preset Set Speed Function

18.10.2. 12VGA Preset Resume Speed - Wiring Diagram:

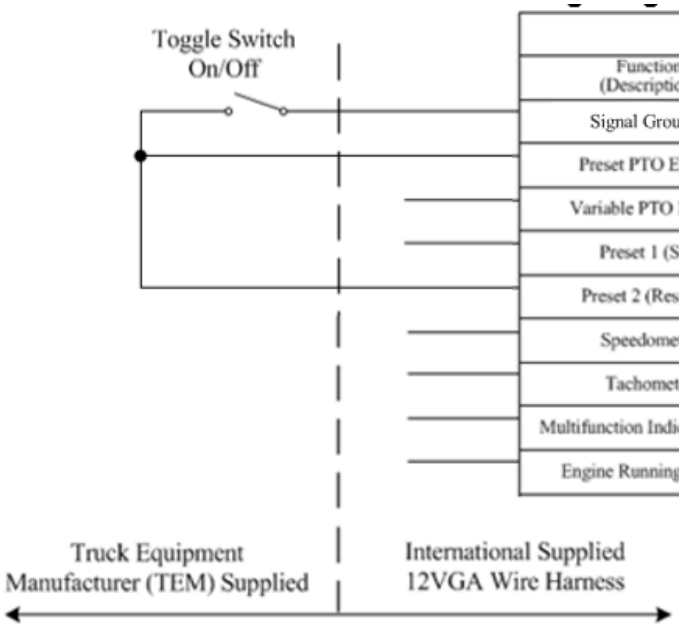

12VGA with A26			
Function (Description)	Connector 4705 Cavity	Circuit Number	Engine ECM Pin Location
Signal Ground	A	K92 A22	6023 (C3-32)
Preset PTO Enable	B	K92 A11	6023 (C3-07)
Variable PTO Enable	C	K92 A12	6023 (C3-08)
Preset 1 (Set)	D	K92 A13	6023 (C3-26)
Preset 2 (Resume)	E	K92 A9	6023 (C3-36)
Speedometer	F	K92 A10	6033A (11)
Tachometer	G	K92 A8	6023 (C3-15)
Multifunction Indicator Light	H	K92 A16	6024 (C4-20)
Engine Running Output	J	K92 A17	6022 (C2-44)

Wiring Diagram for 12VGA Preset Resume Speed Function

18.10.3. 12VGA Preset Set Resume Speed - Wiring Diagram:

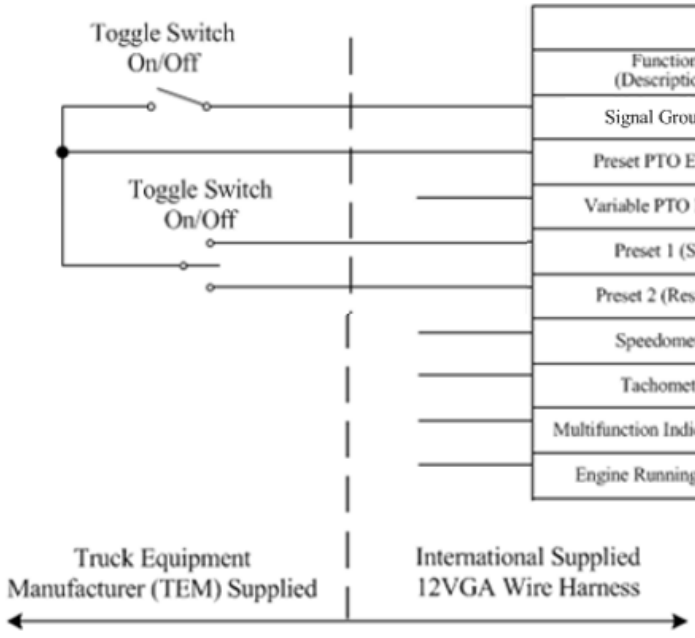

12VGA with A26			
Function (Description)	Connector 4705 Cavity	Circuit Number	Engine ECM Pin Location
Signal Ground	A	K92 A22	6023 (C3-32)
Preset PTO Enable	B	K92 A11	6023 (C3-07)
Variable PTO Enable	C	K92 A12	6023 (C3-08)
Preset 1 (Set)	D	K92 A13	6023 (C3-26)
Preset 2 (Resume)	E	K92 A9	6023 (C3-36)
Speedometer	F	K92 A10	6033A (11)
Tachometer	G	K92 A8	6023 (C3-15)
Multifunction Indicator Light	H	K92 A16	6024 (C4-20)
Engine Running Output	J	K92 A17	6022 (C2-44)

Wiring Diagram for 12VGA Preset Set Resume Speed Function

18.10.4. 12VGA Variable Switch Control - Wiring Diagram:

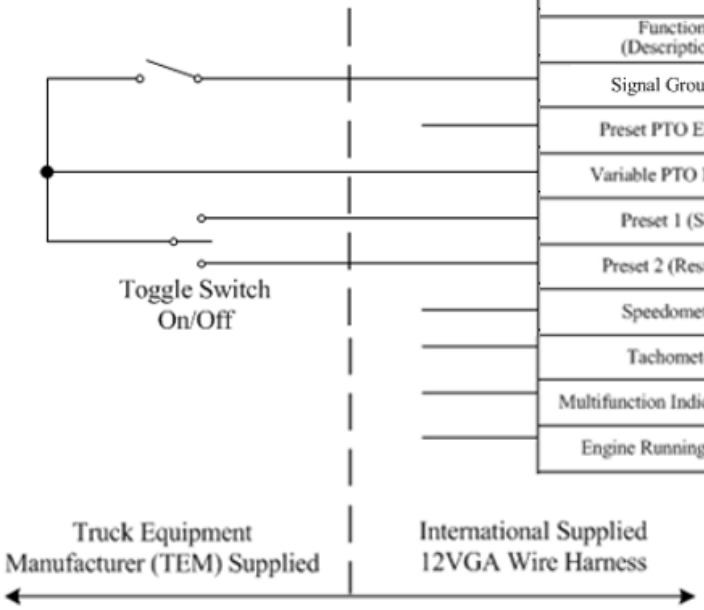

12VGA with A26			
Function (Description)	Connector 4705 Cavity	Circuit Number	Engine ECM Pin Location
Signal Ground	A	K92 A22	6023 (C3-32)
Preset PTO Enable	B	K92 A11	6023 (C3-07)
Variable PTO Enable	C	K92 A12	6023 (C3-08)
Preset 1 (Set)	D	K92 A13	6023 (C3-26)
Preset 2 (Resume)	E	K92 A9	6023 (C3-36)
Speedometer	F	K92 A10	6033A (11)
Tachometer	G	K92 A8	6023 (C3-15)
Multifunction Indicator Light	H	K92 A16	6024 (C4-20)
Engine Running Output	J	K92 A17	6022 (C2-44)

Wiring Diagram for 12VGA Variable Switch Control Function

18.10.5. 12VGA Variable Pedal Control - Wiring Diagram:

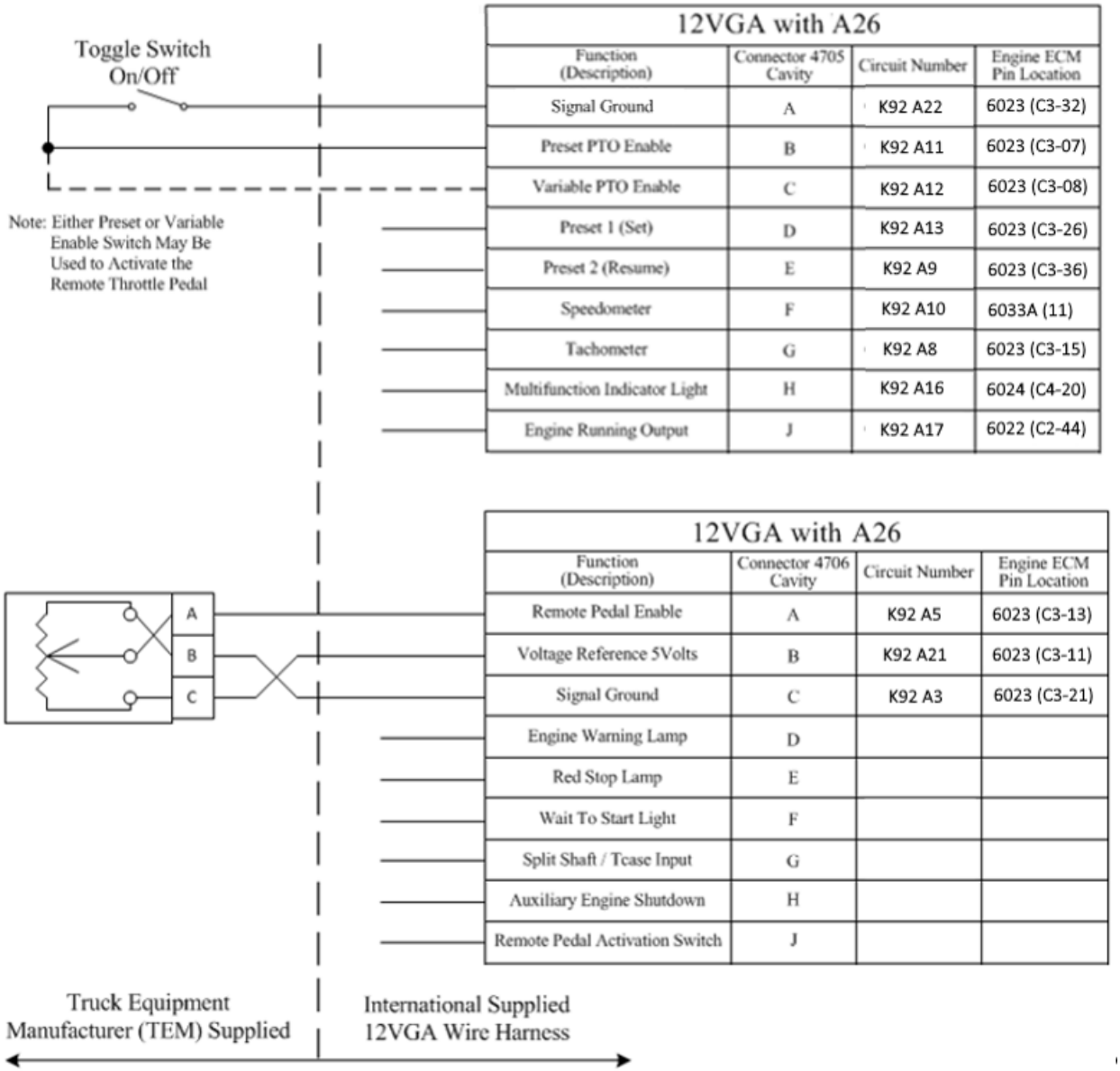

12VGA with A26			
Function (Description)	Connector 4705 Cavity	Circuit Number	Engine ECM Pin Location
Signal Ground	A	K92 A22	6023 (C3-32)
Preset PTO Enable	B	K92 A11	6023 (C3-07)
Variable PTO Enable	C	K92 A12	6023 (C3-08)
Preset 1 (Set)	D	K92 A13	6023 (C3-26)
Preset 2 (Resume)	E	K92 A9	6023 (C3-36)
Speedometer	F	K92 A10	6033A (11)
Tachometer	G	K92 A8	6023 (C3-15)
Multifunction Indicator Light	H	K92 A16	6024 (C4-20)
Engine Running Output	J	K92 A17	6022 (C2-44)

12VGA with A26			
Function (Description)	Connector 4706 Cavity	Circuit Number	Engine ECM Pin Location
Remote Pedal Enable	A	K92 A5	6023 (C3-13)
Voltage Reference 5Volts	B	K92 A21	6023 (C3-11)
Signal Ground	C	K92 A3	6023 (C3-21)
Engine Warning Lamp	D		
Red Stop Lamp	E		
Wait To Start Light	F		
Split Shaft / Tcase Input	G		
Auxiliary Engine Shutdown	H		
Remote Pedal Activation Switch	J		

Wiring Diagram for 12VGA Variable Pedal Control Function

18.10.6. 12VGA Transfer Case (Split Shaft) Speed Disable - Wiring Diagram:

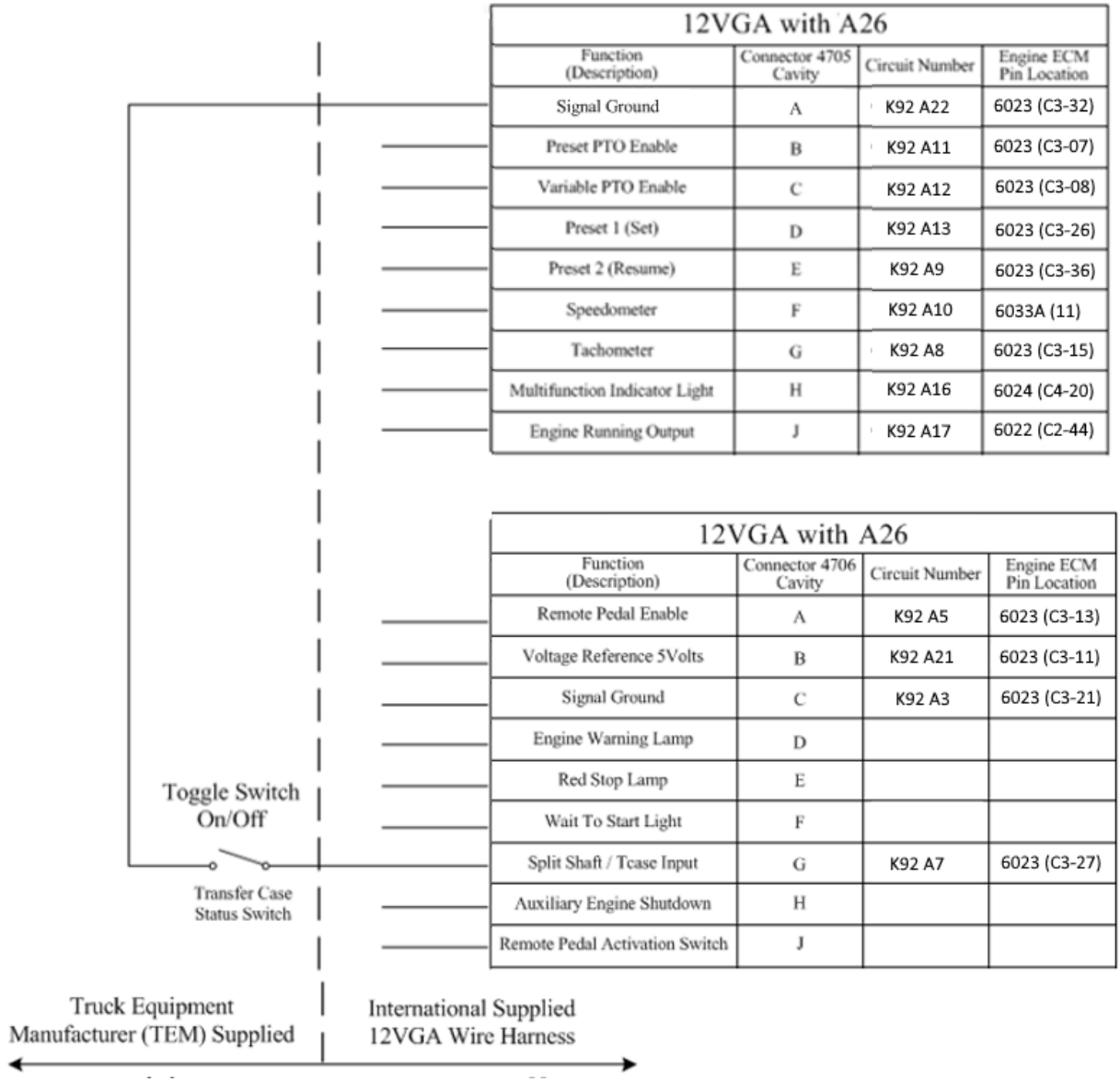

12VGA with A26			
Function (Description)	Connector 4705 Cavity	Circuit Number	Engine ECM Pin Location
Signal Ground	A	K92 A22	6023 (C3-32)
Preset PTO Enable	B	K92 A11	6023 (C3-07)
Variable PTO Enable	C	K92 A12	6023 (C3-08)
Preset 1 (Set)	D	K92 A13	6023 (C3-26)
Preset 2 (Resume)	E	K92 A9	6023 (C3-36)
Speedometer	F	K92 A10	6033A (11)
Tachometer	G	K92 A8	6023 (C3-15)
Multifunction Indicator Light	H	K92 A16	6024 (C4-20)
Engine Running Output	J	K92 A17	6022 (C2-44)

12VGA with A26			
Function (Description)	Connector 4706 Cavity	Circuit Number	Engine ECM Pin Location
Remote Pedal Enable	A	K92 A5	6023 (C3-13)
Voltage Reference 5Volts	B	K92 A21	6023 (C3-11)
Signal Ground	C	K92 A3	6023 (C3-21)
Engine Warning Lamp	D		
Red Stop Lamp	E		
Wait To Start Light	F		
Split Shaft / Tcase Input	G	K92 A7	6023 (C3-27)
Auxiliary Engine Shutdown	H		
Remote Pedal Activation Switch	J		

Wiring Diagram for 12VGA Transfer Case (Split Shaft) Speed Disable Function

18.10.7. 12VGA Aux Tachometer Output - Wiring Diagram:

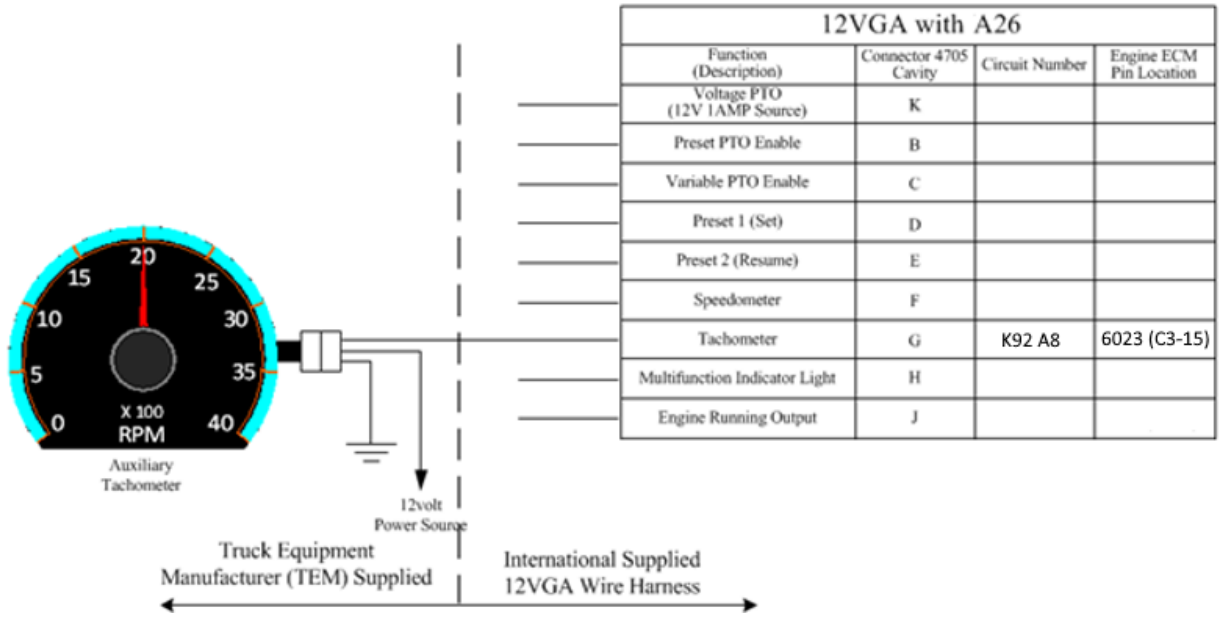

12VGA with A26			
Function (Description)	Connector 4705 Cavity	Circuit Number	Engine ECM Pin Location
Voltage PTO (12V 1AMP Source)	K		
Preset PTO Enable	B		
Variable PTO Enable	C		
Preset 1 (Set)	D		
Preset 2 (Resume)	E		
Speedometer	F		
Tachometer	G	K92 A8	6023 (C3-15)
Multifunction Indicator Light	H		
Engine Running Output	J		

Wiring Diagram for 12VGA Aux Tachometer Output Function

18.10.8. 12VGA Aux Speedometer Output - Wiring Diagram:

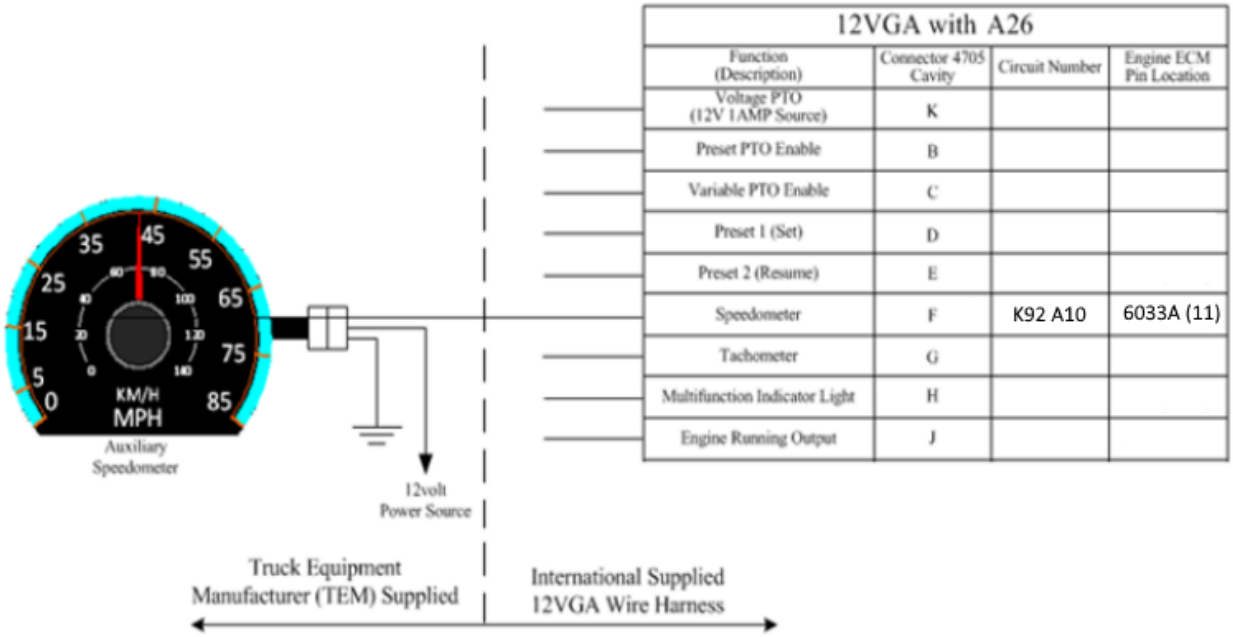

12VGA with A26			
Function (Description)	Connector 4705 Cavity	Circuit Number	Engine ECM Pin Location
Voltage PTO (12V 1AMP Source)	K		
Preset PTO Enable	B		
Variable PTO Enable	C		
Preset 1 (Set)	D		
Preset 2 (Resume)	E		
Speedometer	F	K92 A10	6033A (11)
Tachometer	G		
Multifunction Indicator Light	H		
Engine Running Output	J		

Wiring Diagram for 12VGA Aux Speedometer Output Function

18.10.9. 12VGA Engine Waring Lamp - Wiring Diagram:

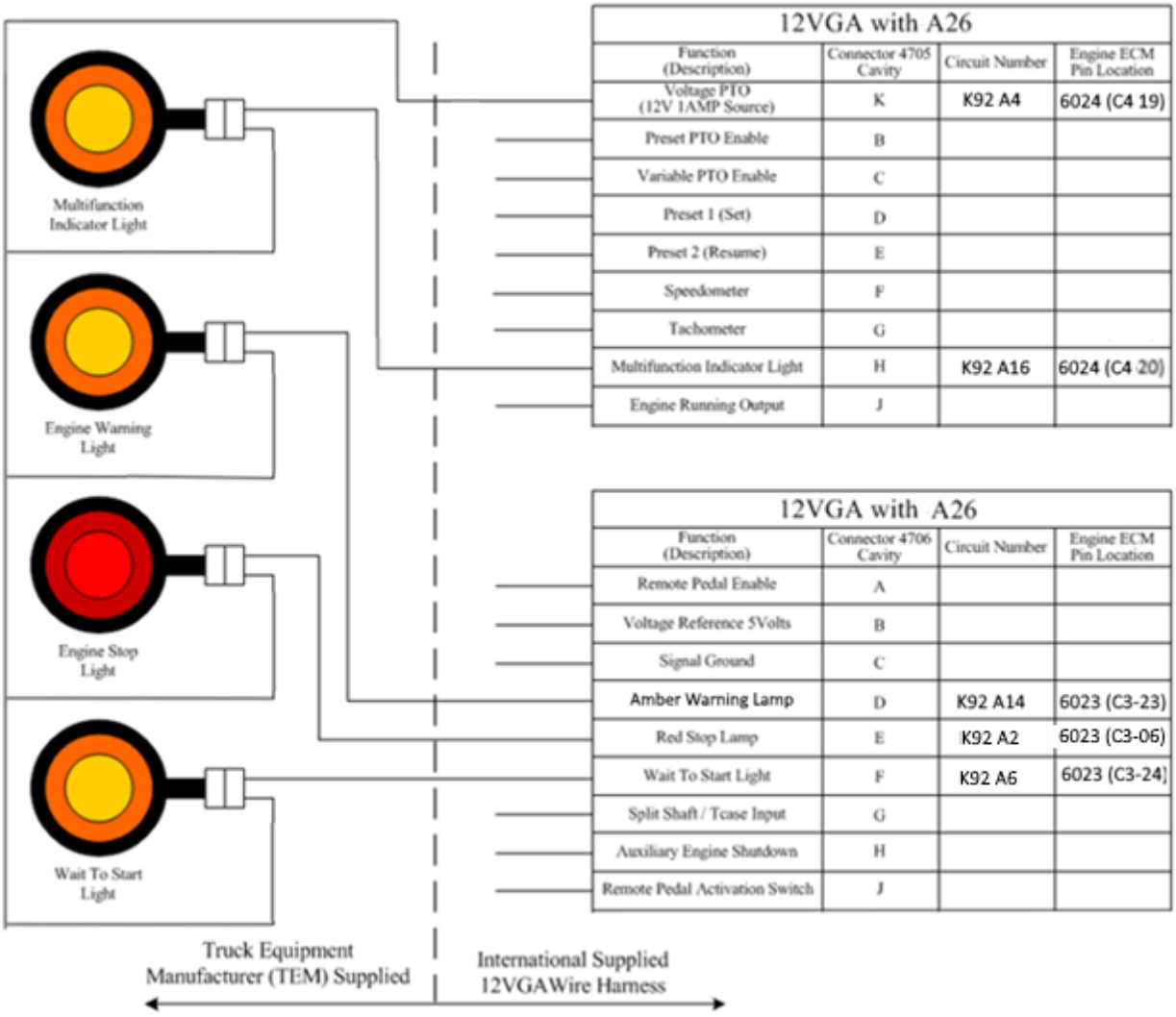

12VGA with A26

Function (Description)	Connector 4705 Cavity	Circuit Number	Engine ECM Pin Location
Voltage PTO (12V 1AMP Source)	K	K92 A4	6024 (C4 19)
Preset PTO Enable	B		
Variable PTO Enable	C		
Preset 1 (Set)	D		
Preset 2 (Resume)	E		
Speedometer	F		
Tachometer	G		
Multifunction Indicator Light	H	K92 A16	6024 (C4 20)
Engine Running Output	J		

12VGA with A26

Function (Description)	Connector 4706 Cavity	Circuit Number	Engine ECM Pin Location
Remote Pedal Enable	A		
Voltage Reference 5Volts	B		
Signal Ground	C		
Amber Warning Lamp	D	K92 A14	6023 (C3-23)
Red Stop Lamp	E	K92 A2	6023 (C3-06)
Wait To Start Light	F	K92 A6	6023 (C3-24)
Split Shaft / Tcase Input	G		
Auxiliary Engine Shutdown	H		
Remote Pedal Activation Switch	J		

Wiring Diagram for 12VGA Engine Waring Lamp Function

Parts Associated with This Feature:

PART NUMBER	DESCRIPTION
C2 INTERNATIONAL® 48-WAY CONNECTOR ENGINE CONTROLLER	
4114212C1	48-WAY ECM CONNECTOR BODY
4078604C1	WIRE TERMINAL 20-GUAGE (GOLD PLATED)
4078605C1	WIRE TERMINAL 18-GUAGE (GOLD PLATED)
C3 INTERNATIONAL® 48-WAY CONNECTOR ENGINE CONTROLLER	
4114211C1	48-WAY ECM CONNECTOR BODY
4078604C1	WIRE TERMINAL 20-GUAGE (GOLD PLATED)
4078605C1	WIRE TERMINAL 18-GUAGE (GOLD PLATED)
C4 INTERNATIONAL® 36-WAY VEHICLE INTERFACE CONNECTOR	
4114210C1	36-WAY ECM CONNECTOR BODY
4078605C1	WIRE TERMINAL 18-GUAGE (GOLD PLATED)
4078606C1	WIRE TERMINAL 16-GUAGE (GOLD PLATED)
VIC INTERNATIONAL® 24-WAY VEHICLE INTERFACE CONNECTOR	
4143904C1	24-WAY ECM CONNECTOR BODY
3567157C1	WIRE TERMINAL 16 to 18-GUAGE (TIN PLATED)
10-WAY CONNECTOR 4705 (BODY BUILDER CONNECTOR 1)	
3538634C1	10-WAY CONNECTOR BODY
3538636C1	10-WAY CONNECTOR LOCK
1667742C1	WIRE TERMINAL 18-GAUGE
3568570C1	WIRE TERMINAL SEAL 18-GAUGE
2025431C1	CONNECTOR CAVITY PLUG
10-WAY CONNECTOR 4706 (BODY BUILDER CONNECTOR 2)	
3538635C1	10-WAY CONNECTOR
3538636C1	10-WAY CONNECTOR LOCK
1661875C1	WIRE TERMINAL 18-GAUGE
3568570C1	WIRE TERMINAL SEAL 18-GAUGE
2025431C1	CONNECTOR CAVITY PLUG
Note: 4705 and 4706 are mating connectors. If you do not have the required mating connector for body builder connector one or two, order the parts for the other connector.	

Parts Associated with 12VGA Feature.

How to Test This Feature:
This feature is tested by programming the Engine Control Module (ECM) utilizing International Engine software (NED) or Service Diagnostic Solutions (SDS).

References:
Refer to the applicable International® Circuit Diagrams and Service Manuals.

18.11. 12VGU: ENGINE CONTROL, REMOTE MOUNTED Provision for; Includes Wiring for Body Builder Installation of PTO Controls for Cummins X15 Engines

Feature Applicability to Vehicle Platforms:

- Heavy Extreme (HX) 8/24/2020 to Present

Extended Description: Feature code 12VGU provides an engine interface connector to facilitate remote engine speed control with X15 Cummins engines. The interface connector is a 12-way connector located in the engine compartment on the driver's side. Please reference circuit diagrams and additional service documentation on the correct pinout of the interface connector as it may vary based on truck model.

Note: Feature 08XNL also provides an option that includes circuits for engine speed control on HX models built after 6/13/2024.

Note: This interface connector does not provide a Vehicle Speed Signal circuit. A vehicle Speed Signal is available at the TCM connector, on trucks with automatic transmissions. Refer to the circuit diagrams for connector and pin information. Feature code 12VYL may also be ordered on trucks with automatic transmissions. It provides a Vehicle Speed Signal circuit coiled behind the center of the instrument panel for body builder use. A separate Vehicle Speed Sensor or a sensor with 2 pigtails may need to be installed by the body builder on trucks with a manual transmission if a Vehicle Speed Signal is required.

Basic Remote Engine Speed Control:

Refer to Cummins AEB 15.141 – CM2350 Electronic Subsystem Technical Package – OEM Programming Guide

Note: When programming a Cummins engine for remote engine speed control it may be helpful to enable the "Transmission Driven PTO" parameter. This will help disable engine ramping that maintains exhaust temperature, during PTO operation.

There are 3 basic engine speed control configurations that use these circuits, Remote PTO, Remote Station PTO, and Remote Accelerator.

1. Remote PTO uses a ground input on one circuit to control up to 5 preset speeds. This uses Pin 94 of the ECM.
   a. If the "Remote PTO" parameter is enabled, with INSITE, using a switch to apply a ground, from the "Signal Return" pin to the "Remote PTO On/Off Switch" pin, of the 5715 connector, will make the engine ramp to the first preset.
   b. As determined by the value of the "Remote PTO Number of Speed Settings" parameter, set with INSITE, each successive toggle of the switch will increase the ramp to the next programmed preset speed.

c. Flipping the switch off, therefore removing the ground, will return the engine speed to idle.

2. Remote Station PTO uses ground inputs on several circuits to control up to 3 preset speeds or provide variable ramping. This action mimics the cruise switch functionality in the cab. This uses Pin 90 of the ECM.

a. If the "Remote Station PTO" parameter is enabled, with INSITE, using a switch to apply a ground, from the “Signal Return” pin to the "Control PTO On/Off Switch", of the 5715 connector, will enable the remote engine speed control.

b. Using a 3-position center stable switch to apply a momentary ground to the "Cruise Control/PTO Resume Switch" pin or the "Cruise Control/PTO Set Switch" pin, of the 5715 connector, will make the engine ramp up or down.

c. The engine ramping will step through the three presets or ramp variably, depending on the parameter settings, configured with INSITE. The Cruise switches and Hardwired "SET" and "RESUME" inputs will ramp variably, if the "Alternate PTO" setting is enabled.

3. Remote Accelerator

a. If the "Remote Accelerator" parameter is enabled, with INSITE, using a switch to apply a ground, from the “Signal Return” pin to the "Remote Accelerator On/Off Switch" pin, of the 5715 connector, will enable the remote accelerator.

b. The remote pedal or potentiometer has to be connected to the "Signal Return" pin, the "5 Volt Supply" pin and the "Remote Accelerator Pedal Signal", in the appropriate configuration, to provide a varying voltage, to the "Remote Accelerator Pedal Signal" pin, which increases as the pedal is pressed, or the potentiometer is turned.

c. If the remote accelerator is enabled, by the signal at the "Remote Accelerator On/Off Switch" pin, the engine speed should respond to the increase in voltage at the “Remote Accelerator Pedal signal” pin.

System Block Diagram:

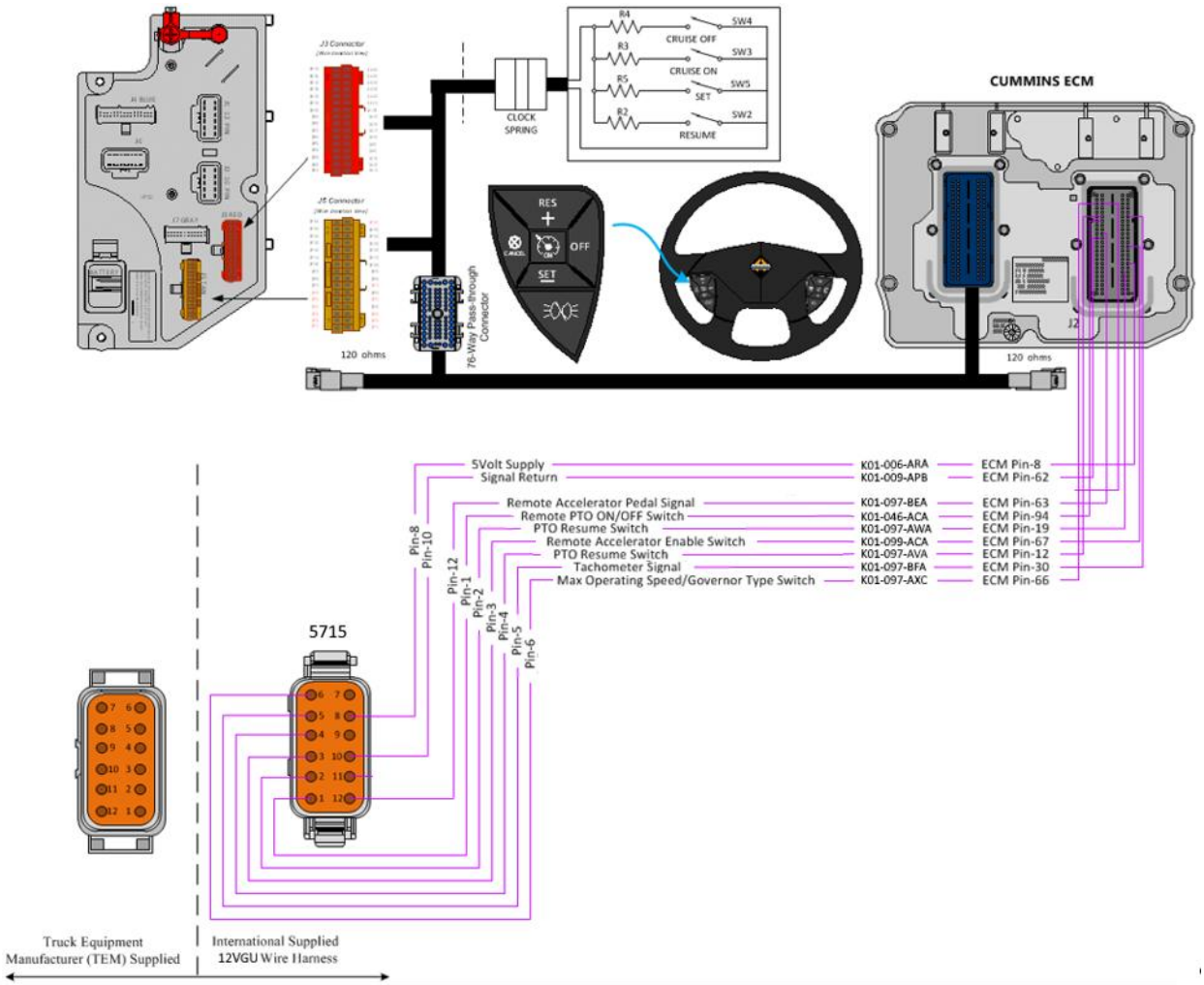

Heavy Extreme Series with Cummins X15

Component Location:



12-Way Connector (5715) Center of Picture

18.11.1. 12VGU Remote PTO Preset Set Speed - Wiring Diagram (Heavy Extreme Series):

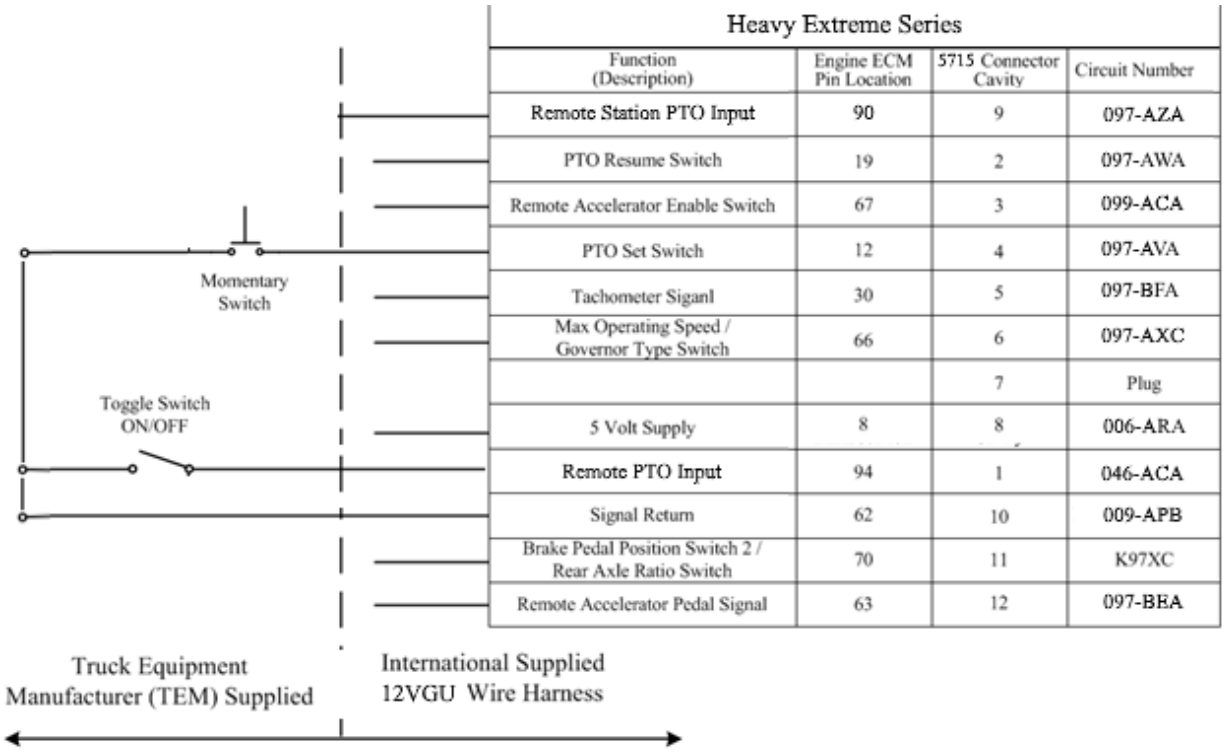

Heavy Extreme Series			
Function (Description)	Engine ECM Pin Location	5715 Connector Cavity	Circuit Number
Remote Station PTO Input	90	9	097-AZA
PTO Resume Switch	19	2	097-AWA
Remote Accelerator Enable Switch	67	3	099-ACA
PTO Set Switch	12	4	097-AVA
Tachometer Siganl	30	5	097-BFA
Max Operating Speed / Governor Type Switch	66	6	097-AXC
		7	Plug
5 Volt Supply	8	8	006-ARA
Remote PTO Input	94	1	046-ACA
Signal Return	62	10	009-APB
Brake Pedal Position Switch 2 / Rear Axle Ratio Switch	70	11	K97XC
Remote Accelerator Pedal Signal	63	12	097-BEA

Wiring Diagram for 12VGU Preset Set Speed Function
(Heavy Extreme Series)

18.11.2. 12VGU: Remote Station PTO Preset Set Resume Speed – Wiring Diagram (Heavy Extreme Series):

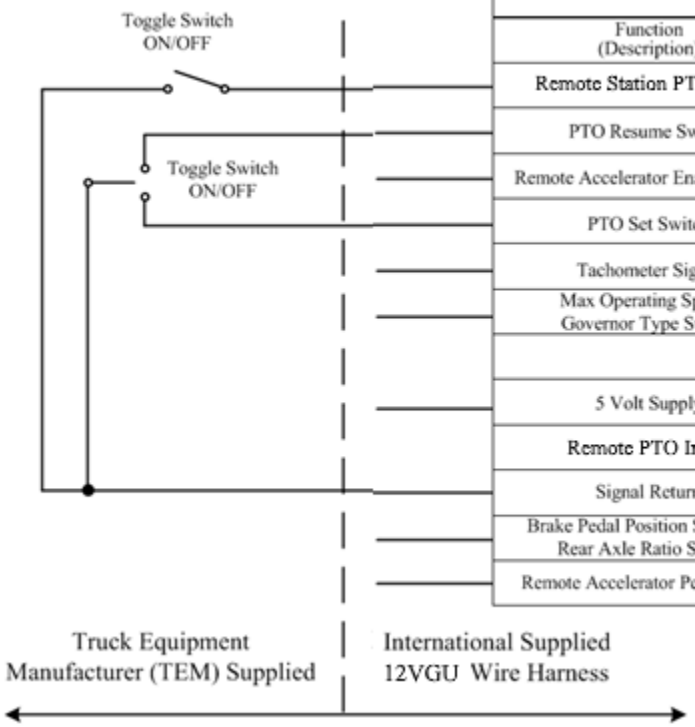

Heavy Extreme Series			
Function (Description)	Engine ECM Pin Location	5715 Connector Cavity	Circuit Number
Remote Station PTO Input	90	9	097-AZA
PTO Resume Switch	19	2	097-AWA
Remote Accelerator Enable Switch	67	3	099-ACA
PTO Set Switch	12	4	097-AVA
Tachometer Siganl	30	5	097-BFA
Max Operating Speed / Governor Type Switch	66	6	097-AXC
		7	Plug
5 Volt Supply	8	8	006-ARA
Remote PTO Input	94	1	046-ACA
Signal Return	62	10	009-APB
Brake Pedal Position Switch 2 / Rear Axle Ratio Switch	70	11	K97XC
Remote Accelerator Pedal Signal	63	12	097-BEA

Wiring Diagram for 12VGU Preset Set Resume Speed Function
(Heavy Extreme Series)

18.11.3. 12VGU: Remote Accelerator - Wiring Diagram (Heavy Extreme Series):

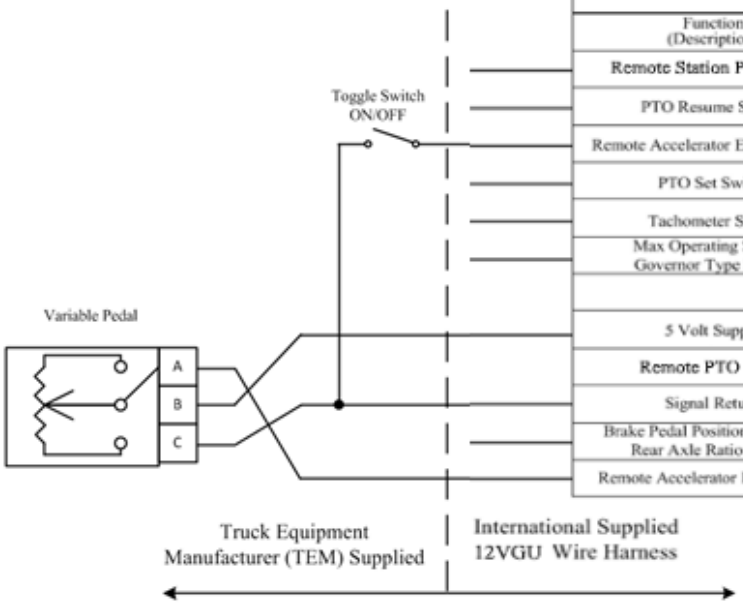

Heavy Extreme Series			
Function (Description)	Engine ECM Pin Location	5715 Connector Cavity	Circuit Number
Remote Station PTO Input	90	9	097-AZA
PTO Resume Switch	19	2	097-AWA
Remote Accelerator Enable Switch	67	3	099-ACA
PTO Set Switch	12	4	097-AVA
Tachometer Siganl	30	5	097-BFA
Max Operating Speed / Governor Type Switch	66	6	097-AXC
		7	Plug
5 Volt Supply	8	8	006-ARA
Remote PTO Input	94	1	046-ACA
Signal Return	62	10	009-APB
Brake Pedal Position Switch 2 / Rear Axle Ratio Switch	70	11	K97XC
Remote Accelerator Pedal Signal	63	12	097-BEA

Wiring Diagram for 12VGU Remote Accelerator Control Function
(Heavy Extreme Series)

18.11.4. 12VGU: Auxiliary Tachometer - Wiring Diagram (Heavy Extreme Series):

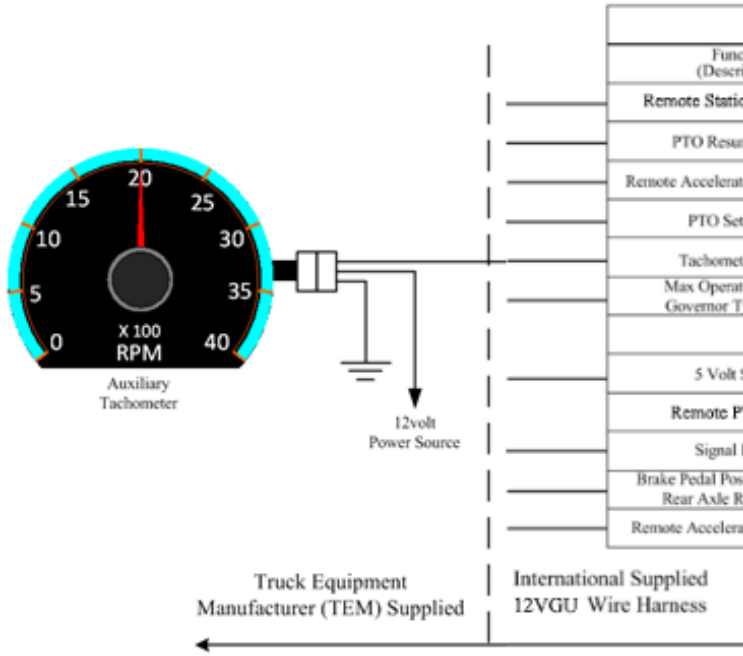

Heavy Extreme Series			
Function (Description)	Engine ECM Pin Location	5715 Connector Cavity	Circuit Number
Remote Station PTO Input	90	9	097-AZA
PTO Resume Switch	19	2	097-AWA
Remote Accelerator Enable Switch	67	3	099-ACA
PTO Set Switch	12	4	097-AVA
Tachometer Siganl	30	5	097-BFA
Max Operating Speed / Governor Type Switch	66	6	097-AXC
		7	Plug
5 Volt Supply	8	8	006-ARA
Remote PTO Input	94	1	046-ACA
Signal Return	62	10	009-APB
Brake Pedal Position Switch 2 / Rear Axle Ratio Switch	70	11	K97XC
Remote Accelerator Pedal Signal	63	12	097-BEA

Wiring Diagram for 12VGU Auxiliary Tachometer Function
(Heavy Extreme Series)

18.11.5. 12VGU: Engine or Vehicle Speed Switch - Wiring Diagram (Heavy Extreme Series):

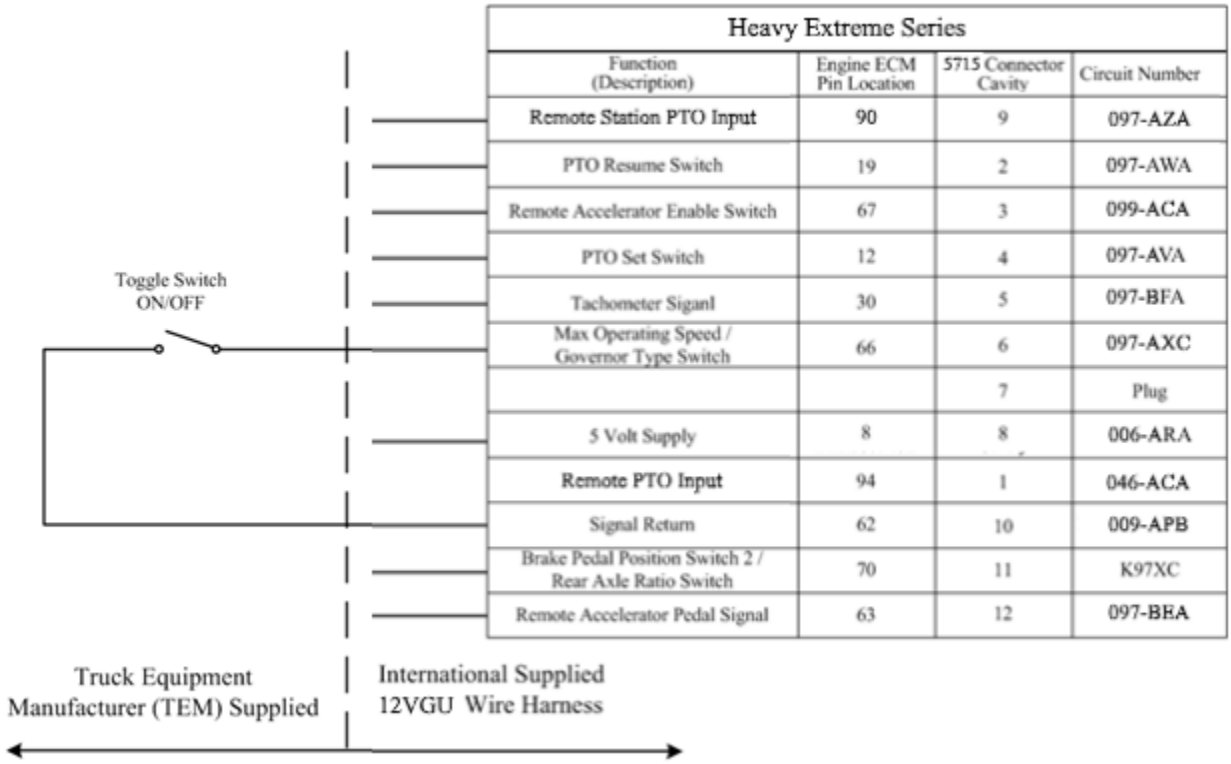

Heavy Extreme Series			
Function (Description)	Engine ECM Pin Location	5715 Connector Cavity	Circuit Number
Remote Station PTO Input	90	9	097-AZA
PTO Resume Switch	19	2	097-AWA
Remote Accelerator Enable Switch	67	3	099-ACA
PTO Set Switch	12	4	097-AVA
Tachometer Siganl	30	5	097-BFA
Max Operating Speed / Governor Type Switch	66	6	097-AXC
		7	Plug
5 Volt Supply	8	8	006-ARA
Remote PTO Input	94	1	046-ACA
Signal Return	62	10	009-APB
Brake Pedal Position Switch 2 / Rear Axle Ratio Switch	70	11	K97XC
Remote Accelerator Pedal Signal	63	12	097-BEA

Wiring Diagram for 12VGU Engine or Vehicle Speed Switch Function
(Heavy Extreme Series)

Parts Associated with This Feature:

PART NUMBER	DESCRIPTION
CUMMINS 96-WAY ENGINE CONTROLLER CONNECTORS	
COMES ON ENGINE FROM CUMMINS	J1 CONNECTOR BODY (ENGINE)
3945694C1	96-WAY (J2) CHASSIS CONNECTOR BODY
3743666C1	WIRE TERMINAL 18-GUAGE (GOLD PLATED)
3743668C1	WIRE TERMINAL 20-GUAGE (GOLD PLATED)
12-WAY CONNECTOR 5715M (ENGINE EXTENTION HARNESS)	
3586750C1	12-WAY CONNECTOR BODY 5715 (MALE)
3553460C1	12-WAY CONNECTOR LOCK
3518963C1	WIRE TERMINAL 18/20-GAUGE (FEMALE)
3527276C1	CONNECTOR CAVITY PLUG
12-WAY MATING CONNECTOR FOR 5715M (BODY BUILDER HARNESS)	
3838727C1	12-WAY CONNECTOR 5715 (FEMALE)
3589992C1	12-WAY CONNECTOR LOCK
3518961C1	WIRE TERMINAL 18/20-GAUGE (MALE)
3527276C1	CONNECTOR CAVITY PLUG

Connector Parts Associated with 12VGU Feature

18.12. 12XAT: ENGINE CONTROL, REMOTE MOUNTED Provision for; Includes Wiring for Body Builder Installation of PTO Controls; with Ignition Switch Control for Cummins ISB/B6.7 or ISL/L9 Engines

Feature Applicability to Vehicle Platforms:

- Heavy Vocational (HV)
- Medium Vocational (MV)

Extended Description: Feature code 12XAT provides an engine interface connector to facilitate remote engine speed control with ISB or B6.7 Cummins engines. The interface connector is a 12-way connector located in the engine compartment on the driver's side. Please reference circuit diagrams and additional service documentation on the correct pinout of the interface connector as it may vary based on truck model.

Note: This interface connector does not provide a Vehicle Speed Signal circuit. A vehicle Speed Signal is available at the TCM connector, on trucks with automatic transmissions. Refer to the circuit diagrams for connector and pin information. Feature code 12VYL may also be ordered on trucks with automatic transmissions. 2VYL provides a Vehicle Speed Signal circuit coiled behind the center of the instrument panel for body builder use. A separate Vehicle Speed Sensor or a sensor with 2 pigtails may need to be installed by the body builder on trucks with a manual transmission if a Vehicle Speed Signal is required.

Basic Remote Engine Speed Control:

Refer to Cummins AEB 15.141 – CM2350 Electronic Subsystem Technical Package – OEM Programming Guide

Note: When programming a Cummins engine for remote engine speed control it may be helpful to enable the "Transmission Driven PTO" parameter. This will help disable engine ramping that maintains exhaust temperature, during PTO operation.

There are 3 basic engine speed control configurations that use these circuits, Remote PTO, Remote Station PTO, and Remote Accelerator.

1. Remote PTO uses a ground input on one circuit to control up to 5 preset speeds. This uses Pin 94 of the ECM.
   a. If the "Remote PTO" parameter is enabled, with INSITE, using a switch to apply a ground, from the "Signal Return" pin to the "Remote PTO On/Off Switch" pin, of the 7207 connector, will make the engine ramp to the first preset.
   b. As determined by the value of the "Remote PTO Number of Speed Settings" parameter, set with INSITE, each successive toggle of the switch will increase the ramp to the next programmed preset speed.

c. Flipping the switch off, therefore removing the ground, will return the engine speed to idle.

2. Remote Station PTO uses ground inputs on several circuits to control up to 3 preset speeds or provide variable ramping. This action mimics the cruise switch functionality in the cab. This uses Pin 90 of the ECM.

a. If the "Remote Station PTO" parameter is enabled, with INSITE, using a switch to apply a ground, from the “Signal Return” pin to the "Control PTO On/Off Switch", of the 7207 connector, will enable the remote engine speed control.

b. Using a 3-position center stable switch to apply a momentary ground to the "Cruise Control/PTO Resume Switch" pin or the "Cruise Control/PTO Set Switch" pin, of the 7207 connector, will make the engine ramp up or down.

c. The engine ramping will step through the three presets or ramp variably, depending on the parameter settings, configured with INSITE. The Cruise switches and Hardwired "SET" and "RESUME" inputs will ramp variably, if the "Alternate PTO" setting is enabled.

3. Remote Accelerator

a. If the "Remote Accelerator" parameter is enabled in INSITE, you can enable the remote accelerator by using a switch to apply a ground from the "Signal Return" pin to the "Remote Accelerator On/Off Switch" pin on the 7207 connector.

b. The remote pedal or potentiometer has to be connected to the "Signal Return" pin, the "5 Volt Supply" pin and the "Remote Accelerator Pedal Signal", in the appropriate configuration, to provide a varying voltage, to the "Remote Accelerator Pedal Signal" pin, which increases as the pedal is pressed or the potentiometer is turned.

c. If the remote accelerator is enabled, by the signal at the "Remote Accelerator On/Off Switch" pin, the engine speed should respond to the increase in voltage at the “Remote Accelerator Pedal signal” pin.

System Block Diagram:

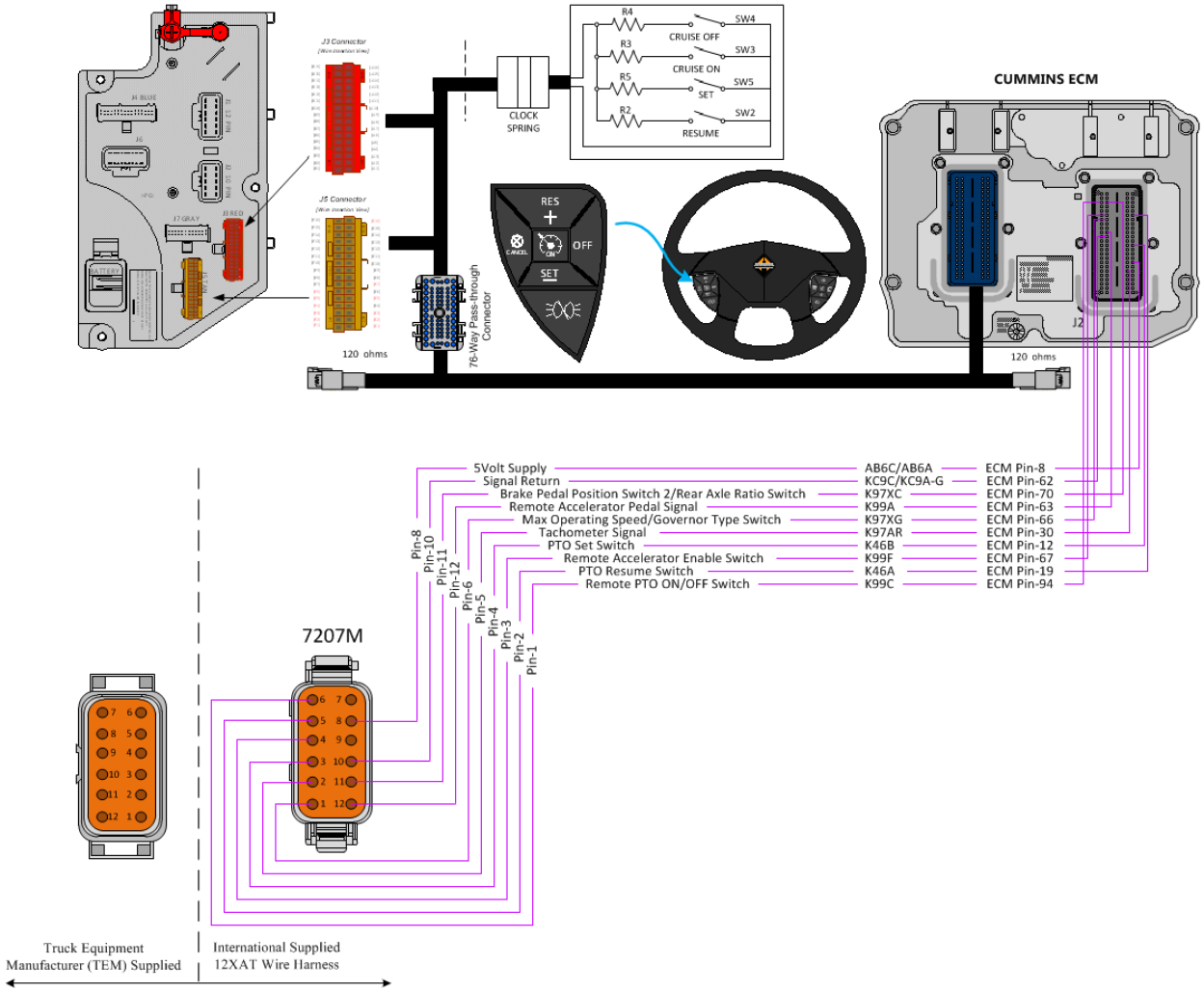

Severe Vocational Series with Cummins ISB/B6.7 or ISL/L9

18.12.1. 12XAT: SEVERE VOCATIONAL SERIES - Wiring Diagrams:

18.12.1.1. 12XAT Preset Set Speed - Wiring Diagram (Severe Vocational Series):

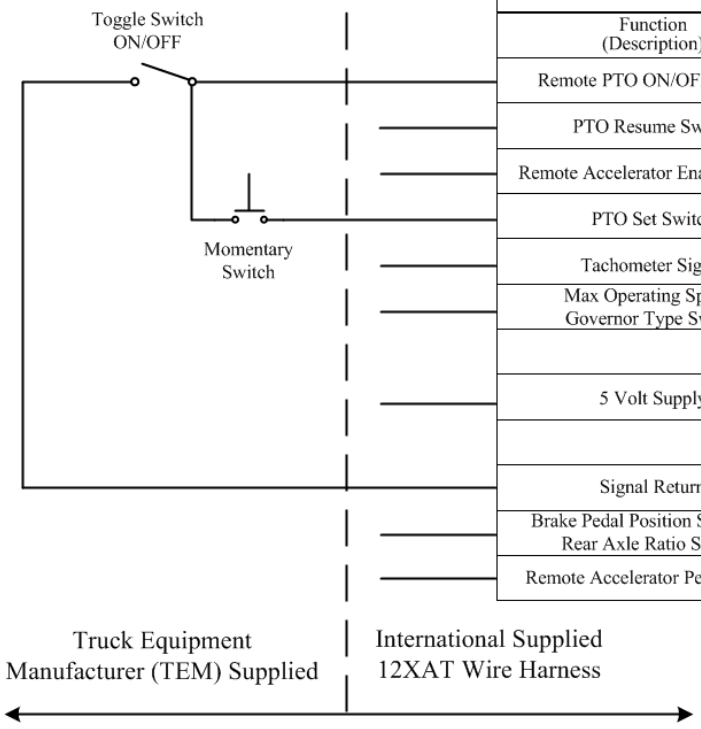

Severe Vocational Series			
Function (Description)	Engine ECM Pin Location	7207 Connector Cavity	Circuit Number
Remote PTO ON/OFF Switch	94	1	K99C
PTO Resume Switch	19	2	K46A
Remote Accelerator Enable Switch	67	3	K99F
PTO Set Switch	12	4	K46B
Tachometer Siganl	30	5	K97AR
Max Operating Speed / Governor Type Switch	66	6	K97XG
		7	Plug
5 Volt Supply	8	8	AB6C/AB6A
		9	Plug
Signal Return	62	10	KC9C-G/KC9A-G
Brake Pedal Position Switch 2 / Rear Axle Ratio Switch	70	11	K97XC
Remote Accelerator Pedal Signal	63	12	K99A

Wiring Diagram for 12XAT Preset Set Speed Function
(Severe Vocational Series)

18.12.1.2. 12XAT: Preset Resume Speed - Wiring Diagram (Severe Vocational Series):

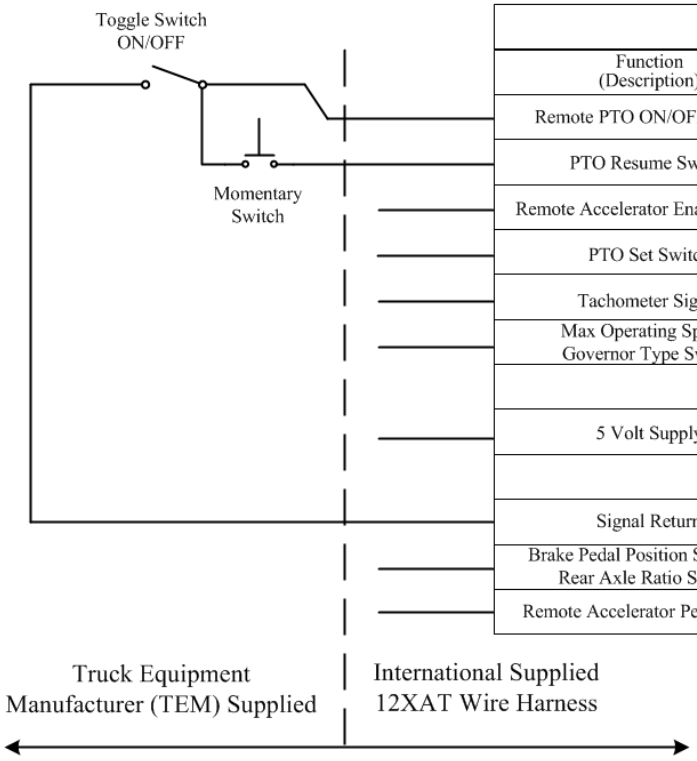

Severe Vocational Series			
Function (Description)	Engine ECM Pin Location	7207 Connector Cavity	Circuit Number
Remote PTO ON/OFF Switch	94	1	K99C
PTO Resume Switch	19	2	K46A
Remote Accelerator Enable Switch	67	3	K99F
PTO Set Switch	12	4	K46B
Tachometer Siganl	30	5	K97AR
Max Operating Speed / Governor Type Switch	66	6	K97XG
		7	Plug
5 Volt Supply	8	8	AB6C/AB6A
		9	Plug
Signal Return	62	10	KC9C-G/KC9A-G
Brake Pedal Position Switch 2 / Rear Axle Ratio Switch	70	11	K97XC
Remote Accelerator Pedal Signal	63	12	K99A

Wiring Diagram for 12XAT Preset Resume Speed Function
(Severe Vocational Series)

18.12.1.4. 12XAT: Preset Set Resume Speed – Wiring Diagram (Severe Vocational Series):

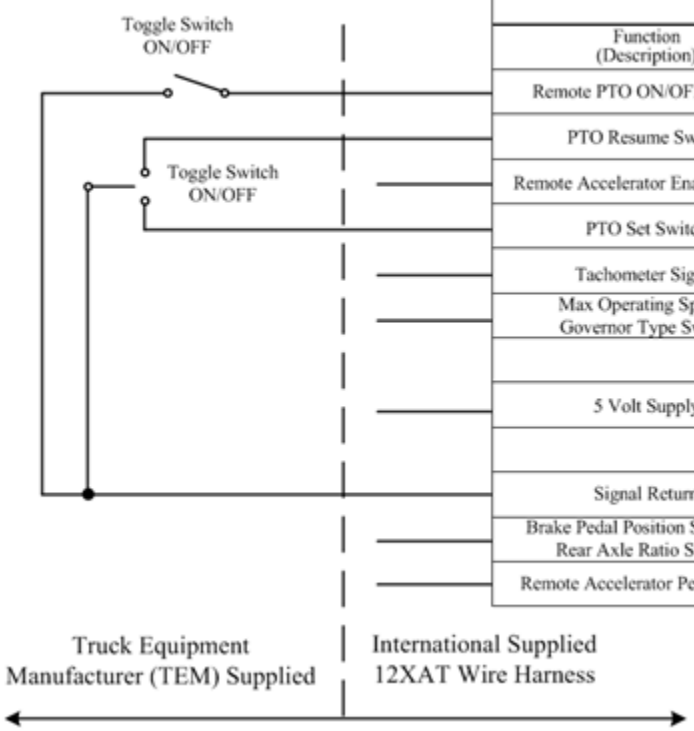

Severe Vocational Series			
Function (Description)	Engine ECM Pin Location	7207 Connector Cavity	Circuit Number
Remote PTO ON/OFF Switch	94	1	K99C
PTO Resume Switch	19	2	K46A
Remote Accelerator Enable Switch	67	3	K99F
PTO Set Switch	12	4	K46B
Tachometer Siganl	30	5	K97AR
Max Operating Speed / Governor Type Switch	66	6	K97XG
		7	Plug
5 Volt Supply	8	8	AB6C/AB6A
		9	Plug
Signal Return	62	10	KC9C-G/KC9A-G
Brake Pedal Position Switch 2 / Rear Axle Ratio Switch	70	11	K97XC
Remote Accelerator Pedal Signal	63	12	K99A

Wiring Diagram for 12XAT Preset Set Resume Speed Function
(Severe Vocational Series)

18.12.1.5. 12XAT: Variable Pedal Control - Wiring Diagram (Severe Vocational Series):

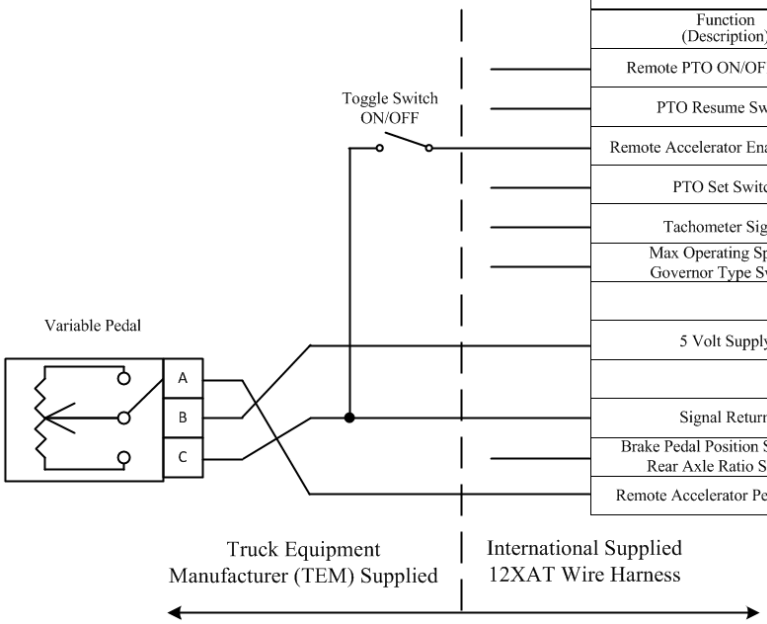

Severe Vocational Series			
Function (Description)	Engine ECM Pin Location	7207 Connector Cavity	Circuit Number
Remote PTO ON/OFF Switch	94	1	K99C
PTO Resume Switch	19	2	K46A
Remote Accelerator Enable Switch	67	3	K99F
PTO Set Switch	12	4	K46B
Tachometer Siganl	30	5	K97AR
Max Operating Speed / Governor Type Switch	66	6	K97XG
		7	Plug
5 Volt Supply	8	8	AB6C/AB6A
		9	Plug
Signal Return	62	10	KC9C-G/KC9A-G
Brake Pedal Position Switch 2 / Rear Axle Ratio Switch	70	11	K97XC
Remote Accelerator Pedal Signal	63		K99A

Wiring Diagram for 12XAT Variable Pedal Control Function
(Severe Vocational Series)

18.12.1.6. 12XAT: Auxiliary Tachometer - Wiring Diagram (Severe Vocational Series):

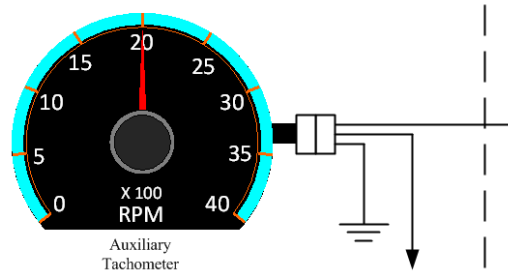

Severe Vocational Series			
Function (Description)	Engine ECM Pin Location	7207 Connector Cavity	Circuit Number
Remote PTO ON/OFF Switch	94	1	K99C
PTO Resume Switch	19	2	K46A
Remote Accelerator Enable Switch	67	3	K99F
PTO Set Switch	12	4	K46B
Tachometer Siganl	30	5	K97AR
Max Operating Speed / Governor Type Switch	66	6	K97XG
		7	Plug
5 Volt Supply	8	8	AB6C/AB6A
		9	Plug
Signal Return	62	10	KC9C-G/KC9A-G
Brake Pedal Position Switch 2 / Rear Axle Ratio Switch	70	11	K97XC
Remote Accelerator Pedal Signal	63		K99A

Wiring Diagram for 12XAT Auxiliary Tachometer Function
(Severe Vocational Series)

18.12.1.7. 12XAT: Engine or Vehicle Speed Switch - Wiring Diagram (Severe Vocational Series):

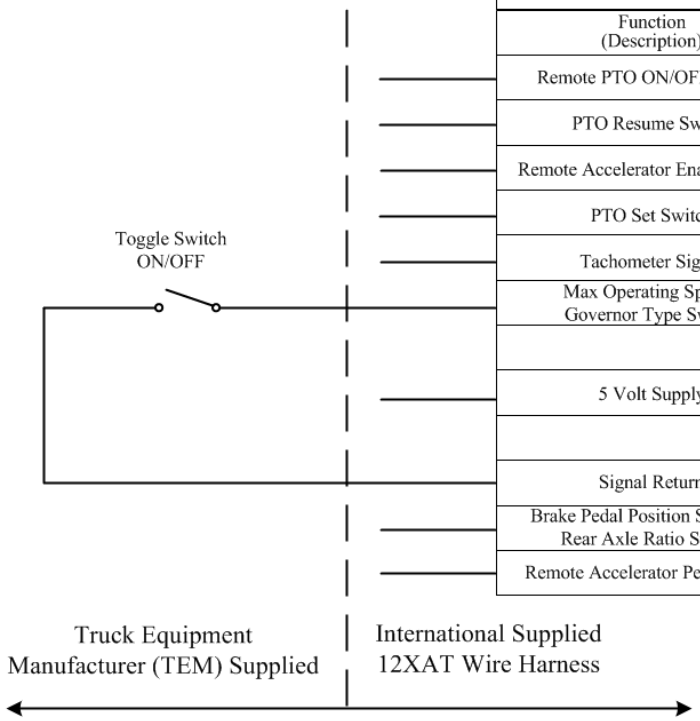

Severe Vocational Series			
Function (Description)	Engine ECM Pin Location	7207 Connector Cavity	Circuit Number
Remote PTO ON/OFF Switch	94	1	K99C
PTO Resume Switch	19	2	K46A
Remote Accelerator Enable Switch	67	3	K99F
PTO Set Switch	12	4	K46B
Tachometer Siganl	30	5	K97AR
Max Operating Speed / Governor Type Switch	66	6	K97XG
		7	Plug
5 Volt Supply	8	8	AB6C/AB6A
		9	Plug
Signal Return	62	10	KC9C-G/KC9A-G
Brake Pedal Position Switch 2 / Rear Axle Ratio Switch	70	11	K97XC
Remote Accelerator Pedal Signal	63	12	K99A

Wiring Diagram for 12XAT Engine or Vehicle Speed Switch Function
(Severe Vocational Series)

18.12.1.8. 12XAT: Rear Axle Ratio Switch - Wiring Diagram (Severe Vocational Series):

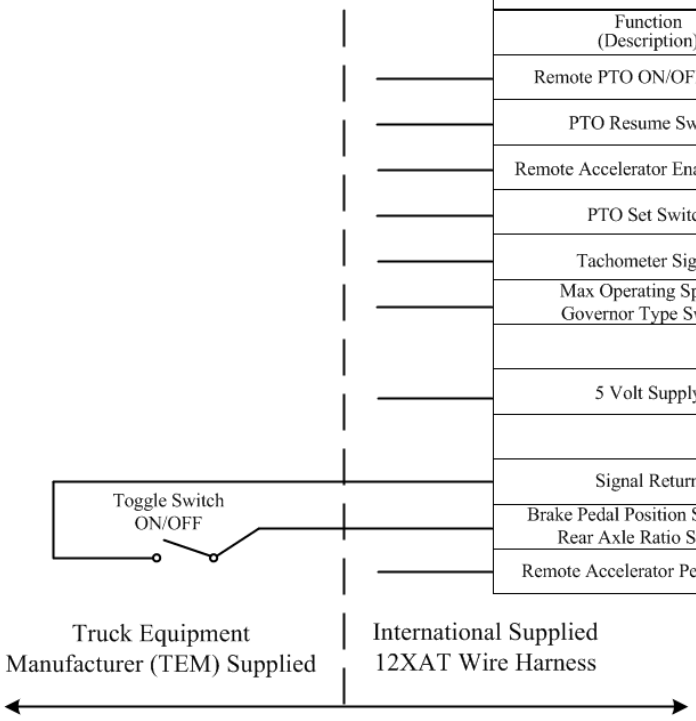

Severe Vocational Series			
Function (Description)	Engine ECM Pin Location	7207 Connector Cavity	Circuit Number
Remote PTO ON/OFF Switch	94	1	K99C
PTO Resume Switch	19	2	K46A
Remote Accelerator Enable Switch	67	3	K99F
PTO Set Switch	12	4	K46B
Tachometer Siganl	30	5	K97AR
Max Operating Speed / Governor Type Switch	66	6	K97XG
		7	Plug
5 Volt Supply	8	8	AB6C/AB6A
		9	Plug
Signal Return	62	10	KC9C-G/KC9A-G
Brake Pedal Position Switch 2 / Rear Axle Ratio Switch	70	11	K97XC
Remote Accelerator Pedal Signal	63	12	K99A

Wiring Diagram for 12XAT Rear Axle Ratio Switch Function
(Severe Vocational Series)

Parts Associated with This Feature:

PART NUMBER	DESCRIPTION
CUMMINS 96-WAY ENGINE CONTROLLER CONNECTORS	
COMES ON ENGINE FROM CUMMINS	J1 CONNECTOR BODY (ENGINE)
3945694C1	96-WAY (J2) CHASSIS CONNECTOR BODY
3743666C1	WIRE TERMINAL 18-GUAGE (GOLD PLATED)
3743668C1	WIRE TERMINAL 20-GUAGE (GOLD PLATED)
12-WAY CONNECTOR 7207M (ENGINE EXTENTION HARNESS)	
3586750C1	12-WAY CONNECTOR BODY 7207 (MALE)
3553460C1	12-WAY CONNECTOR LOCK
3518963C1	WIRE TERMINAL 18/20-GAUGE (FEMALE)
3527276C1	CONNECTOR CAVITY PLUG
12-WAY MATING CONNECTOR FOR 7207M (BODY BUILDER HARNESS)	
3838727C1	12-WAY CONNECTOR 7207 (FEMALE)
3589992C1	12-WAY CONNECTOR LOCK
3518961C1	WIRE TERMINAL 18/20-GAUGE (MALE)
3527276C1	CONNECTOR CAVITY PLUG

Connector Parts Associated with 12XAT Feature.
(Severe Vocational Series)

18.12.2. 12XAT: MEDIUM VOCATIONAL SERIES – Wiring Diagrams:

System Block Diagram:

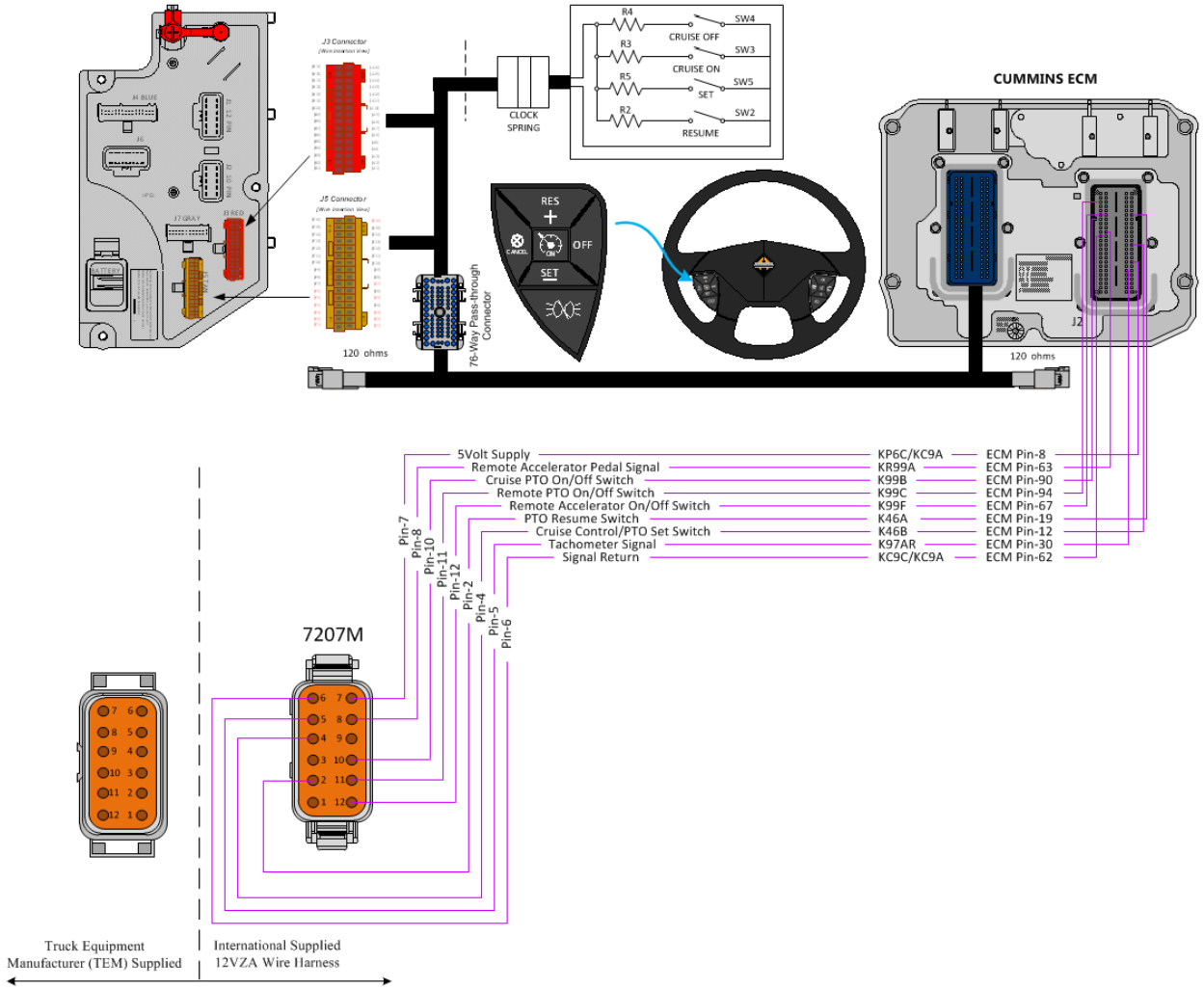

Medium Vocational Series with Cummins B6.7 or L9

18.12.2.4. 12XAT: Preset Set Speed - Wiring Diagram (Medium Vocational Series):

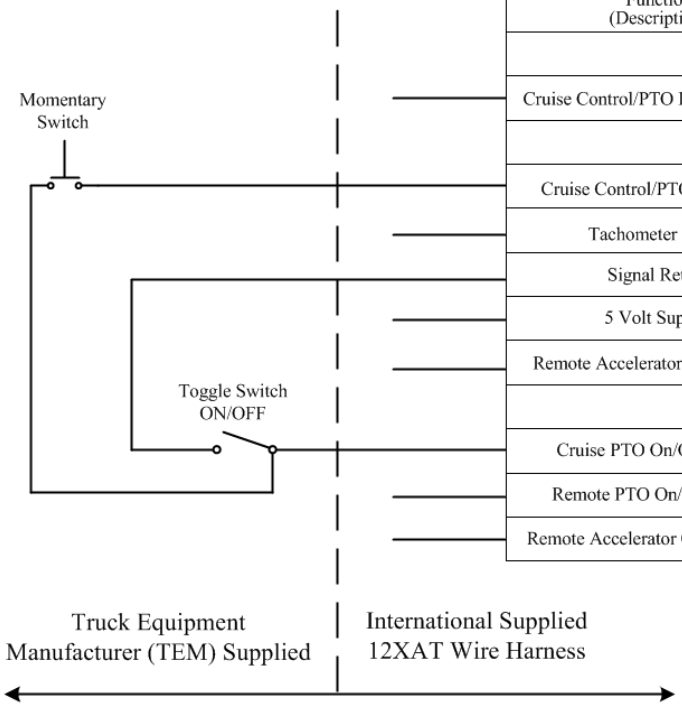

Medium Vocational Series			
Function (Description)	Engine ECM Pin Location	7207 Connector Cavity	Circuit Number
		1	Plug
Cruise Control/PTO Resume Switch	19	2	K46A
		3	Plug
Cruise Control/PTO Set Switch	12	4	K46B
Tachometer Siganl	30	5	K97AR
Signal Return	62	6	KC9C/KC9A
5 Volt Supply	8	7	KP6C/KP6A
Remote Accelerator Pedal Signal	63	8	KR99A
		9	Plug
Cruise PTO On/Off Switch	90	10	K99B
Remote PTO On/Off Switch	94	11	K99C
Remote Accelerator On/Off Switch	67	12	K99F

Wiring Diagram for 12XAT Preset Set Speed Function
(Medium Vocational Series)

18.12.2.5. 12XAT: Preset Resume Speed - Wiring Diagram (Medium Vocational Series):

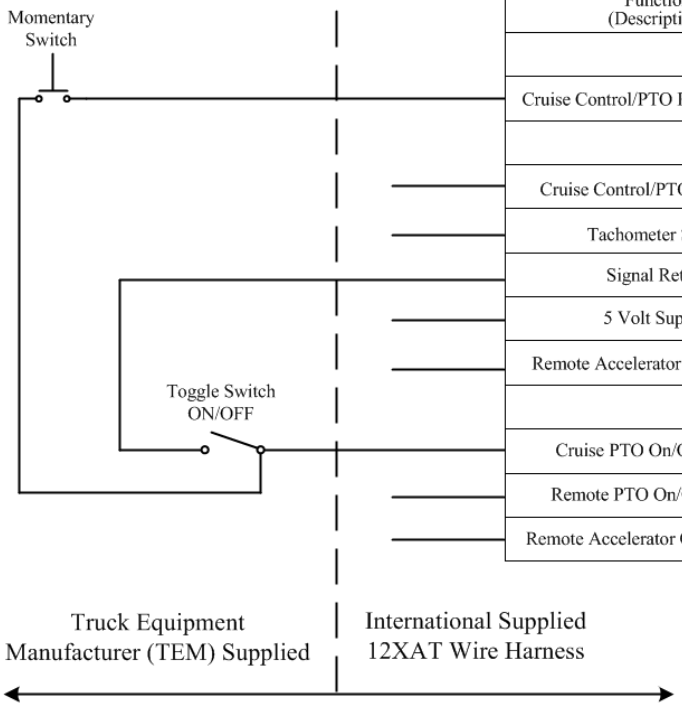

Medium Vocational Series			
Function (Description)	Engine ECM Pin Location	7207 Connector Cavity	Circuit Number
		1	Plug
Cruise Control/PTO Resume Switch	19	2	K46A
		3	Plug
Cruise Control/PTO Set Switch	12	4	K46B
Tachometer Siganl	30	5	K97AR
Signal Return	62	6	KC9C/KC9A
5 Volt Supply	8	7	KP6C/KP6A
Remote Accelerator Pedal Signal	63	8	KR99A
		9	Plug
Cruise PTO On/Off Switch	90	10	K99B
Remote PTO On/Off Switch	94	11	K99C
Remote Accelerator On/Off Switch	67	12	K99F

Wiring Diagram for 12XAT Preset Resume Speed Function
(Medium Vocational Series)

18.12.2.6. 12XAT: Preset Set Resume Speed - Wiring Diagram (Medium Vocational Series):

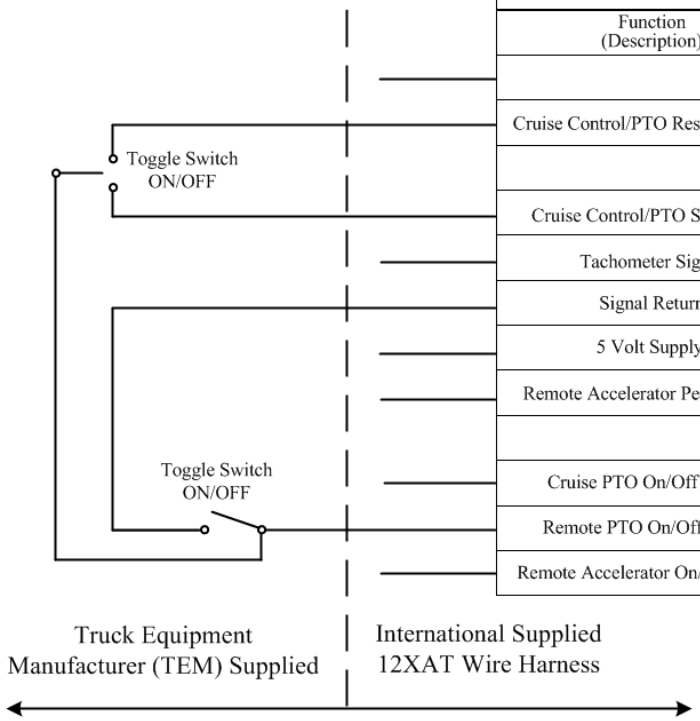

Medium Vocational Series			
Function (Description)	Engine ECM Pin Location	7207 Connector Cavity	Circuit Number
		1	Plug
Cruise Control/PTO Resume Switch	19	2	K46A
		3	Plug
Cruise Control/PTO Set Switch	12	4	K46B
Tachometer Siganl	30	5	K97AR
Signal Return	62	6	KC9C/KC9A
5 Volt Supply	8	7	KP6C/KP6A
Remote Accelerator Pedal Signal	63	8	KR99A
		9	Plug
Cruise PTO On/Off Switch	90	10	K99B
Remote PTO On/Off Switch	94	11	K99C
Remote Accelerator On/Off Switch	67		K99F

Wiring Diagram for 12XAT Preset Set Resume Speed Function
(Medium Vocational Series)

18.12.2.7. 12XAT: Variable Set Resume Speed - Wiring Diagram (Medium Vocational Series):

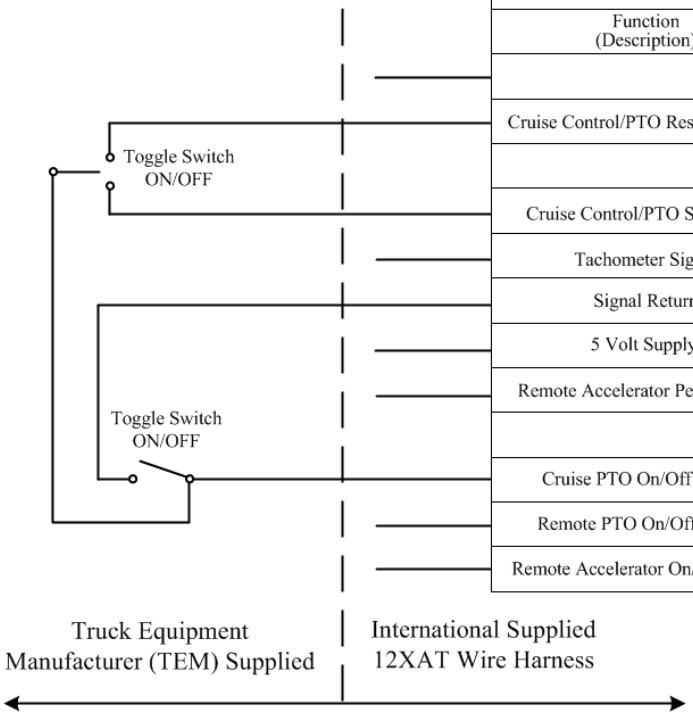

Medium Vocational Series			
Function (Description)	Engine ECM Pin Location	7207 Connector Cavity	Circuit Number
		1	Plug
Cruise Control/PTO Resume Switch	19	2	K46A
		3	Plug
Cruise Control/PTO Set Switch	12	4	K46B
Tachometer Siganl	30	5	K97AR
Signal Return	62	6	KC9C/KC9A
5 Volt Supply	8	7	KP6C/KP6A
Remote Accelerator Pedal Signal	63	8	KR99A
		9	Plug
Cruise PTO On/Off Switch	90	10	K99B
Remote PTO On/Off Switch	94	11	K99C
Remote Accelerator On/Off Switch	67	12	K99F

Wiring Diagram for 12XAT Variable Set Resume Speed Function
(Medium Vocational Series)

18.12.2.8. 12XAT: Variable Pedal Control - Wiring Diagram (Medium Vocational Series):

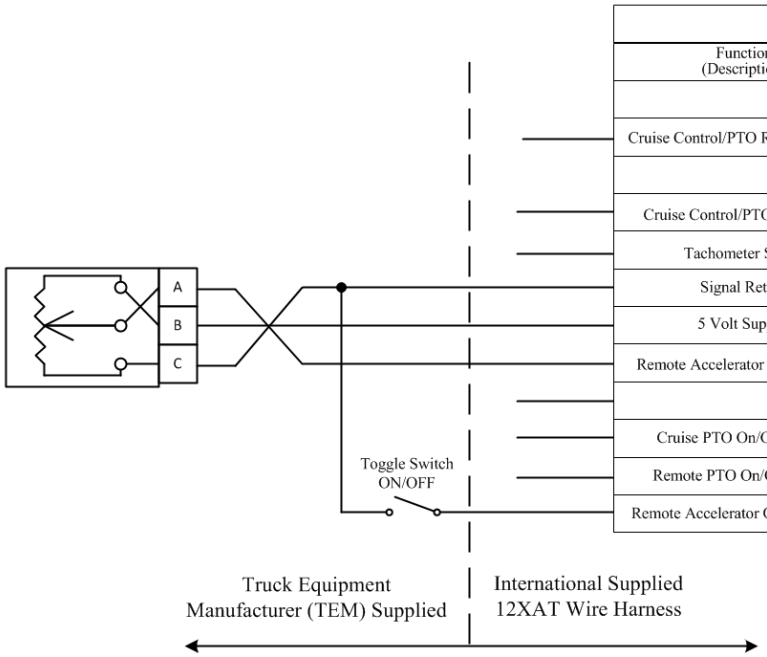

Medium Vocational Series			
Function (Description)	Engine ECM Pin Location	7207 Connector Cavity	Circuit Number
		1	Plug
Cruise Control/PTO Resume Switch	19	2	K46A
		3	Plug
Cruise Control/PTO Set Switch	12	4	K46B
Tachometer Siganl	30	5	K97AR
Signal Return	62	6	KC9C/KC9A
5 Volt Supply	8	7	KP6C/KP6A
Remote Accelerator Pedal Signal	63	8	KR99A
		9	Plug
Cruise PTO On/Off Switch	90	10	K99B
Remote PTO On/Off Switch	94	11	K99C
Remote Accelerator On/Off Switch	67	12	K99F

Wiring Diagram for 12XAT Variable Pedal Control Function
(Medium Vocational Series)

18.12.2.9. 12XAT: Auxiliary Tachometer - Wiring Diagram (Medium Vocational Series):

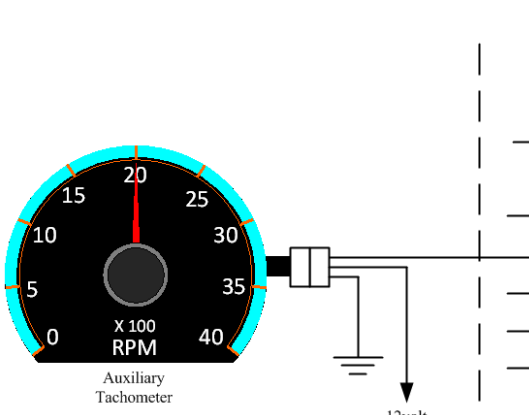

Medium Vocational Series			
Function (Description)	Engine ECM Pin Location	7207 Connector Cavity	Circuit Number
		1	Plug
Cruise Control/PTO Resume Switch	19	2	K46A
		3	Plug
Cruise Control/PTO Set Switch	12	4	K46B
Tachometer Siganl	30	5	K97AR
Signal Return	62	6	KC9C/KC9A
5 Volt Supply	8	7	KP6C/KP6A
Remote Accelerator Pedal Signal	63	8	KR99A
		9	Plug
Cruise PTO On/Off Switch	90	10	K99B
Remote PTO On/Off Switch	94	11	K99C
Remote Accelerator On/Off Switch	67	12	K99F

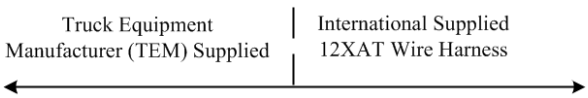

Wiring Diagram for 12XAT Auxiliary Tachometer Function
(Medium Vocational Series)

Parts Associated with This Feature:

PART NUMBER	DESCRIPTION
CUMMINS 96-WAY ENGINE CONTROLLER CONNECTORS	
COMES ON ENGINE FROM CUMMINS	J1 CONNECTOR BODY (ENGINE)
3945694C1	96-WAY (J2) CHASSIS CONNECTOR BODY
3743666C1	WIRE TERMINAL 18-GUAGE (GOLD PLATED)
3743668C1	WIRE TERMINAL 20-GUAGE (GOLD PLATED)
12-WAY CONNECTOR 7207M (ENGINE EXTENTION HARNESS)	
3586750C1	12-WAY CONNECTOR BODY 7207 (MALE)
3553460C1	12-WAY CONNECTOR LOCK
3518963C1	WIRE TERMINAL 18/20-GAUGE (FEMALE)
3527276C1	CONNECTOR CAVITY PLUG
12-WAY MATING CONNECTOR FOR 7207M (BODY BUILDER HARNESS)	
3838727C1	12-WAY CONNECTOR 7207 (FEMALE)
3589992C1	12-WAY CONNECTOR LOCK
3518961C1	WIRE TERMINAL 18/20-GAUGE (MALE)
3527276C1	CONNECTOR CAVITY PLUG

Connector Parts Associated with 12XAT Feature
(Medium Vocational Series)

How to Test This Feature:

Note: This feature's programmable parameters are set and tested using the Cummins Engine INSITE Software package.

References:
Refer to the applicable International® Circuit Diagrams and Service Manuals.

18.12.3. 12XAT: MEDIUM VOCATIONAL SERIES – Wiring Diagrams:

System Block Diagram:

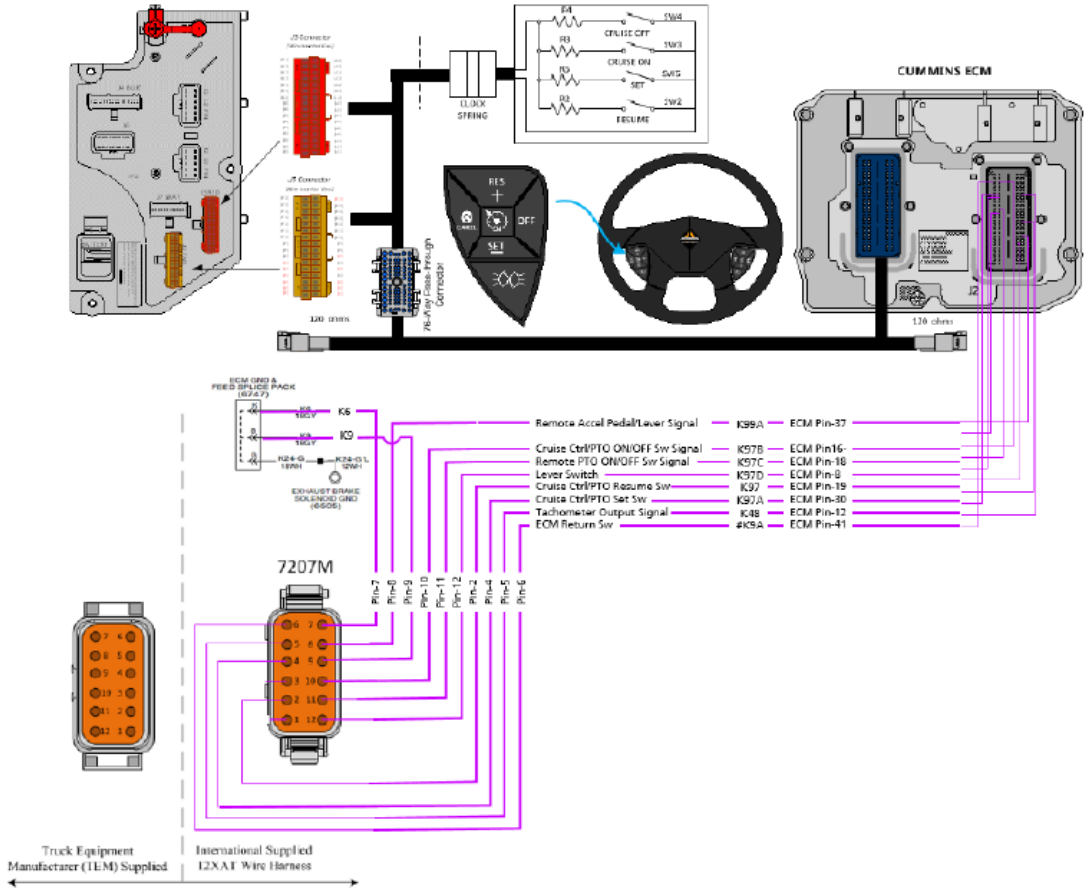

Parts Associated with This Feature:

PART NUMBER	DESCRIPTION
CUMMINS 96-WAY ENGINE CONTROLLER CONNECTORS	
COMES ON ENGINE FROM CUMMINS	J1 CONNECTOR BODY (ENGINE)
3945694C1	96-WAY (J2) CHASSIS CONNECTOR BODY
3743666C1	WIRE TERMINAL 18-GUAGE (GOLD PLATED)
3743668C1	WIRE TERMINAL 20-GUAGE (GOLD PLATED)
12-WAY CONNECTOR 7207M (ENGINE EXTENTION HARNESS)	
3586750C1	12-WAY CONNECTOR BODY 7207 (MALE)
3553460C1	12-WAY CONNECTOR LOCK
3518963C1	WIRE TERMINAL 18/20-GAUGE (FEMALE)
3527276C1	CONNECTOR CAVITY PLUG
12-WAY MATING CONNECTOR FOR 7207M (BODY BUILDER HARNESS)	
3838727C1	12-WAY CONNECTOR 7207 (FEMALE)
3589992C1	12-WAY CONNECTOR LOCK
3518961C1	WIRE TERMINAL 18/20-GAUGE (MALE)
3527276C1	CONNECTOR CAVITY PLUG

Connector Parts Associated with 12XAT Feature
(Medium Vocational Series)

How to Test This Feature:

Note: This feature's programmable parameters are set and tested using the Cummins Engine INSITE Software package.

References:
Refer to the applicable International® Circuit Diagrams and Service Manuals.

18.13. 12XBM: ENGINE CONTROL, REMOTE MOUNTED Provision for; Includes Wiring for Body Builder Installation of PTO Controls and Starter Lockout; with Ignition Switch Control for Cummins B6.7 and L9 Engines.

Feature Applicability to Vehicle Platforms:

- Heavy Vocational (HV)
- Medium Vocational (MV)

Extended Description: Feature code 12XBM provides an engine interface connector to facilitate remote engine speed control with B6.7 or L9 Cummins engines. The interface connector is a 12-way connector located in the engine compartment on the driver's side. Please reference circuit diagrams and additional service documentation on the correct pinout of the interface connector as it may vary based on truck model.

Note: This interface connector does not provide a Vehicle Speed Signal circuit. A vehicle Speed Signal is available at the TCM connector, on trucks with automatic transmissions. Refer to the circuit diagrams for connector and pin information. Feature code 12VYL may also be ordered on trucks with automatic transmissions. It provides a Vehicle Speed Signal circuit coiled behind the center of the instrument panel for body builder use. A separate Vehicle Speed Sensor or a sensor with 2 pigtails may need to be installed by the body builder on trucks with a manual transmission if a Vehicle Speed Signal is required.

System Block Diagram:

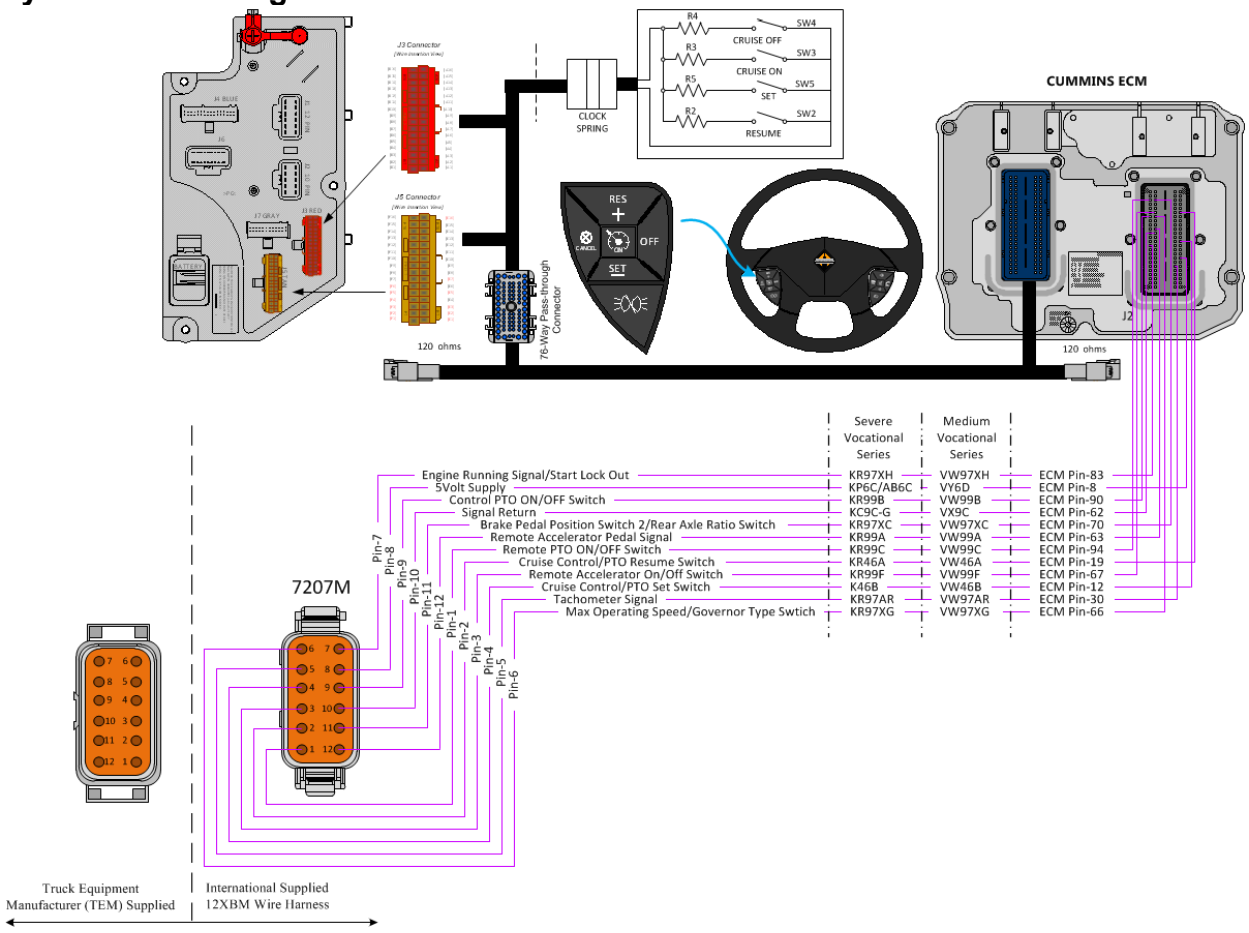

Cummins ISB/B6.7 or ISL/L9

18.13.1. 12XBM: Severe and Medium Vocational Series Vehicle Wiring Diagrams:

18.13.1.1. 12XBM: Preset Set Speed - Wiring Diagram:

Wiring Information for CUMMINS
12XBM DuraStar/WorkStar with B6.7/L9 Engine
(Preferred Harness)

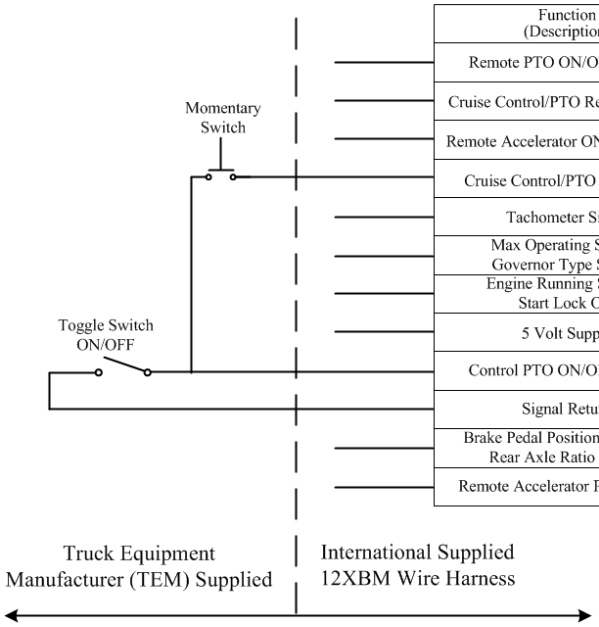

Function (Description)	Pinout Locations: ECM 6000 Pin Location	Pinout Locations: 7207 Connector Cavity	HV: Circuit Number	MV: Circuit Number
Remote PTO ON/OFF Switch	94	1	KR99C	VW99C
Cruise Control/PTO Resume Switch	19	2	KR46A	VW46A
Remote Accelerator ON/OFF Switch	67	3	KR99F	VW99F
Cruise Control/PTO Set Switch	12	4	K46B	VW46B
Tachometer Signal	30	5	KR97AR	VW97AR
Max Operating Speed / Governor Type Switch	66	6	KR97XG	VW97XG
Engine Running Signal / Start Lock Out	83	7	KR97XH	VW97XH
5 Volt Supply	8	8	KP6C/AB6C	VY6D
Control PTO ON/OFF Switch	90	9	KR99B	VW99B
Signal Return	62	10	KC9C-G	VX9C
Brake Pedal Position Switch 2 / Rear Axle Ratio Switch	70	11	KR97XC	VW97XC
Remote Accelerator Pedal Signal	63	12	KR99A	VW99A

Wiring Diagram for 12XBM Preset Set Speed Function
(Severe & Medium Vocational Series)

18.13.1.2. 12XBM: Preset Resume Speed - Wiring Diagram:

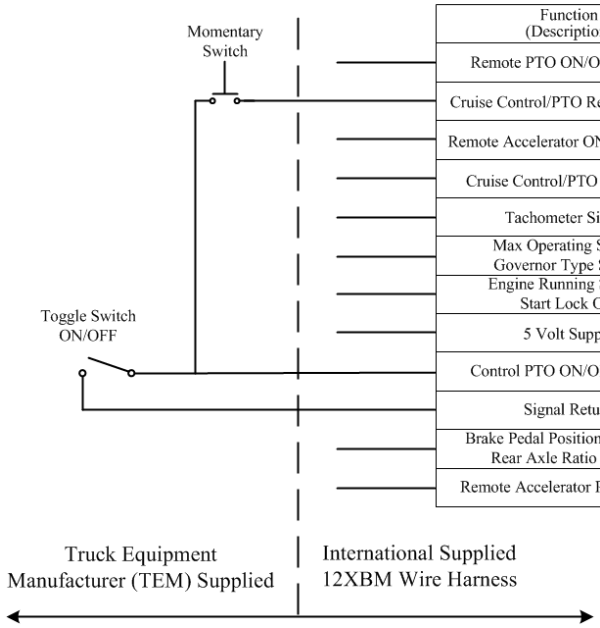

Function (Description)	Pinout Locations: ECM 6000 Pin Location	Pinout Locations: 7207 Connector Cavity	HV: Circuit Number	MV: Circuit Number
Remote PTO ON/OFF Switch	94	1	KR99C	VW99C
Cruise Control/PTO Resume Switch	19	2	KR46A	VW46A
Remote Accelerator ON/OFF Switch	67	3	KR99F	VW99F
Cruise Control/PTO Set Switch	12	4	K46B	VW46B
Tachometer Signal	30	5	KR97AR	VW97AR
Max Operating Speed / Governor Type Switch	66	6	KR97XG	VW97XG
Engine Running Signal / Start Lock Out	83	7	KR97XH	VW97XH
5 Volt Supply	8	8	KP6C/AB6C	VY6D
Control PTO ON/OFF Switch	90	9	KR99B	VW99B
Signal Return	62	10	KC9C-G	VX9C
Brake Pedal Position Switch 2 / Rear Axle Ratio Switch	70	11	KR97XC	VW97XC
Remote Accelerator Pedal Signal	63	12	KR99A	VW99A

Wiring Diagram for 12XBM Preset Resume Speed Function
(Severe & Medium Vocational Series)

18.13.1.3. 12XBM: Preset Set Resume - Wiring Diagram:

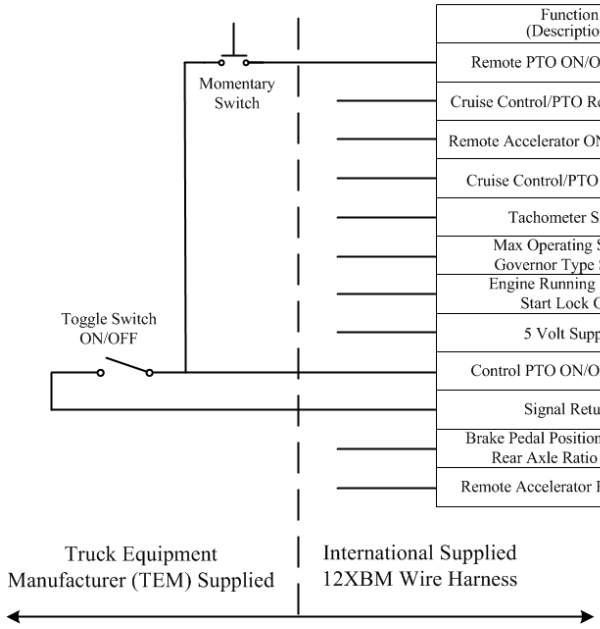

Function (Description)	Pinout Locations: ECM 6000 Pin Location	Pinout Locations: 7207 Connector Cavity	HV: Circuit Number	MV: Circuit Number
Remote PTO ON/OFF Switch	94	1	KR99C	VW99C
Cruise Control/PTO Resume Switch	19	2	KR46A	VW46A
Remote Accelerator ON/OFF Switch	67	3	KR99F	VW99F
Cruise Control/PTO Set Switch	12	4	K46B	VW46B
Tachometer Signal	30	5	KR97AR	VW97AR
Max Operating Speed / Governor Type Switch	66	6	KR97XG	VW97XG
Engine Running Signal / Start Lock Out	83	7	KR97XH	VW97XH
5 Volt Supply	8	8	KP6C/AB6C	VY6D
Control PTO ON/OFF Switch	90	9	KR99B	VW99B
Signal Return	62	10	KC9C-G	VX9C
Brake Pedal Position Switch 2 / Rear Axle Ratio Switch	70	11	KR97XC	VW97XC
Remote Accelerator Pedal Signal	63	12	KR99A	VW99A

Wiring Diagram for 12XBM Preset Set Resume Speed Function
(Severe & Medium Vocational Series)

18.13.1.4. 12XBM: Variable Set Resume - Wiring Diagram:

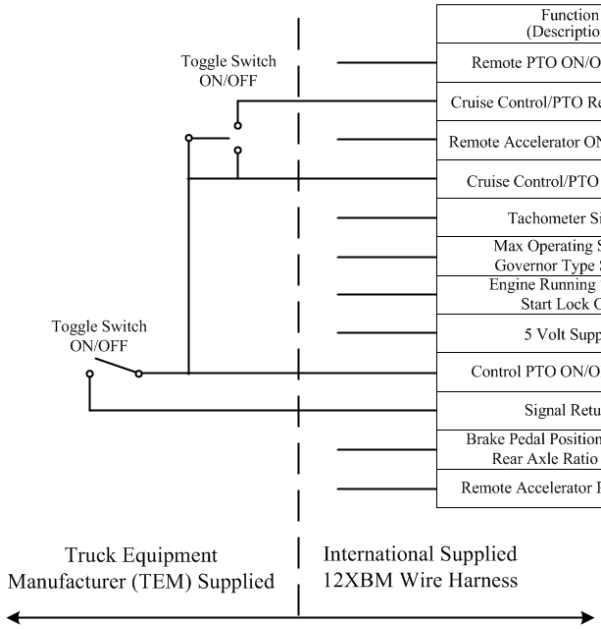

Function (Description)	Pinout Locations: ECM 6000 Pin Location	Pinout Locations: 7207 Connector Cavity	HV: Circuit Number	MV: Circuit Number
Remote PTO ON/OFF Switch	94	1	KR99C	VW99C
Cruise Control/PTO Resume Switch	19	2	KR46A	VW46A
Remote Accelerator ON/OFF Switch	67	3	KR99F	VW99F
Cruise Control/PTO Set Switch	12	4	K46B	VW46B
Tachometer Signal	30	5	KR97AR	VW97AR
Max Operating Speed / Governor Type Switch	66	6	KR97XG	VW97XG
Engine Running Signal / Start Lock Out	83	7	KR97XH	VW97XH
5 Volt Supply	8	8	KP6C/AB6C	VY6D
Control PTO ON/OFF Switch	90	9	KR99B	VW99B
Signal Return	62	10	KC9C-G	VX9C
Brake Pedal Position Switch 2 / Rear Axle Ratio Switch	70	11	KR97XC	VW97XC
Remote Accelerator Pedal Signal	63	12	KR99A	VW99A

Wiring Diagram for 12XBM Variable Set Resume Speed Function
(Severe & Medium Vocational Series)

18.13.1.5. 12XBM: Variable Pedal Control - Wiring Diagram:

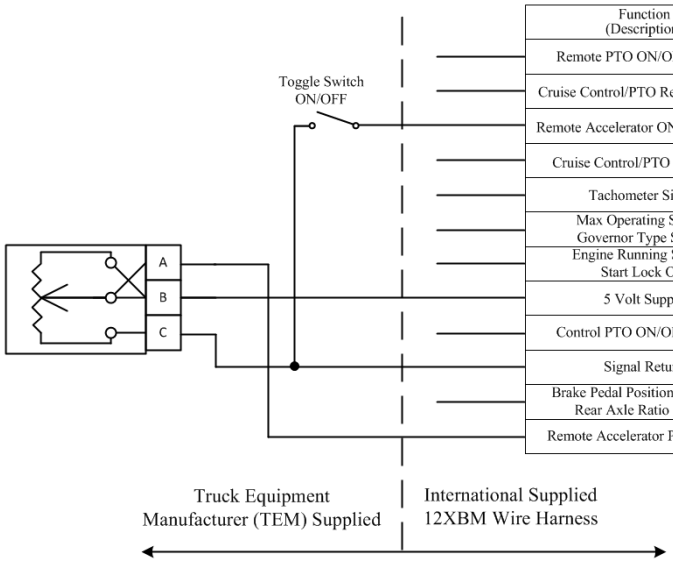

Function (Description)	Pinout Locations: ECM 6000 Pin Location	Pinout Locations: 7207 Connector Cavity	HV: Circuit Number	MV: Circuit Number
Remote PTO ON/OFF Switch	94	1	KR99C	VW99C
Cruise Control/PTO Resume Switch	19	2	KR46A	VW46A
Remote Accelerator ON/OFF Switch	67	3	KR99F	VW99F
Cruise Control/PTO Set Switch	12	4	K46B	VW46B
Tachometer Signal	30	5	KR97AR	VW97AR
Max Operating Speed / Governor Type Switch	66	6	KR97XG	VW97XG
Engine Running Signal / Start Lock Out	83	7	KR97XH	VW97XH
5 Volt Supply	8	8	KP6C/AB6C	VY6D
Control PTO ON/OFF Switch	90	9	KR99B	VW99B
Signal Return	62	10	KC9C-G	VX9C
Brake Pedal Position Switch 2 / Rear Axle Ratio Switch	70	11	KR97XC	VW97XC
Remote Accelerator Pedal Signal	63	12	KR99A	VW99A

Wiring Diagram for 12XBM Variable Pedal Control Function
(Severe & Medium Vocational Series)

18.13.1.6. 12XBM: Auxiliary Tachometer - Wiring Diagram:

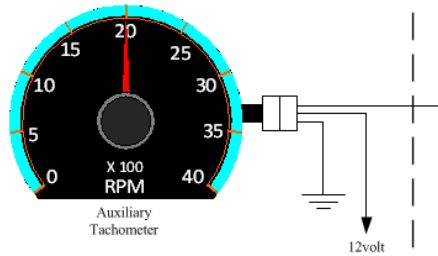

Function (Description)	Pinout Locations: ECM 6000 Pin Location	Pinout Locations: 7207 Connector Cavity	HV: Circuit Number	MV: Circuit Number
Remote PTO ON/OFF Switch	94	1	KR99C	VW99C
Cruise Control/PTO Resume Switch	19	2	KR46A	VW46A
Remote Accelerator ON/OFF Switch	67	3	KR99F	VW99F
Cruise Control/PTO Set Switch	12	4	K46B	VW46B
Tachometer Signal	30	5	KR97AR	VW97AR
Max Operating Speed / Governor Type Switch	66	6	KR97XG	VW97XG
Engine Running Signal / Start Lock Out	83	7	KR97XH	VW97XH
5 Volt Supply	8	8	KP6C/AB6C	VY6D
Control PTO ON/OFF Switch	90	9	KR99B	VW99B
Signal Return	62	10	KC9C-G	VX9C
Brake Pedal Position Switch 2 / Rear Axle Ratio Switch	70	11	KR97XC	VW97XC
Remote Accelerator Pedal Signal	63	12	KR99A	VW99A

Truck Equipment Manufacturer (TEM) Supplied

International Supplied 12XBM Wire Harness

Wiring Diagram for 12XBM Auxiliary Tachometer Function
(Severe & Medium Vocational Series)

18.13.1.7. 12XBM: Engine or Vehicle Speed Switch - Wiring Diagram:

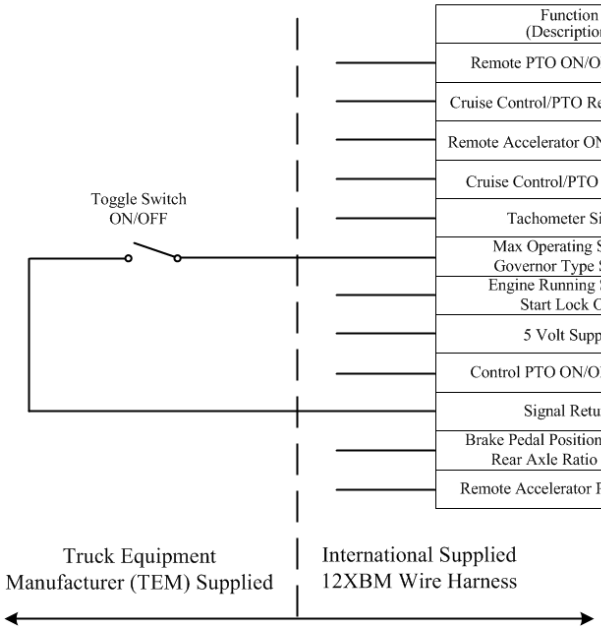

Function (Description)	Pinout Locations: ECM 6000 Pin Location	Pinout Locations: 7207 Connector Cavity	HV: Circuit Number	MV: Circuit Number
Remote PTO ON/OFF Switch	94	1	KR99C	VW99C
Cruise Control/PTO Resume Switch	19	2	KR46A	VW46A
Remote Accelerator ON/OFF Switch	67	3	KR99F	VW99F
Cruise Control/PTO Set Switch	12	4	K46B	VW46B
Tachometer Signal	30	5	KR97AR	VW97AR
Max Operating Speed / Governor Type Switch	66	6	KR97XG	VW97XG
Engine Running Signal / Start Lock Out	83	7	KR97XH	VW97XH
5 Volt Supply	8	8	KP6C/AB6C	VY6D
Control PTO ON/OFF Switch	90	9	KR99B	VW99B
Signal Return	62	10	KC9C-G	VX9C
Brake Pedal Position Switch 2 / Rear Axle Ratio Switch	70	11	KR97XC	VW97XC
Remote Accelerator Pedal Signal	63	12	KR99A	VW99A

Wiring Diagram for 12XBM Engine or Vehicle Speed Switch Function
(Severe & Medium Vocational Series)

18.13.1.8. 12XBM: Accelerator / Brake Override or Rear Axle Ratio Switch - Wiring Diagram:

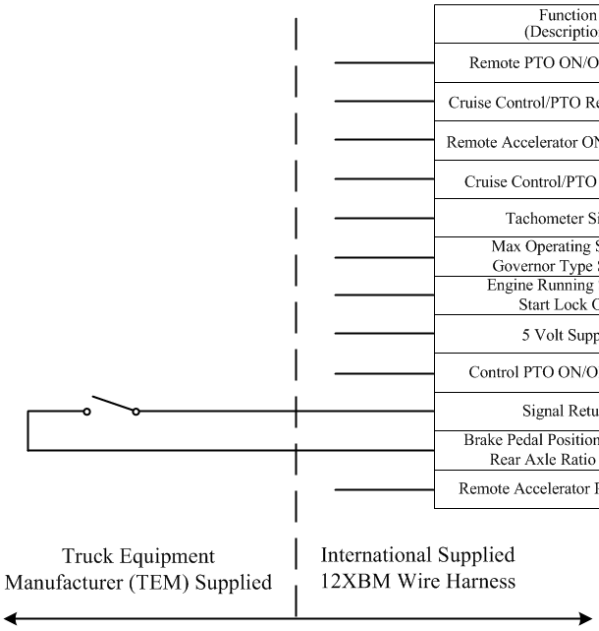

Function (Description)	Pinout Locations: ECM 6000 Pin Location	Pinout Locations: 7207 Connector Cavity	HV: Circuit Number	MV: Circuit Number
Remote PTO ON/OFF Switch	94	1	KR99C	VW99C
Cruise Control/PTO Resume Switch	19	2	KR46A	VW46A
Remote Accelerator ON/OFF Switch	67	3	KR99F	VW99F
Cruise Control/PTO Set Switch	12	4	K46B	VW46B
Tachometer Signal	30	5	KR97AR	VW97AR
Max Operating Speed / Governor Type Switch	66	6	KR97XG	VW97XG
Engine Running Signal / Start Lock Out	83	7	KR97XH	VW97XH
5 Volt Supply	8	8	KP6C/AB6C	VY6D
Control PTO ON/OFF Switch	90	9	KR99B	VW99B
Signal Return	62	10	KC9C-G	VX9C
Brake Pedal Position Switch 2 / Rear Axle Ratio Switch	70	11	KR97XC	VW97XC
Remote Accelerator Pedal Signal	63	12	KR99A	VW99A

Wiring Diagram for 12XBM Accelerator / Brake Override or Rear Axle Ratio Function
(Severe & Medium Vocational Series)

18.13.1.9. 12XBM: Starter Lockout - Wiring Diagram:

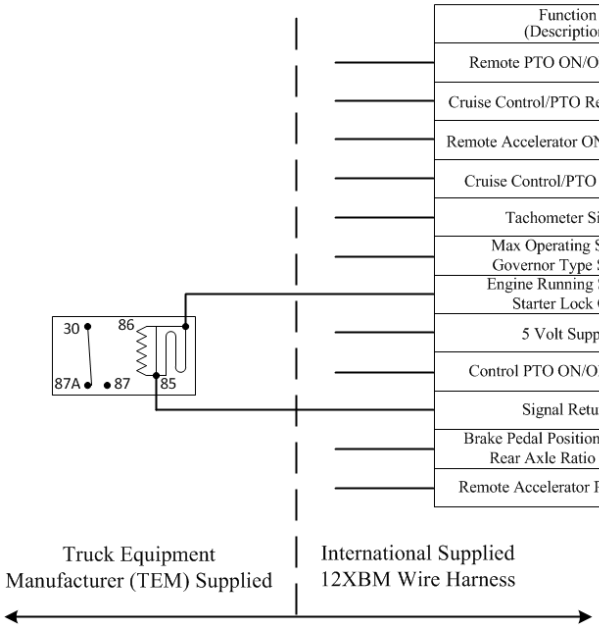

Function (Description)	Pinout Locations: ECM 6000 Pin Location	Pinout Locations: 7207 Connector Cavity	HV: Circuit Number	MV: Circuit Number
Remote PTO ON/OFF Switch	94	1	KR99C	VW99C
Cruise Control/PTO Resume Switch	19	2	KR46A	VW46A
Remote Accelerator ON/OFF Switch	67	3	KR99F	VW99F
Cruise Control/PTO Set Switch	12	4	K46B	VW46B
Tachometer Signal	30	5	KR97AR	VW97AR
Max Operating Speed / Governor Type Switch	66	6	KR97XG	VW97XG
Engine Running Signal / Starter Lock Out	83	7	KR97XH	VW97XH
5 Volt Supply	8	8	KP6D	VY6D
Control PTO ON/OFF Switch	90	9	KR99B	VW99B
Signal Return	62	10	KC9C-G	VX9C
Brake Pedal Position Switch 2 / Rear Axle Ratio Switch	70	11	KR97XC	VW97XC
Remote Accelerator Pedal Signal	63	12	KR99A	VW99A

Wiring Diagram for 12XBM Starter Lockout Function
(Severe & Medium Vocational Series)

Parts Associated with This Feature:

PART NUMBER	DESCRIPTION
CUMMINS 96-WAY ENGINE CONTROLLER CONNECTORS	
COMES ON ENGINE FROM CUMMINS	J1 CONNECTOR BODY (ENGINE)
3945694C1	96-WAY (J2) CHASSIS CONNECTOR BODY
3743666C1	WIRE TERMINAL 18-GUAGE (GOLD PLATED)
3743668C1	WIRE TERMINAL 20-GUAGE (GOLD PLATED)
12-WAY CONNECTOR 7207M (ENGINE EXTENTION HARNESS)	
3586750C1	12-WAY CONNECTOR BODY 7207 (MALE)
3553460C1	12-WAY CONNECTOR LOCK
3518963C1	WIRE TERMINAL 18/20-GAUGE (FEMALE)
3527276C1	CONNECTOR CAVITY PLUG
12-WAY MATING CONNECTOR FOR 7207M (BODY BUILDER HARNESS)	
3838727C1	12-WAY CONNECTOR 7207 (FEMALE)
3589992C1	12-WAY CONNECTOR LOCK
3518961C1	WIRE TERMINAL 18/20-GAUGE (MALE)
3527276C1	CONNECTOR CAVITY PLUG

Connector Parts Associated with 12XBM Feature
(Severe & Medium Vocational Series)

Picture/s:



12-Way Connector (7207M) Center of Picture

How to Test This Feature:

Note: This feature's programmable parameters are set and tested using the Cummins Engine INSITE Software package.

References:
Refer to the applicable International® Circuit Diagrams and Service Manuals.

18.14. 60AJA: BDY INTG, THROTTLE CONTROL Accommodation for Single Customer-Mounted External Engine Speed Control Switch, Programmable Mode for Various Switch Actions and Engine Speed Control Option; Useable Only While Vehicle is Stopped, and the Park Brake is Applied (requires one Remote Power Module (RPM) input).

Feature Applicability to Vehicle Platforms:

- Heavy Vocational (HV)
- Medium Vocational (MV)
- Heavy Extreme (HX) 2021 and Newer

Extended Description: A Truck Equipment Manufacturer (TEM) or customer-mounted single remote center stable, momentary switch is used to control engine speed from a remote location. When the operator moves the switch to the up position, the switch should be wired to supply 12 volts to the RPM input to activate Remote engine speed control preset 1. When the operator returns the switch to the center position or stable position, the engine will remain at preset 1 until the operator moves the switch to the down position. In the down position, the switch is wired to supply a Ground (GND) to the RPM input to deactivate Remote engine speed control preset 1. When the operator returns the switch to the center position or stable position, the engine will remain at idle.

This feature is commonly used for the recovery application or any application that needs to remotely elevate engine speed to a single preset and maintain the engine speed until the operator brings the engine back to idle through a second action. Engine preset 1 must be programmed in the Engine Control Module (ECM) parameters with the appropriate service tool. This feature also requires that feature 12VXU be ordered on the vehicle or in-cab stationary Preset throttle control be set up with the appropriate engine service tool if feature 60AJA is installed in the field.

System Block Diagram:

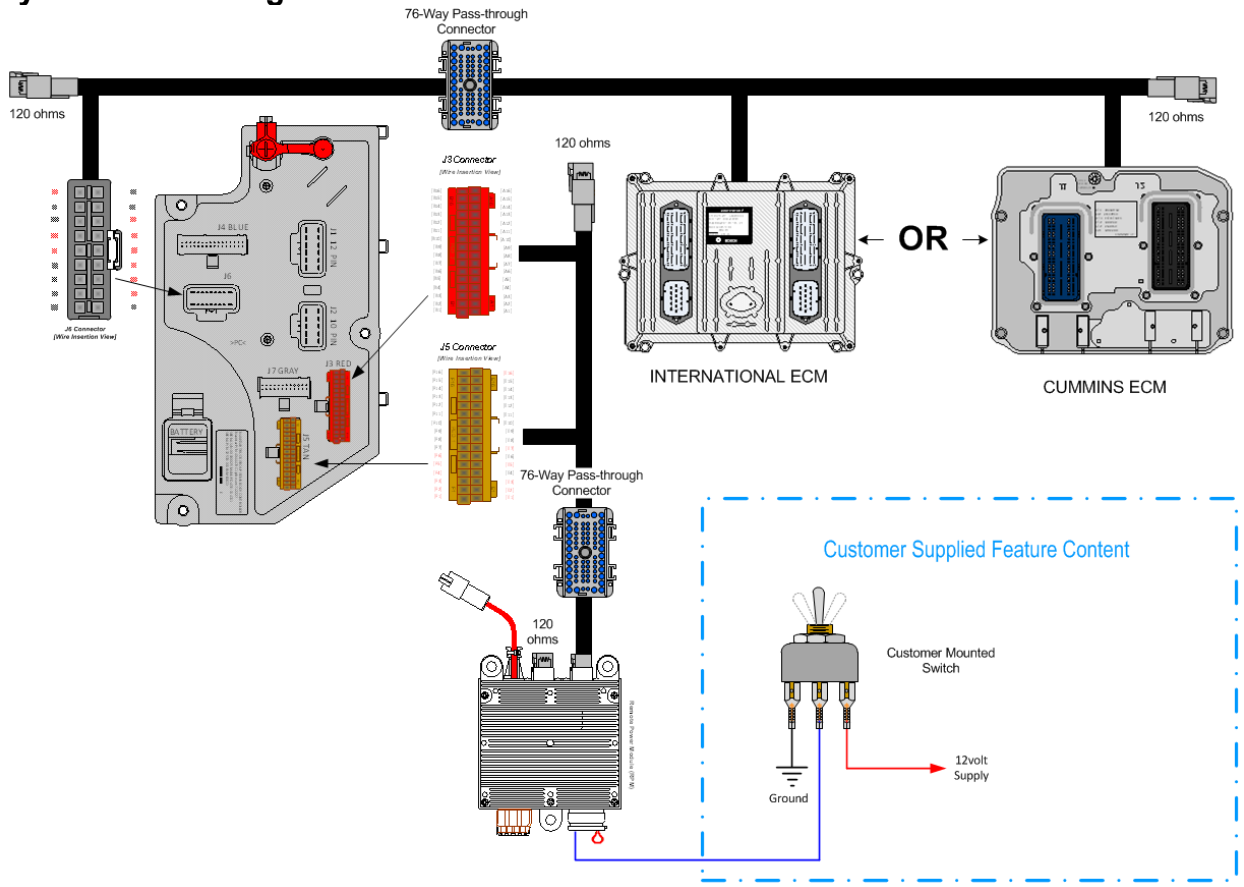

Body Controller Software Feature Codes:

- 597322 - BCM PROG, EXTERNAL ENGINE SPD CONTROL

Body Controller Software Feature Code Parameters:

Parameter	ID	Description	Default	Units	Min	Max	Step
TEM_Ext_Eng_Speed_Control_Mode	2035	This parameter sets the mode of operation for the TEM External Engine Speed Control feature	1	List	0	3	1
TEM_Ext_Eng_Spd_Ctrl_PTO_Ilock	2036	If this parameter is a one, external engine speed controls will be interlocked to PTO request.	0	On/off	0	1	1
TEM_Ext_Eng_Spd_Ctrl_Active_State	2158	This is the active state for the external engine speed control switch	3	List	0	1	3

Parameter Definitions:

- **TEM_Ext_Eng_Speed_Control_Mode** – This parameter sets the mode of operation for the TEM External Engine Speed Control feature.
  0 – Remote engine speed control does not function
  1 – 12 Volts on the engine speed control input causes engine to ramp; ground causes engine to return to idle.
  2 – Pulling the engine speed control input momentarily (pulled and released) to its active state causes the engine to ramp; Another momentary active state transition causes engine to return to idle
  3 – Engine will ramp for only as long as the engine speed control input is held in its active state.
- **TEM_Ext_Eng_Spd_Ctrl_PTO_Ilock** – This parameter sets the optional PTO interlock mode ON or OFF. If set ON, the Remote engine speed control preset-1 will be interlocked to all International® pre-engineered PTO features that use a center panel switch. This means that the remote engine speed control will only be allowed to operate if the PTO is being requested to engage. If this parameter is not set, the engine speed control will operate regardless of the PTO request.
- **TEM_Ext_Eng_Spd_Ctrl_Active_State** – This is the active state for the external engine speed control switch.
  0 – RPM input floating (not grounded or at 12 Volts
  1 – RPM input grounded.
  2 – NOT USED
  3 - RPM input 12 Volts

Note/s About Possible Software Feature Conflicts:

- Only ONE External engine speed feature can be configured on a single vehicle.

Parts Associated with This Feature:

PART NUMBER	DESCRIPTION
3677559C1	23-WAY CONNECTOR
1698937C1	16, 18, 20-GAUGE TERMINAL
1688285C1	CAVITY PLUG

RPM 23-WAY CONNECTOR

How to Test This Feature:

1. Stationary Remote engine speed control preset-1 Activation; Start engine, set park brake, transmission
In neutral or park, vehicle speed is less than one MPH, and take the switch to the up position, or supply.
12volts on the input pin labeled Remote_Engine_Speed_Sw_Input, or use Diamond Logic® Builder to
Force the RPM input pin to the 12-volt state.
2. Verify the RPM input labeled Remote_Engine_Speed_Sw_Input (pin position specified Diamond Logic® Builder software) is receiving GND as long as the switch is closed.
3. Verify that the engine ramps to the first preset speed.
4. If engine does not ramp to the first preset speed, check engine programming to verify that the correct
engine speed control parameters are set.
5. Deactivate the remote engine speed control switch (release GND).
6. Verify the RPM input labeled Remote_Engine_Speed_Sw_Input (pin position specified Diamond Logic® Builder software) is an open circuit when switch is in the center stable position.
7. Verify that the engine returns to idle.

Note: This feature uses body controller-based software controls which can be diagnosed with The International® Diamond Logic® Builder software (see local dealer if not owned).

References:
Refer to the applicable International® Circuit Diagrams and Service Manuals.

18.15. 60AJE: BDY INTG, THROTTLE CONTROL Accommodation for On Demand Engine Speed for Single Customer-Mounted Pressure Switch, Programmable Mode for Various Switch Actions, Useable Only While Vehicle is Stopped, and the Park Brake is Applied (requires one RPM input).

Feature Applicability to Vehicle Platforms:

- Heavy Vocational (HV)
- Medium Vocational (MV)
- Heavy Extreme (HX) 2021 and Newer

Extended Description: A Truck Equipment Manufacturer (TEM) or customer-mounted single remote momentary or latched switch or normally open pressure switch is used to control engine speed from a remote location. When the operator moves the switch to the up position or the pressure switch closes, the switch supplies GND or 12-volts to the RPM input to activate Engine Preset 1 and ramp the engine to it. The engine will continue to ramp to Engine Speed Preset 1 as long as the switch continues to supply either GND or 12-volts to the RPM input. When the operator moves the switch to the down position or the switch opens, the switch removes the GND or 12-volts to the RPM input to deactivate engine speed control preset 1 returning the engine to idle.

This feature is used for various applications that need to remotely elevate engine speed to a single preset and maintain the engine speed until the operator or system brings the engine back to idle. Engine speed control is maintained on demand with this feature. Engine preset 1 must be programmed in the Engine Control Module (ECM) parameters with the appropriate service tool. This feature also requires that feature 12VXU be ordered on the vehicle or in-cab stationary Preset throttle control be set up with the appropriate engine service tool if feature 60AJE is installed in the field.

System Block Diagram:

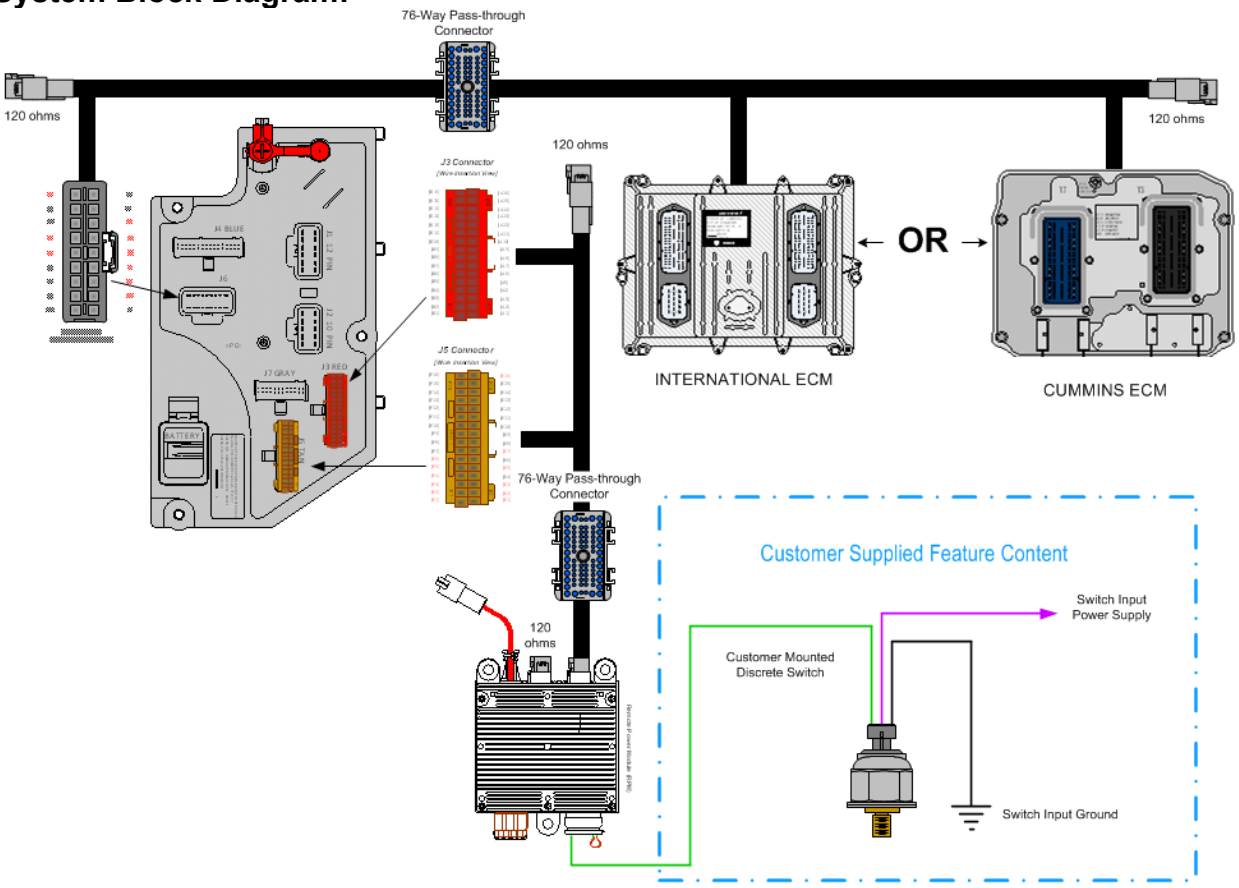

Body Controller Software Feature Codes:

- 597321 - BCM PROG, EXT ENGINE SPD CONT'L for Demand Engine Speed with Utility Application

Body Controller Software Feature Code Parameters:

Parameter	ID	Description	Default	Units	Min	Max	Step
TEM_Ext_Eng_Speed_Control_Mode	2035	This parameter sets the mode of operation for the TEM External Engine Speed Control feature	3	List	0	3	1
TEM_Ext_Eng_Spd_Ctrl_PTO_Ilock	2036	If this parameter is a one, external engine speed controls will be interlocked to PTO request.	0	On/off	0	1	1
TEM_Ext_Eng_Spd_Ctrl_Active_State	2158	This is the active state for the external engine speed control switch	1	List	0	1	3

Parameter Definitions:

- **TEM_Ext_Eng_Speed_Control_Mode** – This parameter sets the mode of operation for the TEM External Engine Speed Control feature.
  0 – Remote engine speed control does not function
  1 – 12 Volts on the engine speed control input causes engine to ramp; ground causes engine to return to idle.
  2 – Pulling the engine speed control input momentarily (pulled and released) to its active state causes the engine to ramp; Another momentary active state transition causes engine to return to idle
  3 – Engine will ramp for only as long as the engine speed control input is held in its active state.
- **TEM_Ext_Eng_Spd_Ctrl_PTO_Ilock** – This parameter sets the optional PTO interlock mode ON or OFF. If set ON, the Remote engine speed control preset 1 will be interlocked to all International® pre-engineered PTO features that use a center panel switch. This means that the remote engine speed control will only be allowed to operate if the PTO is being requested to engage. If this parameter is not set, the engine speed control will operate regardless of the PTO request.
- **TEM_Ext_Eng_Spd_Ctrl_Active_State** – This is the active state for the external engine speed control switch.
  0 – RPM input floating (not grounded or at 12 Volts
  1 – RPM input grounded.
  2 – NOT USED
  3 - RPM input 12 Volts

Note/s About Possible Software Feature Conflicts:
597265, 597322 or 597323 will conflict with 597321.
597324 may require 597321

Parts Associated with This Feature:

PART NUMBER	DESCRIPTION
RPM 23-WAY CONNECTOR	
3677559C1	23-WAY CONNECTOR
1698937C1	16, 18, 20-GAUGE TERMINAL
1688285C1	CAVITY PLUG

REMOTE POWER MODULE 23-WAY CONNECTOR

How to Test This Feature:
1. Stationary Remote engine speed control preset-1 Activation; Start engine, set park brake, transmission in neutral or park, vehicle speed is less than one MPH, and take the switch to the closed position, or supply 12volts or GND on the input pin labeled Remote_Engine_Speed_Sw_Input, or use Diamond Logic® Builder to Force the RPM input pin to the 12-volt or GND state.
2. Verify the RPM input labeled Remote_Engine_Speed_Sw_Input (pin position specified Diamond Logic® Builder software) is receiving GND or 12-volts as long as the switch is closed.
3. Verify that the engine ramps to the first preset speed.
4. If engine does not ramp to the first preset speed, check the engine programming to verify that the
correct engine speed control parameters are set using (NED) or (INSITE) software.
5. Deactivate the remote engine speed control switch (release GND).
6. Verify the RPM input labeled Remote_Engine_Speed_Sw_Input (pin position specified Diamond Logic® Builder software) is an open circuit when switch is in the down or open position.
7. Verify that the engine returns to idle.

Note: This feature uses body controller-based software controls which can be diagnosed with The International® Diamond Logic® Builder software (see local dealer if not owned).

References:
Refer to the applicable International® Circuit Diagrams and Service Manuals.

18.16. 60AJG: BDY INTG, THROTTLE CONTROL Accommodation for Single Customer-Mounted External Engine Speed Control Switch, for Utility Applications, Programmable Mode for Various Switch Actions and Engine Speed Control Option, Only with Vehicle Stopped and Park Brake is Applied (requires one RPM input).

Feature Applicability to Vehicle Platforms:

- Heavy Vocational (HV)
- Medium Vocational (MV)
- Heavy Extreme (HX) 2021 and Newer

Extended Description: A Truck Equipment Manufacturer or customer-mounted single momentary switch is used to control engine speed from a remote location. When the operator moves the switch to the up position or the switch closes for the first time, the switch supplies GND or 12-volts to the RPM input which activates Engine Speed Preset 1. When the operator moves the switch to the down position or the switch opens, the engine will remain at Engine Speed Preset 1. When the operator moves the switch to the up position or the switch closes for the second time, engine speed control preset 1 is deactivated returning the engine to idle.

This feature is commonly used for the utility application to remotely elevate engine speed to a single preset and maintain the engine speed until the operator brings the engine back to idle through a second action. Engine preset 1 must be programmed in the Engine Control Module (ECM) parameters with the appropriate service tool. This feature also requires that feature 12VXU be ordered on the vehicle or in-cab stationary Preset throttle control be set up with the appropriate engine service tool if feature 60AJG is installed in the field.

System Block Diagram:

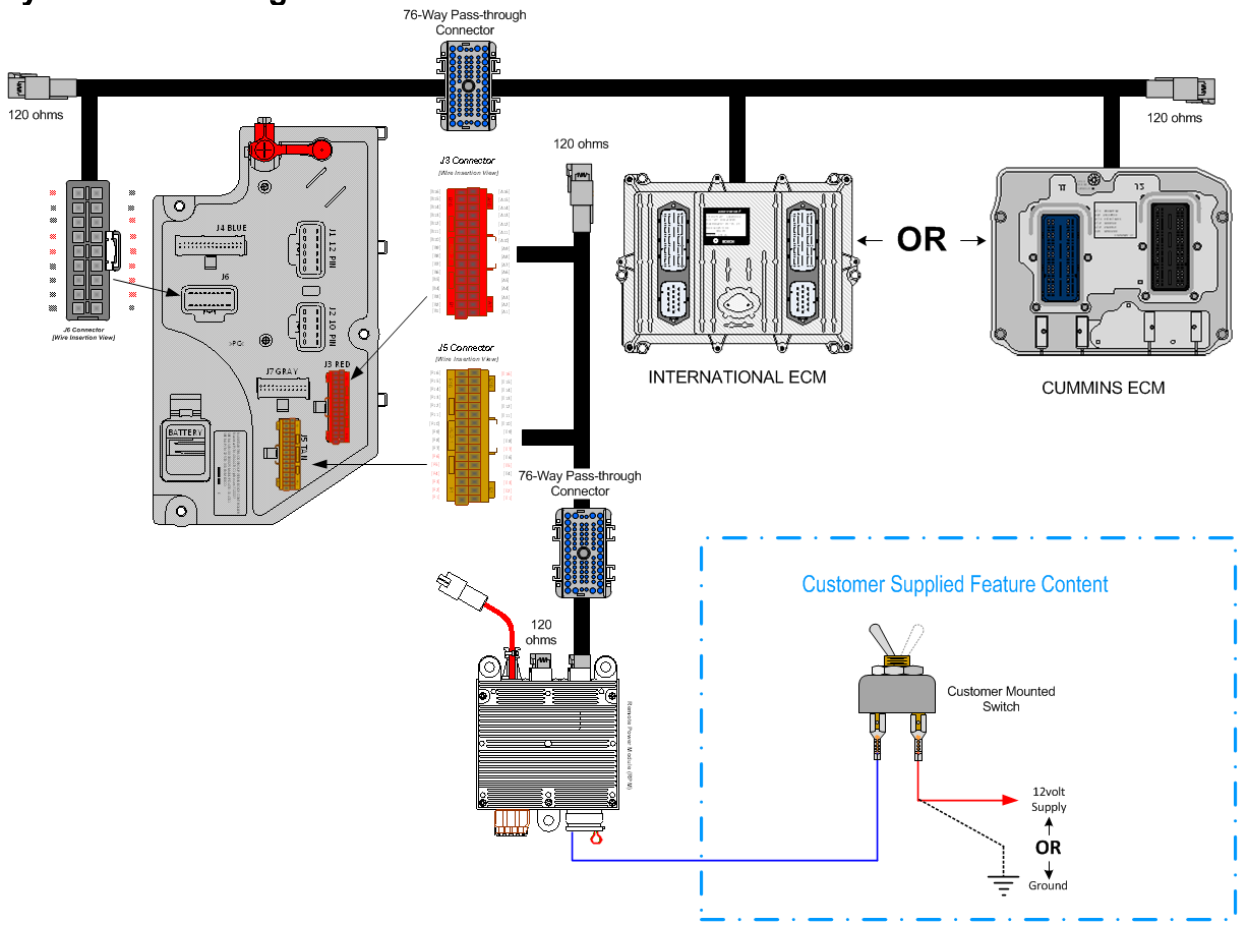

Body Controller Software Feature Codes:

- 597323 - BCM PROG, EXT ENGINE SPD CONT'L with Utility Application

Body Controller Software Feature Code Parameters:

Parameter	ID	Description	Default	Units	Min	Max	Step
TEM_Ext_Eng_Speed_Control_Mode	2035	This parameter sets the mode of operation for the TEM External Engine Speed Control feature	2	List	0	3	1
TEM_Ext_Eng_Spd_Ctrl_PTO_Ilock	2036	If this parameter is a one, external engine speed controls will be interlocked to PTO request.	0	On/off	0	1	1
TEM_Ext_Eng_Spd_Ctrl_Active_State	2158	This is the active state for the external engine speed control switch	1	List	0	1	3

Parameter Definitions:

- **TEM_Ext_Eng_Speed_Control_Mode** – This parameter sets the mode of operation for the TEM External Engine Speed Control feature.
  0 – Remote engine speed control does not function
  1 – 12 Volts on the engine speed control input causes engine to ramp; ground causes engine to return to idle.
  2 – Pulling the engine speed control input momentarily (pulled and released) to its active state causes the engine to ramp; Another momentary active state transition causes engine to return to idle
  3 – Engine will ramp for only as long as the engine speed control input is held in its active state.
- **TEM_Ext_Eng_Spd_Ctrl_PTO_Ilock** – This parameter sets the optional PTO interlock mode ON or OFF. If set ON, the Remote engine speed control preset-1 will be interlocked to all International® pre-engineered PTO features that use a center panel switch. This means that the remote engine speed control will only be allowed to operate if the PTO is being requested to engage. If this parameter is not set, the engine speed control will operate regardless of the PTO request.
- **TEM_Ext_Eng_Spd_Ctrl_Active_State** – This is the active state for the external engine speed control switch.
  0 – RPM input floating (not grounded or at 12 Volts
  1 – RPM input grounded.
  2 – NOT USED
  3 - RPM input 12 Volts

Note/s About Possible Software Feature Conflicts:
597265, 597321 or 597322 will conflict with 597323.
597324 may require 597323

Parts Associated with This Feature:

PART NUMBER	DESCRIPTION
RPM 23-WAY CONNECTOR	
3677559C1	23-WAY CONNECTOR
1698937C1	16, 18, 20-GAUGE TERMINAL
1688285C1	CAVITY PLUG

REMOTE POWER MODULE 23-WAY CONNECTOR

How to Test This Feature:
1. Stationary Remote engine speed control preset-1 Activation; Start engine, set park brake, transmission in neutral or park, vehicle speed is less than one MPH, and take the switch to the closed position, or supply 12-volts or GND on the input pin labeled Remote_Engine_Speed_Sw_Input, or use Diamond Logic® Builder to Force the RPM input pin to the 12-volt or GND state.
2. Verify the RPM input labeled Remote_Engine_Speed_Sw_Input (pin position specified Diamond Logic® Builder software) is receiving GND or 12-volts as long as the switch is closed.
3. Verify that the engine ramps to the first preset speed.
4. If engine does not ramp to the first preset speed, check the engine programming to verify that the correct engine speed control parameters are set using (NED) or (INSITE) software.
5. Deactivate the remote engine speed control switch (release GND).
6. Verify the RPM input labeled Remote_Engine_Speed_Sw_Input (pin position specified Diamond Logic® Builder software) is an open circuit when switch is in the down or open position.
7. Verify that the engine returns to idle.

Note: This feature uses body controller-based software controls which can be diagnosed with The International® Diamond Logic® Builder software (see local dealer if not owned).

References:
Refer to the applicable International® Circuit Diagrams and Service Manuals.

18.17. 60AJH: BDY INTG, THROTTLE CONTROL for Dual Function Input, for Utility Applications, Remote Throttle Control When Engine is Running, and Activating Output for Emergency Power When the Engine is Not Engaged; Useable Only When Vehicle is Stopped, and Park Brake is Applied (requires one RPM input and output).

Feature Applicability to Vehicle Platforms:

- Heavy Vocational (HV)
- Medium Vocational (MV)
- Heavy Extreme (HX) 2021 and Newer

Extended Description: Stationary Remote engine speed control preset 1 is interlocked to park brake and transmission in neutral or park and vehicle speed and engine running or optional PTO interlock; when engine is not running, the GND input will turn on a 12-volt, 20-Ampere (AMP) RPM output used to control an emergency pump.

A Truck Equipment Manufacturer or customer-mounted single momentary switch is used to control engine speed from a remote location. When the operator moves the switch to the up position or the switch closes for the first time, the switch supplies GND or 12-volts to the RPM input which activates Engine Speed Preset 1. When the operator moves the switch to the down position or the switch opens, the engine will remain at Engine Speed Preset 1. When the operator moves the switch to the up position or the switch closes for the second time, engine speed control preset 1 is deactivated returning the engine to idle. When the engine is not running and the operator moves the switch to the up position and holds or the switch closes and holds, the switch will supply a GND signal to the RPM input which then turns on a 12-volt, 20-AMP RPM output used for emergency pump control.

This feature is commonly used for the utility application to remotely elevate engine speed to a single preset and maintain the engine speed until the operator brings the engine back to idle through a second action. This feature also provides an emergency pump control output from the Remote Power Module (RPM) when the engine is not running. Engine preset 1 must be programmed in the Engine Control Module (ECM) parameters with the appropriate service tool. This feature also requires that feature 12VXU be ordered on the vehicle or in-cab stationary Preset throttle control be set up with the appropriate engine service tool if feature 60AJH is installed in the field.

System Block Diagram:

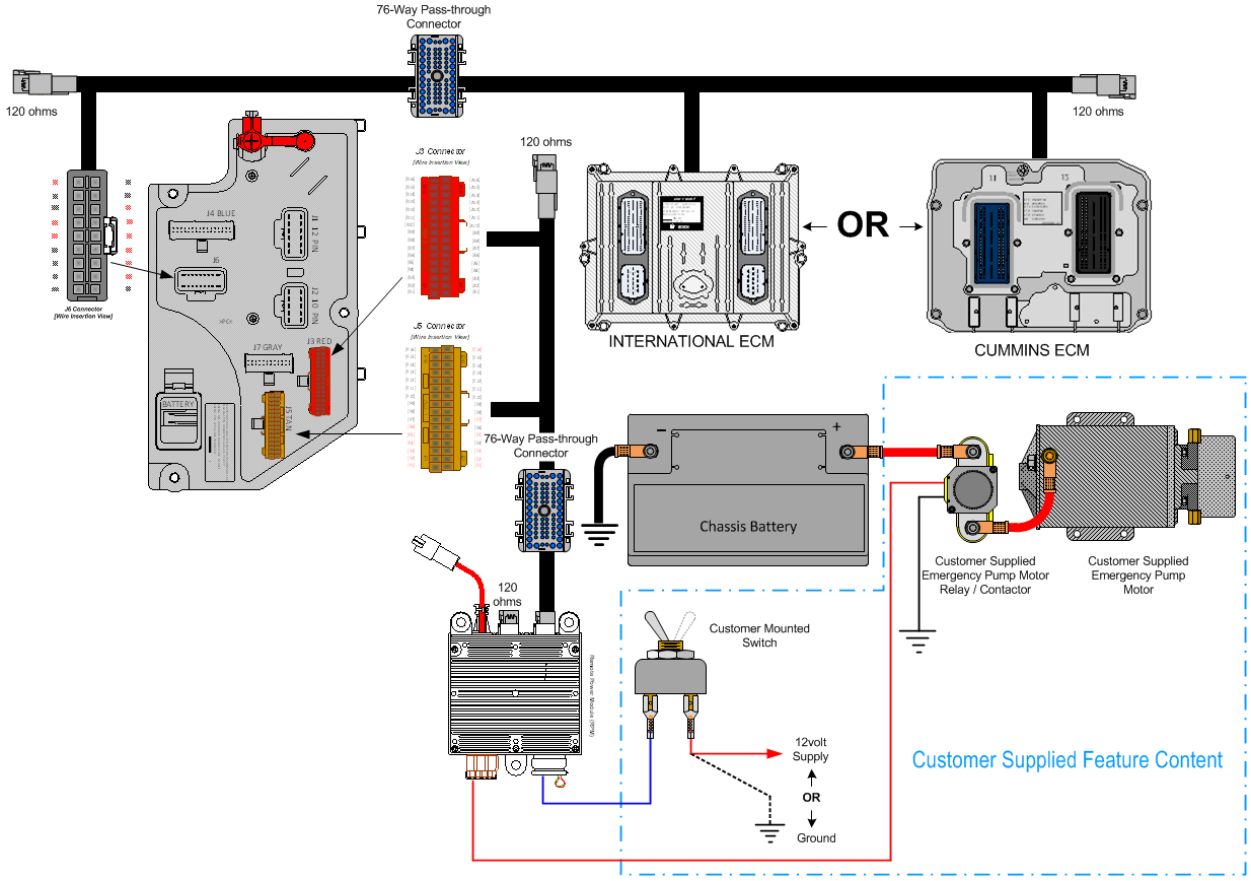

Body Controller Software Feature Codes:

- 597323 - BCM PROG, EXT ENGINE SPD CONT'L with Utility Application
- 597324 - BCM PROG, EXT ENGINE SPD CONT'L for Emergency Power Output and Utility Application, for use with External Engine Speed Control

Body Controller Software Feature Code Parameters:

Parameter	ID	Description	Default	Units	Min	Max	Step
TEM_Ext_Eng_Speed_Control_Mode	2035	This parameter sets the mode of operation for the TEM External Engine Speed Control feature	2	List	0	3	1
TEM_Ext_Eng_Spd_Ctrl_PTO_Ilock	2036	If this parameter is a one, external engine speed controls will be interlocked to PTO request.	0	On/off	0	1	1
TEM_Emergency_Pump_Fuse	2060	Fusing value for the output driving the emergency pump in the combination RESC emergency pump feature.	20	amp	0	20	0.1
TEM_Ext_Eng_Spd_Ctrl_Active_State	2158	This is the active state for the external engine speed control switch	1	List	0	1	3

Parameter Definitions:

- **TEM_Ext_Eng_Speed_Control_Mode** – This parameter sets the mode of operation for the TEM External Engine Speed Control feature.
  0 – Remote engine speed control does not function
  1 – 12 Volts on the engine speed control input causes engine to ramp; ground causes engine to return to idle.
  2 – Pulling the engine speed control input momentarily (pulled and released) to its active state causes the engine to ramp; Another momentary active state transition causes engine to return to idle
  3 – Engine will ramp for only as long as the engine speed control input is held in its active state.
- **TEM_Ext_Eng_Spd_Ctrl_PTO_Ilock** – This parameter sets the optional PTO interlock mode ON or OFF. If set ON, the Remote engine speed control preset-1 will be interlocked to all International® pre-engineered PTO features that use a center panel switch. This means that the remote engine speed control will only be allowed to operate if the PTO is being requested to engage. If this parameter is not set, the engine speed control will operate regardless of the PTO request.
- **TEM_Emergency_Pump_Fuse** – This fusing value for the output driving the emergency pump in the combination remote engine speed control emergency pump feature.
- **TEM_Ext_Eng_Spd_Ctrl_Active_State** – This is the active state for the external engine speed control switch:
  0 – RPM input floating (not grounded or at 12 Volts
  1 – RPM input grounded.
  2 – NOT USED
  3 - RPM input 12 Volts

Note/s About Possible Software Feature Conflicts:
597265, 597321 or 597322 will conflict with 597323

Parts Associated with This Feature:

PART NUMBER	DESCRIPTION
RPM OUTPUT TERMINAL KITS	
2585651C91	RPM TERMINAL KIT 12-GAUGE
2585423C91	RPM TERMINAL KIT 14-GAUGE
RPM BROWN 8–WAY CONNECTOR	
3548934C1	8–WAY CONNECTOR BODY
3534163C1	12-GAUGE TERMINAL
3535931C1	14-GAUGE TERMINAL
3535930C1	16 & 18-GAUGE TERMINAL
3548945C1	12 & 14-GAUGE CABLE SEAL
3535937C1	16 & 18-GAUGE CABLE SEAL

3548943C1	CONNECTOR LOCK
3573833C1	CAP LOCK
3535938C1	CAVITY PLUG
RPM 23-WAY CONNECTOR	
3677559C1	23-WAY CONNECTOR
1698937C1	16, 18, 20-GAUGE TERMINAL
1688285C1	CAVITY PLUG

How to Test This Feature:
1. Verify the RPM input labeled Remote_Engine_Speed_Sw_Input (pin position specified Diamond Logic® software) is receiving GND as long as the switch is closed.
2. Verify that the engine ramps to the first preset speed.
3. If engine does not ramp to the first preset speed, check engine programming to verify that the correct engine speed control parameters are set using (NED) or (INSITE) software.
4. Deactivate the remote engine speed control switch (release GND).
5. Verify the RPM input labeled Remote_Engine_Speed_Sw_Input (pin position specified Diamond Logic® Builder software) is an open circuit when switch is in the down or open position.
6. Verify that the engine returns to idle.
7. Verify 12 volts 20 amps on RPM output connector labeled Utility_Emergency_Pump_Output.

Note: This feature uses body controller-based software controls which can be diagnosed with The International® Diamond Logic® Builder software (see local dealer if not owned).

References:
Refer to the applicable International® Circuit Diagrams and Service Manuals.

18.18. 60AJJ: BDY INTG, THROTTLE CONTROL Accommodation for Single Customer-Mounted Momentary Switch, for Refuse Applications, Programmable Mode Various Switch Actions, Useable Only While Vehicle is Stopped, and the Park Brake is Applied (requires one RPM input).

Feature Applicability to Vehicle Platforms:

- Heavy Vocational (HV)
- Medium Vocational (MV)
- Heavy Extreme (HX) 2021 and Newer

Extended Description: A Truck Equipment Manufacturer or customer-mounted single momentary switch is used to control engine speed from a remote location. When the operator moves the switch to the up position or the switch closes, the switch supplies 12-volts to the RPM input which activates Engine Speed Preset 1, the engine will stay at Engine Speed Preset 1 as long as the switch continues to supply 12-volts to the RPM input. When the operator moves the switch to the down position or the switch opens, 12-volts is removed from the RPM input to deactivate remote engine speed control preset 1 returning the engine to idle.

This feature is commonly used for the refuse application to remotely elevate engine speed to a single preset and maintain the engine speed until the remote input is deactivated. Engine preset 1 must be programmed in the Engine Control Module (ECM) parameters with the appropriate service tool. This feature also requires that feature 12VXU be ordered on the vehicle or in-cab stationary Preset throttle control be set up with the appropriate engine service tool if feature 60AJJ is installed in the field.

System Block Diagram:

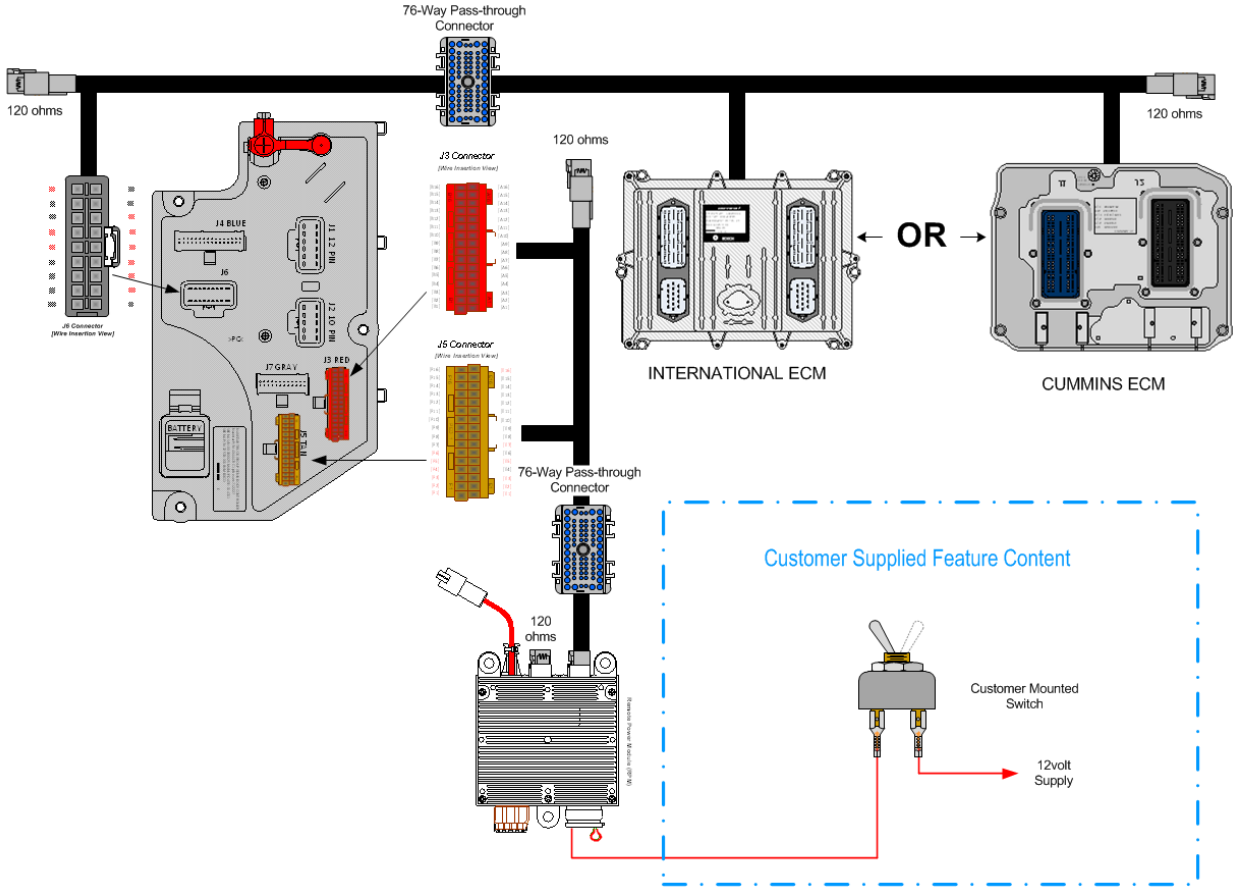

Body Controller Software Feature Codes:

- 597265 - BCM PROG, EXT ENGINE SPD CONT'L on Demand Engine Speed for Refuse

Body Controller Software Feature Code Parameters:

Parameter	ID	Description	Default	Units	Min	Max	Step
TEM_Ext_Eng_Speed_Control_Mode	2035	This parameter sets the mode of operation for the TEM External Engine Speed Control feature	3	List	0	3	1
TEM_Ext_Eng_Spd_Ctrl_PTO_Ilock	2036	If this parameter is a one, external engine speed controls will be interlocked to PTO request.	0	On/off	0	1	1
TEM_Ext_Eng_Spd_Ctrl_Active_State	2158	This is the active state for the external engine speed control switch	3	List	0	1	3

Parameter Definitions:

- **TEM_Ext_Eng_Speed_Control_Mode** – This parameter sets the mode of operation for the TEM External Engine Speed Control feature.
  0 – Remote engine speed control does not function
  1 – 12 Volts on the engine speed control input causes engine to ramp; ground causes engine to return to idle.
  2 – Pulling the engine speed control input momentarily (pulled and released) to its active state causes the engine to ramp; Another momentary active state transition causes engine to return to idle
  3 – Engine will ramp for only as long as the engine speed control input is held in its active state.
- **TEM_Ext_Eng_Spd_Ctrl_PTO_Ilock** – This parameter sets the optional PTO interlock mode ON or OFF. If set ON, the Remote engine speed control preset-1 will be interlocked to all International® pre-engineered PTO features that use a center panel switch. This means that the remote engine speed control will only be allowed to operate if the PTO is being requested to engage. If this parameter is not set, the engine speed control will operate regardless of the PTO request.
- **TEM_Ext_Eng_Spd_Ctrl_Active_State** – This is the active state for the external engine speed control switch:
  0 – RPM input floating (not grounded or at 12 Volts
  1 – RPM input grounded.
  2 – NOT USED
  3 - RPM input 12 Volts

Note/s About Possible Software Feature Conflicts:
597321,597322 or 597323 will conflict with 597265.
597324 may require 597265

Parts Associated with This Feature:

PART NUMBER	DESCRIPTION
RPM 23-WAY CONNECTOR	
3677559C1	23-WAY CONNECTOR
1698937C1	16, 18, 20-GAUGE TERMINAL
1688285C1	CAVITY PLUG

REMOTE POWER MODULE 23-WAY CONNECTOR

How to Test This Feature:
1. Stationary Remote engine speed control preset-1 Activation; Start engine, set park brake, transmission in neutral or park, vehicle speed is less than one MPH, and take the switch to the closed position, or supply 12-volts on the input pin labeled Remote_Engine_Speed_Sw_Input, or use Diamond Logic® Builder to Force the RPM input pin to the 12-volt.
2. Verify the RPM input labeled Remote_Engine_Speed_Sw_Input (pin position specified Diamond Logic® Builder software) is receiving 12-volts as long as the switch is closed.
3. Verify that the engine ramps to the first preset speed.
4. If engine does not ramp to the first preset speed, check the engine programming to verify that the correct engine speed control parameters are set using (NED) or (INSITE) software.
5. Deactivate the remote engine speed control switch (release 12-volts).
6. Verify the RPM input labeled Remote_Engine_Speed_Sw_Input (pin position specified Diamond Logic® Builder software) is an open circuit when switch is in the down or open position.
7. Verify that the engine returns to idle.

Note: This feature uses body controller-based software controls which can be diagnosed with The International® Diamond Logic® Builder software (see local dealer if not owned).

References:
Refer to the applicable International® Circuit Diagrams and Service Manuals.

18.19. Engine Speed Control Over Datalink: J1939 Datalink Engine Speed Control for International A26 and S13 Engines.

Feature Applicability to Vehicle Platforms:

- Heavy Vocational (HV)
- Line Haul Transport (LT)
- Regional Haul (RH)

Extended Description: This function provides an engine control module interface with a customer provided engine speed control module using the Body Control Module as a pass-through device. The customer mounted engine speed control module shall communicate with the Body Control Module over the private, body builder J1939, 250K baud rate datalink. Please reference circuit diagrams and additional service documentation regarding the overall architectural topology of the private J1939, 250K baud rate datalink as it may vary based on truck model.

Instructions: The implementation of the datalink control function for remote engine speed control requires following instructions:

- Customer mounted remote engine speed control module needs to be part of the Body Builder J1939, 250K bus physical layer. Other significant connections within this datalink architecture are the Body Control Module connector J5 (1602) pins F5 (CAN-) and F6 (CAN+). As well as the 76-way bulkhead connector pins 52 (CAN+), and 53 (CAN-), where the Body Builder datalink both enters and leaves the vehicle cab (See the system block diagram [below]).
- If a data link is not currently wired to F5 and F6, a backbone with terminating resistors will need to be added with the BCM pins and device pins circuits stubbed to the new backbone. Any vehicle that has the International OTA device will already have the data link installed.
- Body Control Module software feature 597424 needs to be enabled using International's Diamond Logic® Builder software.
- Engine Control Module programmable parameters (PPID) must be appropriately set in accordance with the customer's requirements using International's SDS software tool. See "Engine Control Module PPID table" for applicable settings.
- To control engine speed between min and max PTO engine speed boundaries, the customer remote engine speed control module needs to provide the following messages from source address 0x07. (See table containing SAE J1939-71 Power Takeoff Information.)

System Block Diagram:

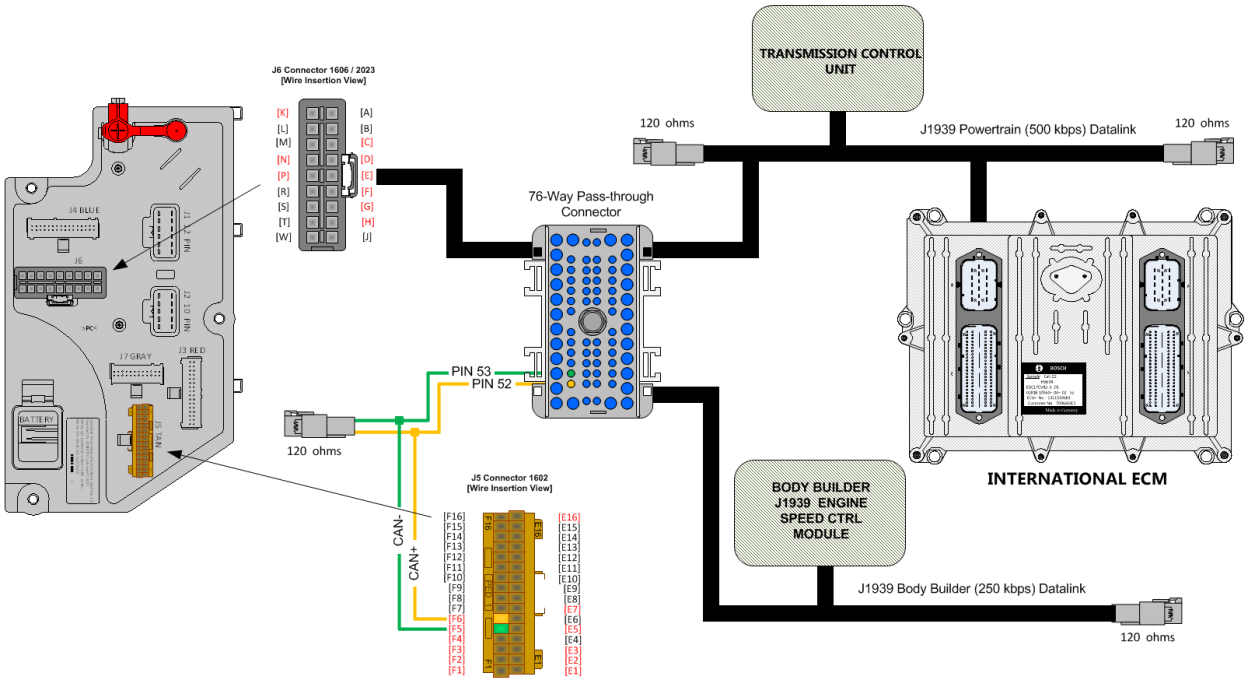

BCM Software Feature Code (Remote Variable):

- 597424 - BCM PROG, **ENGINE PTO FOR BODY BUILDDER J1939, Uses SA 0X07 from Body Builder & send them as SA 0X21 to ECM on the Powertrain Bus.**

Note: When Using TSC messages for controlling engine speed, ensure that the **External Body Builder PTO Configuration (TSC1) parameter is enabled in the engine using SDS.**

18.19.1. Preset Speed Ramping

Extended Description: This function provides a preset engine speed control interface with a customer added remote engine speed control module using the Body Control Module as a pass-through device. The customer mounted remote engine speed control module shall communicate with the Body Control Module over the private, body builder J1939, 250K baud rate datalink. Please reference circuit diagrams and additional service documentation regarding the overall architectural topology of the private J1939, 250K baud rate datalink as it may vary based on truck model.

- **Engine Ramp Procedure:**

    - Engine Remote PTO Governor Preset Speed Control Switch (SPN 979) needs to be turned on continuously.
        - SPN 979 = 1 continuously
    - Engine PTO Governor Resume Switch (SPN 982) or Engine PTO Governor Set Switch (SPN 984) needs to be turned on for less than 500 ms and greater than 100ms. This signal needs to be at least 100 ms after SPN 978 is turned on; otherwise, engine will respond in a different way.
    - SPN 978 = 1 (continuously).
        - 100 ms later, SPN 982 or SPN 984 = 1 for less than 500 ms and greater than 100ms.
        - This pulse signal is required to activate Engine Controller PTO feature.

            To Vary Engine Speed Between Programmed Preset Speeds:

            - To step up engine speed, SPN 982 = 1 for less than 500 ms and greater than 100ms
            - To step down engine speed, SPN 984 = 1 for less than 500 ms and greater than 100ms

Note: *Sending SPN 982 =1 and 984 = 1 together is not acceptable.*

The system will define 'Engine Remote PTO Governor Preprogrammed Speed Control Switch' as PGN 65264 SPN 979.
The system will define 'BBCM Engine PTO Preprogrammed Switch' Inactive as Engine Remote PTO Governor Preprogrammed Speed Control Switch data = 00b.
The system will define 'BBCM Engine PTO Preprogrammed Switch' Active as Engine Remote PTO Governor Preprogrammed Speed Control Switch data = 01b.
The system will define 'BBCM Engine PTO Preprogrammed Switch' Error as Engine Remote PTO Governor Preprogrammed Speed Control Switch data = 10b.
The system will define 'BBCM Engine PTO Preprogrammed Switch' Not Available as Engine Remote PTO Governor Preprogrammed Speed Control Switch data = 11b.

This feature enables BCM communication of the following CAN messages:

- *Send PTO_Trans_Output_Engmt_Status – PGN 64932 SPN 3462*
- *Send PTO_Xfer_Case_Engmt_Status – PGN 64932 SPN 3463*
- *Send Remote_PTO_Preset_Enable – PGN 65264 SPN 979*

ECM Remote Preset Software Programmable Parameter Identification:

Description	Recommended Value
External Body Builder PTO Configuration (TSC1)	Enable

AESC Remote Preset On/Off Switch Operation Enable	Disable (0)
AESC Remote Preset Standby Speed for On/Off Switch Operation	0 rpm
Auxiliary Engine Speed Control - Mode	Remote and In-cab operation (3)
Auxiliary Engine Speed Control - Maximum Vehicle Speed	5 mph
Auxiliary Engine Speed Control - Preset Engine Speed 1 (Set)	800 rpm
Auxiliary Engine Speed Control - Preset Engine Speed 2 (Resume)	900 rpm
Auxiliary Engine Speed Control - Ramp Rate	100 rpm/s
Auxiliary Engine Speed Control - Maximum Engine Speed	1800 rpm
Auxiliary Engine Speed Control - Disable with Clutch	Clutch Does Not Change AESC (0)
Auxiliary Engine Speed Control - Disable with Brake	Brake Does Not Change AESC (0)
Auxiliary Engine Speed Control - Disable with APS	APS is ignored (2)
Auxiliary Engine Speed Control - Preset Engine Speed 3	1000 rpm
Auxiliary Engine Speed Control - Preset Engine Speed 4	1100 rpm
Auxiliary Engine Speed Control - Preset Engine Speed 5	1200 rpm
Auxiliary Engine Speed Control - Preset Engine Speed 6	1300 rpm
Auxiliary Engine Speed Control - Engine Speed Limit with VSS Fault	1800 rpm
Auxiliary Engine Speed Control - Maximum Engine Load	100%
AESC - APS Maximum Engine Speed Override	1800 rpm
Auxiliary Engine Speed Control - Minimum Engine Speed	600 rpm

Auxiliary Engine Speed Control - Engine Speed Throttle Down Ramp Rate	100 rpm/s
Auxiliary Engine Speed Control - Bump Up/Down Step	100 rpm
Auxiliary Engine Speed Control - Maximum Engine Load Time	10 seconds
Remote Auxiliary Engine Speed Control - Preset Engine Speed Select	Preset Speed 1 (1)
Auxiliary Engine Speed Control - Speed Controlled to Engine Load	Off (0)
Interrupt DPF Regeneration When PTO Activated	Active PTO does not inhibit Regen (0)
AESC Disable with Parking Brake	Parking Brake Does not Change AESC (0)
Disable CAP when AESC is enabled	CAP is disabled when AESC is in standby (1)
Cruise Control/AESC On/Off Switch Input Selection	CAN (1)
Cruise Control Set/Coast Switch Input Selection	BOTH (2)
Cruise Control Resume/Accelerate Switch Input Selection	BOTH (2)
Master Switch for Setting Source	CAN (1)

Engine Control Module PPID Table

Note: *The other ECM programmable parameters for PTO, which are listed in AESC parameters tab in SDS, need to be set as per customer choice in particularly the interlock conditions to disable PTO such as brake pedal, parking brake, accelerator pedal.*

Vehicle Application Layer (SAE J1939-71):

PGN 65264 (0XFEF0) Power Takeoff Information		
Transmission Repetition Rate	100 ms	
Data Length	8	
Extended Data Page	0	
Data Page	0	
PDU Format	254	
PDU Specific	240	
Default Priority	6	

Parameter Group Number	65264 (0XFEF0)		
Start Position	**Length**	**Parameter Name**	**SPN**
6.5	2 bits	Engine Remote PTO Preset Ctrl Switch	979
7.5	2 bits	Engine Remote PTO Governor Resume Switch	982
7.1	2 bits	Engine Remote PTO Governor Set Switch	984
Additional SPN (982) Data			
SPN 982	Engine PTO Governor Resume Switch		
Switch signal of the PTO control activator which indicates that the activator is in the position to “resume” a previously established PTO governor set speed.			
00 – Off			
01 – On			
10 – Error			
11 – Not available			
Data Length	2 bits		
Resolution	4 states/2 bit, 0 offset		
Data Range	0 to 3	Operational Range: same as data range	
Type	Measured		
Supporting Information			
PGN reference	65264		
Additional SPN (984) Data			
SPN 984	Engine PTO Governor Set Switch		
Switch signal of the PTO control activator which indicates that the activator is in the position to “set” the engine PTO governor set peed.			
00 – Off			
01 – On			
10 – Error			
11 – Not available			
Data Length	2 bits		
Resolution	4 states/2 bit, 0 offset		
Data Range	0 to 3	Operational Range: same as data range	
Type	Measured		
Supporting Information			
PGN reference	65264		

PGN 65264 (0XFEF0) Data

18.19.2. Variable Ramping

Extended Description: This function provides a variable engine speed control interface with a customer added remote engine speed control module using the Body Control Module as a pass-through device. The customer mounted remote engine speed control module shall communicate with the Body Control Module over the private, body builder J1939, 250K baud rate datalink. Please reference circuit diagrams and additional service documentation regarding the overall architectural topology of the private J1939, 250K baud rate datalink as it may vary based on truck model.

- **Engine Ramp Procedure:**
  - Engine Remote PTO Governor Variable Speed Control Switch (SPN 978) needs to be turned on continuously.
    - SPN 978 = 1 continuously

- Engine PTO Governor Resume Switch (SPN 982) or Engine PTO Governor Set Switch (SPN 984) needs to be turned on for less than 500 ms and greater than 100ms. This signal needs to be at least 100 ms after SPN 978 is turned on; otherwise, engine will respond in a different way.
- SPN 978 = 1 (continuously).
  - 100 ms later, SPN 982 or SPN 984 = 1 for less than 500 ms and greater than 100ms.

  - This pulsed signal is required to activate the Engine Controller PTO feature.

    To Vary Engine Speed in Discrete Steps:
    - To step up engine speed, SPN 982 = 1 for less than 500 ms and greater than 100ms
    - To step down engine speed, SPN 984 = 1 for less than 500 ms and greater than 100ms

    To Vary Engine Speed in a Progressive Ramp:
    - To ramp up engine speed, SPN 982 = 1 continuously
    - To ramp down engine speed, SPN 984 = 1 continuously

Note: *Sending SPN 982 =1 and 984 = 1 together is not acceptable.*

This feature code enables BCM communication of the following CAN messages:

- *Send PTO_Trans_Output_Engmt_Status – PGN 64932 SPN 3462*
- *Send PTO_Xfer_Case_Engmt_Status – PGN 64932 SPN 3463*
- *Send Remote_PTO_Variable_Enable – PGN 65264 SPN 978*

ECM Remote Variable Software Programmable Parameter Identification:

Description	Recommended Value
External Body Builder PTO Configuration (TSC1)	Enable
AESC State to Inhibit HC DeSorb	Inhibit Desorb when AESC is in standby or controlling engine speed (1)
AESC Remote Preset On/Off Switch Operation Enable	Disable (0)
AESC Remote Preset Standby Speed for On/Off Switch Operation	0 rpm
Auxiliary Engine Speed Control - Mode	Remote and In-cab operation (3)

Auxiliary Engine Speed Control - Maximum Vehicle Speed	5 mph
Auxiliary Engine Speed Control - In Cab Mode	Stationary Variable (2)
Auxiliary Engine Speed Control - In Cab Operator Interface	Disable (1)
Auxiliary Engine Speed Control - Disable with Clutch	Clutch Does Not Change AESC (0)
Auxiliary Engine Speed Control - Disable with Brake	Brake Does Not Change AESC (0)
Auxiliary Engine Speed Control - Disable with APS	APS is ignored (2)
Auxiliary Engine Speed Control - Maximum Engine Load	100%
AESC - APS Maximum Engine Speed Override	1800 rpm
Auxiliary Engine Speed Control - Minimum Engine Speed	600 rpm
Auxiliary Engine Speed Control - Engine Speed Throttle Down Ramp Rate	100 rpm/s
Auxiliary Engine Speed Control - Bump Up/Down Step	100 rpm
Auxiliary Engine Speed Control - Maximum Engine Load Time	10 seconds
Auxiliary Engine Speed Control - Speed Controlled to Engine Load	Off (0)
Interrupt DPF Regeneration When PTO Activated	Active PTO does not inhibit Regen (0)
AESC Disable with Parking Brake	Parking Brake Does not Change AESC (0)
Hardwired Cruise Control Switches Diagnostic Enable	Enable (1)
Disable CAP when AESC is enabled	CAP is disabled when AESC is in standby (1)
Cruise Control/AESC On/Off Switch Input Selection	CAN (1)
Cruise Control Set/Coast Switch Input Selection	BOTH (2)
Cruise Control Resume/Accelerate Switch Input Selection	BOTH (2)

Remote AESC Variable Speed Switch Input Selection	CAN (1)
Remote Accelerator Pedal Input Selection	CAN (1)
Master Switch for Setting Source	CAN (1)

Engine Control Module PPID Table

Note: *The other ECM programmable parameters for PTO, which are listed in AESC parameters tab in SDS, need to be set as per customer choice in particularly the interlock conditions to disable PTO such as brake pedal, parking brake, accelerator pedal.*

Vehicle Application Layer (SAE J1939-71):

PGN 65264 (0XFEF0) Power Takeoff Information			
Transmission Repetition Rate	100 ms		
Data Length	8		
Extended Data Page	0		
Data Page	0		
PDU Format	254		
PDU Specific	240		
Default Priority	6		
Parameter Group Number	65264 (0XFEF0)		
Start Position	**Length**	**Parameter Name**	**SPN**
6.5	2 bits	Engine Remote PTO Governor Variable Speed Ctrl Switch	978
7.5	2 bits	Engine Remote PTO Governor Resume Switch	982
7.1	2 bits	Engine Remote PTO Governor Set Switch	984

Additional SPN (982) Data		
SPN 982	Engine PTO Governor Resume Switch	
Switch signal of the PTO control activator which indicates that the activator is in the position to “resume” a previously established PTO governor set speed.		
00 – Off		
01 – On		
10 – Error		
11 – Not available		
Data Length	2 bits	
Resolution	4 states/2 bit, 0 offset	
Data Range	0 to 3	Operational Range: same as data range
Type	Measured	
Supporting Information		
PGN reference	65264	

Additional SPN (984) Data	
SPN 984	Engine PTO Governor Set Switch
Switch signal of the PTO control activator which indicates that the activator is in the position to “set” the engine PTO governor set peed.	
00 – Off	
01 – On	
10 – Error	
11 – Not available	
Data Length	2 bits

Resolution	4 states/2 bit, 0 offset	
Data Range	0 to 3	Operational Range: same as data range
Type	Measured	
Supporting Information		
PGN reference	65264	

PGN 65264 (0XFEF0) Data

The system will define ‘Engine Remote PTO Governor Variable Speed Control Switch’ as PGN 65264 SPN 978.
The system will define ‘Engine Remote PTO Switch’ Inactive as Engine Remote PTO Governor Variable Speed Control Switch data = 00b.
The system will define ‘Engine Remote PTO Switch’ Active as Engine Remote PTO Governor Variable Speed Control Switch data = 01b.
The system will define ‘Engine Remote PTO Switch’ Error as Engine Remote PTO Governor Variable Speed Control Switch data = 10b.
The system will define ‘Engine Remote PTO Switch’ Not Available as Engine Remote PTO Governor Variable Speed Control Switch data = 11b.
The system will define ‘vehicle communications’ as SAE J1939 defined Engine PTO Governor Resume Switch from the BBCM to the BCM.

18.19.3. Remote Pedal Enable Switch

Extended Description: This function provides a remote pedal enable switch interface with a customer added remote engine speed control module using the Body Control Module as a pass-through device. The customer mounted remote engine speed control module shall communicate with the Body Control Module over the private, body builder J1939, 250K baud rate datalink. Please reference circuit diagrams and additional service documentation regarding the overall architectural topology of the private J1939, 250K baud rate datalink as it may vary based on truck model.
When enabled, the remote pedal enable switch is used as an additional requirement that must be satisfied to allow the remote pedal input to control the engine speed. When this function is disabled simply sending the preset or variable engine speed control message will allow the engine to respond to the remote pedal input.

- **Remote Pedal Enable Switch Function:**
  - Engine Remote PTO Governor Variable Speed Control Switch (SPN 978) or Remote PTO Governor Preset Speed Control Switch (SPN 979) needs to be turned on continuously.
    - (SPN 978) or (SPN 979) = 1 continuously
  - Engine Remote PTO Accelerator Enable Switch (SPN 969) also needs to be turned on continuously.
    - (SPN 969) = 1 continuously

This feature code enables BCM communication of the following CAN messages:

- *Send PTO_Trans_Output_Engmt_Status – PGN 64932 SPN 3462*
- *Send PTO_Xfer_Case_Engmt_Status – PGN 64932 SPN 3463*
- *Send Remote_PTO_Variable_Enable – PGN 65264 SPN 978*

ECM Remote Variable Software Programmable Parameter Identification:

Description	Recommended Value
AESC Disable with Parking Brake	Parking Brake Does not Change AESC (0)
Hardwired Cruise Control Switches Diagnostic Enable	Enable (1)
Auxiliary Engine Speed Control - Mode	Remote and In-cab operation (3)
Transfer Case Switch Signal Source	CAN (1)
Remote Accelerator Enable Switch	Enable (1)
Disable CAP when AESC is enabled	CAP is disabled when AESC is in standby (1)
Cruise Control/AESC On/Off Switch Input Selection	CAN (1)
Cruise Control Set/Coast Switch Input Selection	BOTH (2)
Cruise Control Resume/Accelerate Switch Input Selection	BOTH (2)
Remote Accelerator Switch Input Selection	CAN (1)
Remote Accelerator Pedal Input Selection	CAN (1)
Master Switch for Setting Source	CAN (1)

Engine Control Module PPID Table

Note: *The other ECM programmable parameters for PTO, which are listed in AESC parameters tab in SDS, need to be set as per customer choice in particularly the interlock conditions to disable PTO such as brake pedal, parking brake, accelerator pedal.*

Vehicle Application Layer (SAE J1939-71):

PGN 65264 (0XFEF0) Power Takeoff Information		
Transmission Repetition Rate	100 ms	
Data Length	8	
Extended Data Page	0	

Data Page	0	
PDU Format	254	
PDU Specific	240	
Default Priority	6	
Parameter Group Number	65264 (0XFEF0)	

Start Position	Length	Parameter Name	SPN
6.5	2 bits	Engine Remote PTO Governor Variable Speed Ctrl Switch	978
7.5	2 bits	Engine Remote PTO Governor Resume Switch	982
7.1	2 bits	Engine Remote PTO Governor Set Switch	984

Additional SPN (982) Data		
SPN 982	Engine PTO Governor Resume Switch	
Switch signal of the PTO control activator which indicates that the activator is in the position to “resume” a previously established PTO governor set speed.		
00 – Off		
01 – On		
10 – Error		
11 – Not available		
Data Length	2 bits	
Resolution	4 states/2 bit, 0 offset	
Data Range	0 to 3	Operational Range: same as data range
Type	Measured	
Supporting Information		
PGN reference	65264	

Additional SPN (984) Data		
SPN 984	Engine PTO Governor Set Switch	
Switch signal of the PTO control activator which indicates that the activator is in the position to “set” the engine PTO governor set peed.		
00 – Off		
01 – On		
10 – Error		
11 – Not available		
Data Length	2 bits	
Resolution	4 states/2 bit, 0 offset	
Data Range	0 to 3	Operational Range: same as data range
Type	Measured	
Supporting Information		
PGN reference	65264	

PGN 65264 (0XFEF0) Data

The system will define ‘vehicle communications’ as SAE J1939 defined Remote Accelerator Enable Switch from the BBCM to the BCM.
The system will define ‘Remote Accelerator Enable Switch’ as PGN 61441 SPN 969.
The system will define ‘BBCM Remote Accel Enable Switch’ Inactive as Remote Accelerator Enable Switch data = 00b.
The system will define ‘BBCM Remote Accel Enable Switch’ Active as Remote Accelerator Enable Switch data = 01b.
The system will define ‘BBCM Remote Accel Enable Switch’ Error as Remote Accelerator Enable Switch data = 10b.
The system will define ‘BBCM Remote Accel Enable Switch’ Not Available as Remote Accelerator Enable Switch data = 11b.

This feature code enables BCM communication of the following CAN messages:

- *Send PTO_Trans_Output_Engmt_Status – PGN 64932 SPN 3462*
- *Send PTO_Xfer_Case_Engmt_Status – PGN 64932 SPN 3463*
- *Send Remote_PTO_Variable_Enable – PGN 65264 SPN 978*

Note: *The other ECM programmable parameters for PTO, which are listed in AESC parameters tab in SDS, need to be set as per customer choice in particularly the interlock conditions to disable PTO such as brake pedal, parking brake, accelerator pedal.*

Vehicle Application Layer (SAE J1939-71):

PGN 65264 (0XFEF0) Power Takeoff Information			
Transmission Repetition Rate	100 ms		
Data Length	8		
Extended Data Page	0		
Data Page	0		
PDU Format	254		
PDU Specific	240		
Default Priority	6		
Parameter Group Number	65264 (0XFEF0)		
Start Position	**Length**	**Parameter Name**	**SPN**
6.5	2 bits	Engine Remote PTO Governor Variable Speed Ctrl Switch	978
7.5	2 bits	Engine Remote PTO Governor Resume Switch	982
7.1	2 bits	Engine Remote PTO Governor Set Switch	984

Additional SPN (982) Data		
SPN 982	Engine PTO Governor Resume Switch	
Switch signal of the PTO control activator which indicates that the activator is in the position to “resume” a previously established PTO governor set speed.		
00 – Off		
01 – On		
10 – Error		
11 – Not available		
Data Length	2 bits	
Resolution	4 states/2 bit, 0 offset	
Data Range	0 to 3	Operational Range: same as data range
Type	Measured	
Supporting Information		
PGN reference	65264	

Additional SPN (984) Data	
SPN 984	Engine PTO Governor Set Switch
Switch signal of the PTO control activator which indicates that the activator is in the position to “set” the engine PTO governor set peed.	
00 – Off	
01 – On	
10 – Error	
11 – Not available	
Data Length	2 bits

Resolution	4 states/2 bit, 0 offset	
Data Range	0 to 3	Operational Range: same as data range
Type	Measured	
Supporting Information		
PGN reference	65264	

PGN 65264 (0XFEF0) Data

18.19.4. Remote Pedal Engine Ramping

Extended Description: This function provides a remote pedal engine speed control interface with a customer added remote engine speed control module using the Body Control Module as a pass-through device. The customer mounted remote engine speed control module shall communicate with the Body Control Module over the private, body builder J1939, 250K baud rate datalink. Please reference circuit diagrams and additional service documentation regarding the overall architectural topology of the private J1939, 250K baud rate datalink as it may vary based on truck model.
When enabled, the remote pedal enable switch must be satisfied to allow the remote pedal input to control the engine speed.
When the remote pedal enable switch is disabled, simply sending the preset or variable engine speed control message will allow the engine to respond to the remote pedal input.

- **Remote Pedal Enable Switch Function:**
  - Engine Remote PTO Governor Variable Speed Control Switch (SPN 978) or Remote PTO Governor Preset Speed Control Switch (SPN 979) needs to be turned on continuously.
    - (SPN 978) or (SPN 979) = 1 continuously
  - Engine Remote PTO Accelerator Enable Switch (SPN 969) also needs to be turned on continuously.
    - (SPN 969) = 1 continuously

This feature code enables BCM communication of the following CAN messages:

- *Send PTO_Trans_Output_Engmt_Status – PGN 64932 SPN 3462*
- *Send PTO_Xfer_Case_Engmt_Status – PGN 64932 SPN 3463*
- *Send Remote_PTO_Variable_Enable – PGN 65264 SPN 978*

ECM Remote Variable Software Programmable Parameter Identification:

Description	Recommended Value
Auxiliary Engine Speed Control - Mode	Remote and In-cab operation (3)
Auxiliary Engine Speed Control - Maximum Vehicle Speed	5 mph

Auxiliary Engine Speed Control - In Cab Mode	Stationary Variable (2)
Auxiliary Engine Speed Control - In Cab Operator Interface	Disable (1)
Auxiliary Engine Speed Control - Remote Pedal Enable	Disable (0)
Auxiliary Engine Speed Control - Preset Engine Speed 1 (Set)	800 rpm
Auxiliary Engine Speed Control - Preset Engine Speed 2 (Resume)	900 rpm
Auxiliary Engine Speed Control - Ramp Rate	100 rpm/s
Auxiliary Engine Speed Control - Maximum Engine Speed	1800 rpm
Auxiliary Engine Speed Control - Disable with Clutch	Clutch Does Not Change AESC (0)
Auxiliary Engine Speed Control - Disable with Brake	Brake Does Not Change AESC (0)
Auxiliary Engine Speed Control - Disable with APS	APS is ignored (2)
Auxiliary Engine Speed Control - Preset Engine Speed 3	1000 rpm
Auxiliary Engine Speed Control - Preset Engine Speed 4	1100 rpm
Auxiliary Engine Speed Control - Preset Engine Speed 5	1200 rpm
Auxiliary Engine Speed Control - Preset Engine Speed 6	1300 rpm
Auxiliary Engine Speed Control - Engine Speed Limit with VSS Fault	1800 rpm
Auxiliary Engine Speed Control - Maximum Engine Load	100%
AESC - APS Maximum Engine Speed Override	1800 rpm
Auxiliary Engine Speed Control - Minimum Engine Speed	600 rpm
Auxiliary Engine Speed Control - Engine Speed Throttle Down Ramp Rate	100 rpm/s
Auxiliary Engine Speed Control - Bump Up/Down Step	100 rpm

Auxiliary Engine Speed Control - Maximum Engine Load Time	10 seconds
Remote Auxiliary Engine Speed Control - Preset Engine Speed Select	Preset Speed 1 (1)
Auxiliary Engine Speed Control - Speed Controlled to Engine Load	Off (0)
Interrupt DPF Regeneration When PTO Activated	Active PTO does not inhibit Regen (0)
AESC Disable with Parking Brake	Parking Brake Does not Change AESC (0)
Hardwired Cruise Control Switches Diagnostic Enable	Enable (1)
Transfer Case Switch Signal Source	CAN (1)
Vehicle Speed Signal Mode	Public J1939/CAN OSS (3)
Transfer Case Input Mode Select	Driveline Engaged (0)
AESC Remote Pedal Enable	Remote Pedal Enabled with Automatic Jump to Previous
Disable CAP when AESC is enabled	CAP is disabled when AESC is in standby (1)
Cruise Control/AESC On/Off Switch Input Selection	CAN (1)
Cruise Control Set/Coast Switch Input Selection	BOTH (2)
Cruise Control Resume/Accelerate Switch Input Selection	BOTH (2)
Remote Accelerator Switch	DISABLED if pedal switch not desired. ENABLED if pedal switch desired.
Remote Accelerator Switch Input Selection	CAN (1)
Auxiliary Engine Shutdown Switch Input Selection	CAN (1)
Remote AESC Programmed Speed Switch Input Selection	CAN (1)
Remote AESC Variable Speed Switch Input Selection	CAN (1)
Remote Accelerator Pedal Position Input Selection	CAN (1)
Source of PGN 65264 Power Takeoff	BCM SA 0x21

Master Switch for Setting Source	CAN (1)

Engine Control Module PPID Table

Note: *The other ECM programmable parameters for PTO, which are listed in AESC parameters tab in SDS, need to be set as per customer choice in particularly the interlock conditions to disable PTO such as brake pedal, parking brake, accelerator pedal.*

Vehicle Application Layer (SAE J1939-71):

PGN 65264 (0XFEF0) Power Takeoff Information			
Transmission Repetition Rate	100 ms		
Data Length	8		
Extended Data Page	0		
Data Page	0		
PDU Format	254		
PDU Specific	240		
Default Priority	6		
Parameter Group Number	65264 (0XFEF0)		
Start Position	**Length**	**Parameter Name**	**SPN**
6.5	2 bits	Engine Remote PTO Governor Variable Speed Ctrl Switch	978
7.5	2 bits	Engine Remote PTO Governor Resume Switch	982
7.1	2 bits	Engine Remote PTO Governor Set Switch	984

Additional SPN (982) Data		
SPN 982	Engine PTO Governor Resume Switch	
Switch signal of the PTO control activator which indicates that the activator is in the position to “resume” a previously established PTO governor set speed.		
00 – Off		
01 – On		
10 – Error		
11 – Not available		
Data Length	2 bits	
Resolution	4 states/2 bit, 0 offset	
Data Range	0 to 3	Operational Range: same as data range
Type	Measured	
Supporting Information		
PGN reference	65264	

Additional SPN (984) Data		
SPN 984	Engine PTO Governor Set Switch	
Switch signal of the PTO control activator which indicates that the activator is in the position to “set” the engine PTO governor set peed.		
00 – Off		
01 – On		
10 – Error		
11 – Not available		
Data Length	2 bits	
Resolution	4 states/2 bit, 0 offset	
Data Range	0 to 3	Operational Range: same as data range
Type	Measured	

Supporting Information	
PGN reference	65264

PGN 65264 (0XFEF0) Data

The system will define ‘Remote Accelerator Enable Switch’ as PGN 61441 SPN 969.
The system will define ‘BBCM Remote Accel Enable Switch’ Inactive as Remote Accelerator Enable Switch data = 00b.
The system will define ‘BBCM Remote Accel Enable Switch’ Active as Remote Accelerator Enable Switch data = 01b.
The system will define ‘BBCM Remote Accel Enable Switch’ Error as Remote Accelerator Enable Switch data = 10b.
The system will define ‘BBCM Remote Accel Enable Switch’ Not Available as Remote Accelerator Enable Switch data = 11b.

18.19.5. Engine Speed Control with TSC1 Messaging (Not available on A26)

Extended Description: This function provides TSC1 Message control, using a customer-provided remote engine speed control module, using the Body Control Module as a pass-through device. The customer mounted remote engine speed control module shall communicate with the Body Control Module over the private, body builder J1939, 250K baud rate datalink. Please reference circuit diagrams and additional service documentation regarding the overall architectural topology of the private J1939, 250K baud rate datalink as it may vary based on truck model.

- **Engine Ramp Procedure:**

PGN 0 SPN 695 – Engine Override Control Mode – Send this as 01 Speed Control (00 Override disabled when elevated engine speed isn’t needed)
PGN 0 SPN 3349 – TSC1 Transmission Rate – We set this to send every 10ms
PGN 0 SPN 898 – Engine Requested Speed Limit – This value should be configured to the desired engine speed for the application
PGN 0 SPN 4206 – Message Counter – We had to set this to 15 (F, not available) for the request to work.
PGN 0 SPN 4207 – Message Checksum – We had to set this to 15 (F, not available) for the request to work.

PIM TSC1 Software Programmable Parameter Identification:

Description	Recommended Value
External Body Builder PTO Configuration (TSC1)	Enable

AESC State to Inhibit HC DeSorb	Inhibit Desorb when AESC is in standby or controlling engine speed (1)
AESC Remote Preset On/Off Switch Operation Enable	Disable (0)
AESC Remote Preset Standby Speed for On/Off Switch Operation	0 rpm
Auxiliary Engine Speed Control - Mode	Remote and In-cab operation (3)
Auxiliary Engine Speed Control - Maximum Vehicle Speed	5 mph
Auxiliary Engine Speed Control - In Cab Mode	Stationary Variable (2)
Auxiliary Engine Speed Control - In Cab Operator Interface	Disable (1)
Auxiliary Engine Speed Control - Disable with Clutch	Clutch Does Not Change AESC (0)
Auxiliary Engine Speed Control - Disable with Brake	Brake Does Not Change AESC (0)
Auxiliary Engine Speed Control - Disable with APS	APS is ignored (2)
Auxiliary Engine Speed Control - Maximum Engine Load	100%
AESC - APS Maximum Engine Speed Override	1800 rpm
Auxiliary Engine Speed Control - Minimum Engine Speed	600 rpm
Auxiliary Engine Speed Control - Engine Speed Throttle Down Ramp Rate	100 rpm/s
Auxiliary Engine Speed Control - Bump Up/Down Step	100 rpm
Auxiliary Engine Speed Control - Maximum Engine Load Time	10 seconds
Auxiliary Engine Speed Control - Speed Controlled to Engine Load	Off (0)
Interrupt DPF Regeneration When PTO Activated	Active PTO does not inhibit Regen (0)
AESC Disable with Parking Brake	Parking Brake Does not Change AESC (0)

Hardwired Cruise Control Switches Diagnostic Enable	Enable (1)
Disable CAP when AESC is enabled	CAP is disabled when AESC is in standby (1)
Cruise Control/AESC On/Off Switch Input Selection	CAN (1)
Cruise Control Set/Coast Switch Input Selection	BOTH (2)
Cruise Control Resume/Accelerate Switch Input Selection	BOTH (2)
Remote AESC Variable Speed Switch Input Selection	CAN (1)
Remote Accelerator Pedal Input Selection	CAN (1)
Master Switch for Setting Source	CAN (1)

PIM PPID Table

Note: *The other ECM programmable parameters for PTO, which are listed in AESC parameters tab in SDS, need to be set as per customer choice in particular the interlock conditions to disable PTO such as brake pedal, parking brake, accelerator pedal.*

18.20. Datalink Control for Split Shaft Operation: J1939 DATALINK ENGINE CONTROL for International A26 and S13 Engines.

Extended Description:
This function provides an interface with a customer added remote engine speed control module using the Body Control Module as a pass-through device. The customer mounted remote engine speed control module shall communicate with the Body Control Module over the private, body builder J1939, 250K baud rate datalink. Please reference circuit diagrams and additional service documentation regarding the overall architectural topology of the private J1939, 250K baud rate datalink as it may vary based on truck model.
When enabled, this function sends TSC1 engine control messages to the ECM.

System Block Diagram:

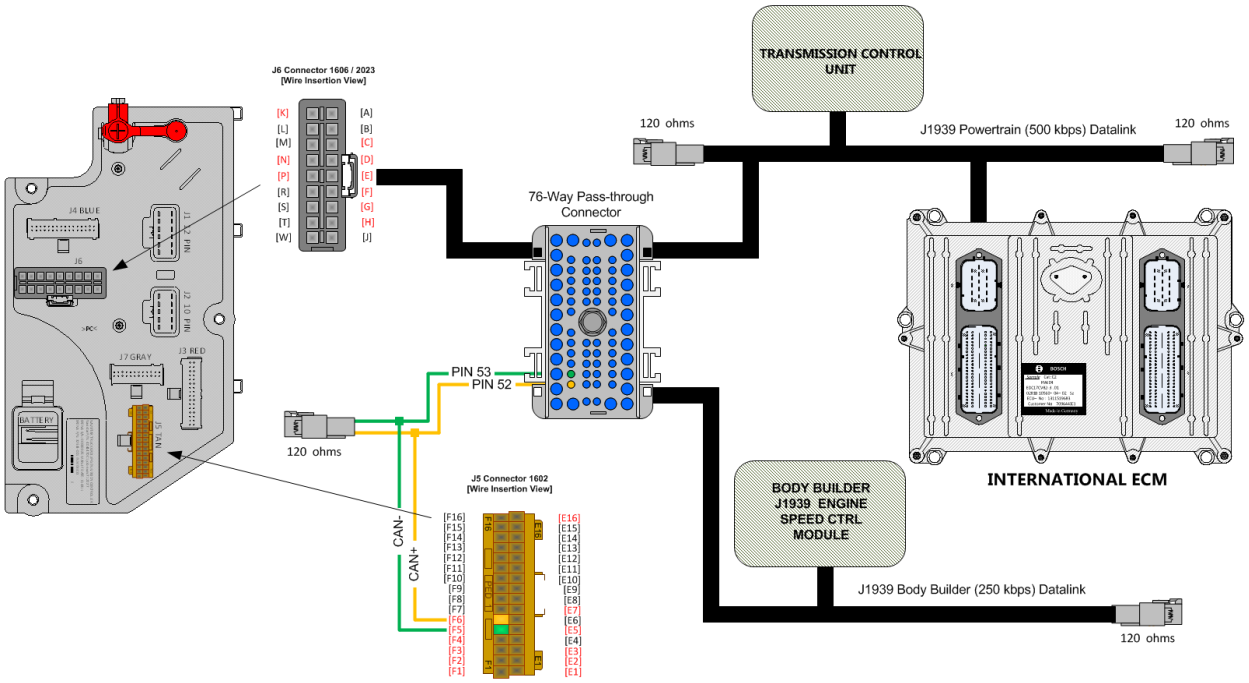

For the operation of Remote Engine Speed Control using TSC1 messaging; The following Body Control Module feature content shall be required.

- Body Control Module software feature 597425 needs to be enabled using The International® Diamond Logic® Builder software along with 0597424.

BCM Software Feature Code (Split Shaft):
0597425 - BCM PROG, **XMSN PTO BODY BUILDER with J1939, Uses SA 0x07 from Body Builder & Send as SA 0x21 to TCM on the Powertrain Bus.**

This feature code enables BCM communication of the following CAN messages:

- *Send At_Least_One_PTO_Engaged – PGN 64932 SPN 3948*
- *Send PTO1_Operation_Msg – PGN 64932 SPN 3452.*
- *Send PTO1_Trans_Input_Engmt_Status – PGN 64932 SPN 3460.*
- *Send Transfer_Case_Aux_Equip_Engaged – PGN 61448 SPN 2599*

- Additional Engine Control Module programmable parameters (PPID) must be appropriately set in accordance with the customer's requirements using International's NED or SDS software tool.

ECM Split Shaft Software Programmable Parameter Identification:

Description	Recommended Value

Transfer Case Input Mode Select	Split Shaft Engaged (1)
Transfer Case Switch Signal Source	CAN (1)
Vehicle Speed Source Selection When Split Shaft is Active	Wheel Speed Selected (0)

Note: *Split shaft mode allows the customer to run remote stationary PTO in gear without accumulating mileage.*

In addition, Fire Apparatus Pump Engagement (SPN 2599) shall be provided by customer's remote engine speed control module from SA 0x07

- SPN 2599 = 1 (Continuously)
- This is a transfer case switch input to ECM.

PGN 61448 (0XF008) Data			
Information to be used for a hydraulic pressure governing control system			
Transmission Repetition Rate	50ms		
Data Length	8		
Extended Data Page	0		
Data Page	0		
PDU Format	240		
PDU Specific	8		
Default Priority	6		
Parameter Group Number	61448 (0XF008)		
Start Position	**Length**	**Parameter Name**	**SPN**
3.5	2 bits	Fire Apparatus Pump Engagement	2599
Additional SPN (2599) Data			
SPN 2599	Fire Apparatus Pump Engagement		
The measured status of the pump used to provide water in firefighting apparatus for distribution of water through water cannons of fire hoses.			
00 – Pump not engaged			
01 – Pump engaged			
10 – Error			
11 – Not available			
Data Length	2 bits		
Resolution	4 states/2 bit, 0 offset		
Data Range	0 to 3	Operational Range: same as data range	
Type	Measured		
Supporting Information			
PGN reference	61448		

PGN 61448 (0XF008) Data

ECM General PTO Software Programmable Parameter Identification:

Description	Recommended Value
Vehicle Speed Source Selection When Split Shaft is Active	Wheel Speed Selected When Split Shaft is Enabled (0)
Transfer Case Switch Signal Source	CAN (1)
Vehicle Speed Signal Mode	Public J1939/CAN OSS (3)
Transfer Case Input Mode Select	Driveline Engaged (0)
Master Switch for Setting Source	CAN (1)

Parts Associated with This Feature:

PART NUMBER	DESCRIPTION
BODY CONTROL MODULE J5 CONNECTOR PARTS	
3522073C1	**32-WAY BODY CONTROLLER J5 (1601/1602) CONNECTOR WIRE TERMINAL 18/20-GAUGE**
3534303C1	**32-WAY BODY CONTROLLER J5 (1601/1602) CONNECTOR WIRE TERMINAL 20/22-GAUGE**

References:
Refer to the applicable International® Circuit Diagrams and Service Manuals.

19. Fog, Plow, and Guide Post Accommodation Packages

19.1. 8585: TOGGLE SWITCH, AUXILIARY and Wiring; For Driving Lights or Fog Lights Mounted by Customer.

Feature Applicability to Vehicle Platforms:

- Heavy Vocational (HV)
- Line Haul Transport (LT)
- Medium Vocational (MV)
- Regional Haul (RH)

Extended Description: Feature code 08585 comes with the fog light system dash switch and wiring only for customer furnished fog lights. 08585 operates as follows: to turn on the customer furnished fog lamps; the headlamps must be on and in the low beam position. The lamps will go off if the headlamps are switched to high beam. 08585 is available on MV models.

System Block Diagram:

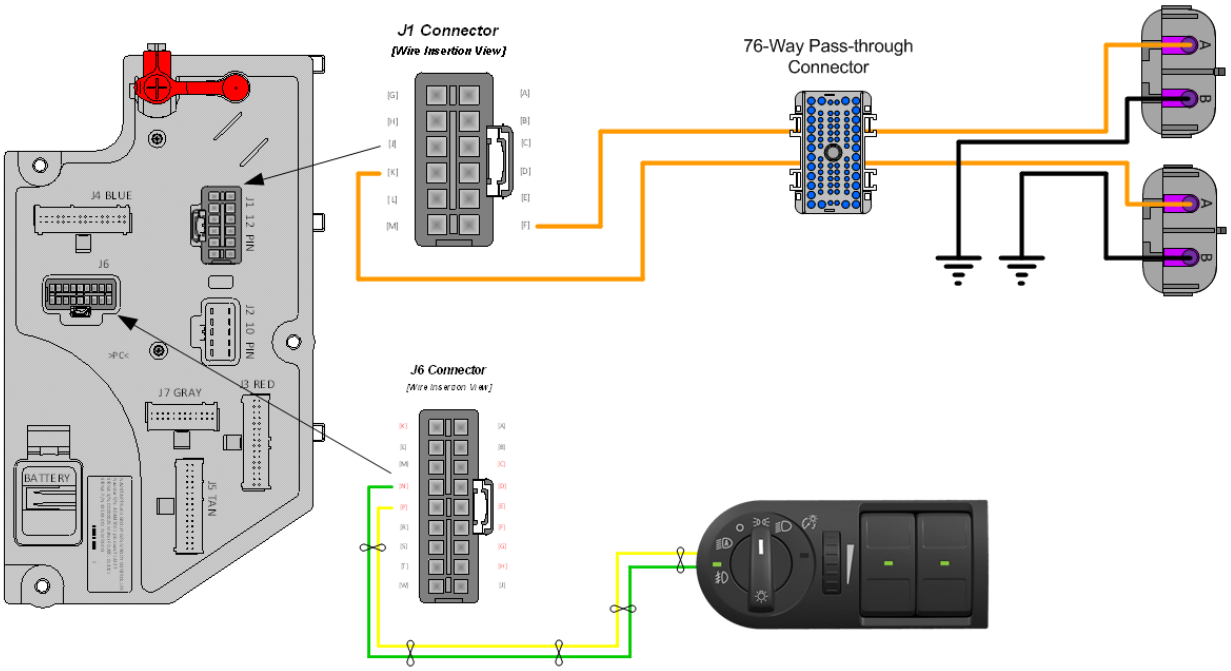

Body Controller Software Feature Codes:

- 597011 - BCM PROG, FOG LIGHT (LCM)

Body Controller Software Feature Code Parameters:

Parameter	ID	Description	Default	Units	Min	Max	Step
Left_Fog_Light_ Hi_Current	2309	Left Fog Light High Current Detection Level (Amps)	10	A	0	10	0.1
Left_Fog_Light_ Lo_Current	2310	Left Fog Light Low Current Detection Level (Amps)	0.5	A	0	10	0.1
Left_Fog_Light_ OC_Current	2311	Left Fog Light Open Circuit Detection Level (Amps)	0.5	A	0	10	0.1
Right_Fog_Light _Hi_Current	2312	Right Fog Light High Current Detection Level (Amps)	10	A	0	10	0.1
Right_Fog_Light _Lo_Current	2313	Right Fog Light Low Current Detection Level (Amps)	0.5	A	0	10	0.1
Right_Fog_Light _OC_Current	2314	Right Fog Light Open Circuit Detection Level (Amps)	0.5	A	0	10	0.1

Parameter Definitions:

- **Left_Fog_Light_Hi_Current** - If the current in the left fog light circuit exceeds the level set by this parameter, the Body Controller (BCM) will shut off the circuit and register a fault code.

- **Left_Fog_Light_Lo_Current** - If the current in the left fog light circuit falls below the level set by this parameter, the Body Controller (BCM) will register a fault code.

- **Left_Fog_Light_OC_Current** - This parameter detects open circuit in the left fog light, the Body Controller (BCM) will register a fault code.

- **Right_Fog_Light_Hi_Current** - If the current in the right fog light circuit exceeds the level set by this parameter, the Body Controller (BCM) will shut off the circuit and register a fault code.

- **Right_Fog_Light_Lo_Current** - If the current in the right fog light circuit falls below the level set by this parameter, the Body Controller (BCM) will register a fault code.

- **Right_Fog_Light_OC_Current** - This parameter detects open circuit in the right fog light, the Body Controller (BCM) will register a fault code.

Parts Associated with This Feature:

PART NUMBERS	DESCRIPTION
FOG LIGHT CONNECTOR (FEMALE CONNECTOR BODY)	
0587567C91	2-WAY CONNECTOR BODY
1673748C1	WIRE TERMINAL 12-GAUGE
0587577C1	WIRE TERMINAL 14/16-GAUGE
0589391C1	WIRE TERMINAL SEAL 12-GAUGE
1667735C1	WIRE TERMINAL SEAL 14/16-GAUGE
FOG LIGHT CONNECTOR (MALE CONNECTOR BODY)	
0587568C91	2-WAY CONNECTOR BODY (DELPHI WEATHERPACK SEALED 2.6MM FEM 2W 20 AMPS)
1673747C1	WIRE TERMINAL 16-GAUGE (DELPHI WEATHERPACK 2.6MM MALE 12 AWG)
0587575C1	WIRE TERMINAL 16-GAUGE (DELPHI WEATHERPACK 2.6MM MALE 16-14 AWG)
0589391C1	WIRE TERMINAL 12-GUAGE (DELPHI BLUE 1W CAVITY SEAL PN:15324996)
1667735C1	WIRE TERMINAL 16-GUAGE (DELPHI BLUE 1W CAVITY SEAL PN:15324996)

Parts Associated with Fog Light Feature

How to Test This Feature:
1. Activate fog light switch with the IGN key on and the headlamp switch on the low-beam mode.
2. Verify that pin F (labeled Left_Fog_Light) and pin K (labeled Right_Fog_Light) in DLB located in connector
(#1603 J1) are providing battery voltage.
3. Verify that the fog lights are functioning correctly.
4. Turn the fog light switch OFF.
5. Verify that the fog light output goes OFF.

Note: This feature uses body controller-based software controls which can be diagnosed with The International® Diamond Logic® Builder software (see local dealer if not owned).

References:
Refer to the applicable International® Circuit Diagrams and Service Manuals.

19.2. 08THJ: AUXILIARY HARNESS 3.0’ for Auxiliary Front Headlights and Turn Signals for Front Plow Applications.

Feature Applicability to Vehicle Platforms:

- Heavy Vocational (HV)
- Medium Vocational (MV)

Extended Description: When front-mounted equipment blocks the vehicle headlamps and turn lamps, such as a snowplow, this feature code is available to connect additional lamps to be used in place of the normal headlamps. This feature provides a 3-foot extension harness with a sealed 7-way connector cap for front-mounted auxiliary headlights, park, or identification, right turn signal, left turn signal and ground. The connector is located behind the driver’s side headlight under the hood.
The harness and connector provide a 15-Amp high and low beam feed, a 10-Amp right and left turn signal feed and a 20-Amp park light feed. The connector comes with a mating connector and sealing plugs pre-installed. The auxiliary park or identification, right and left turn signals are directly tied to the respective front lighting circuits. When the headlight switch is turned to the PARK or ON position, both the vehicle park and auxiliary park lights will come on. If the turn signal switch is activated, both the vehicle turns, and auxiliary turn signal lights will come on.

System Block Diagram:

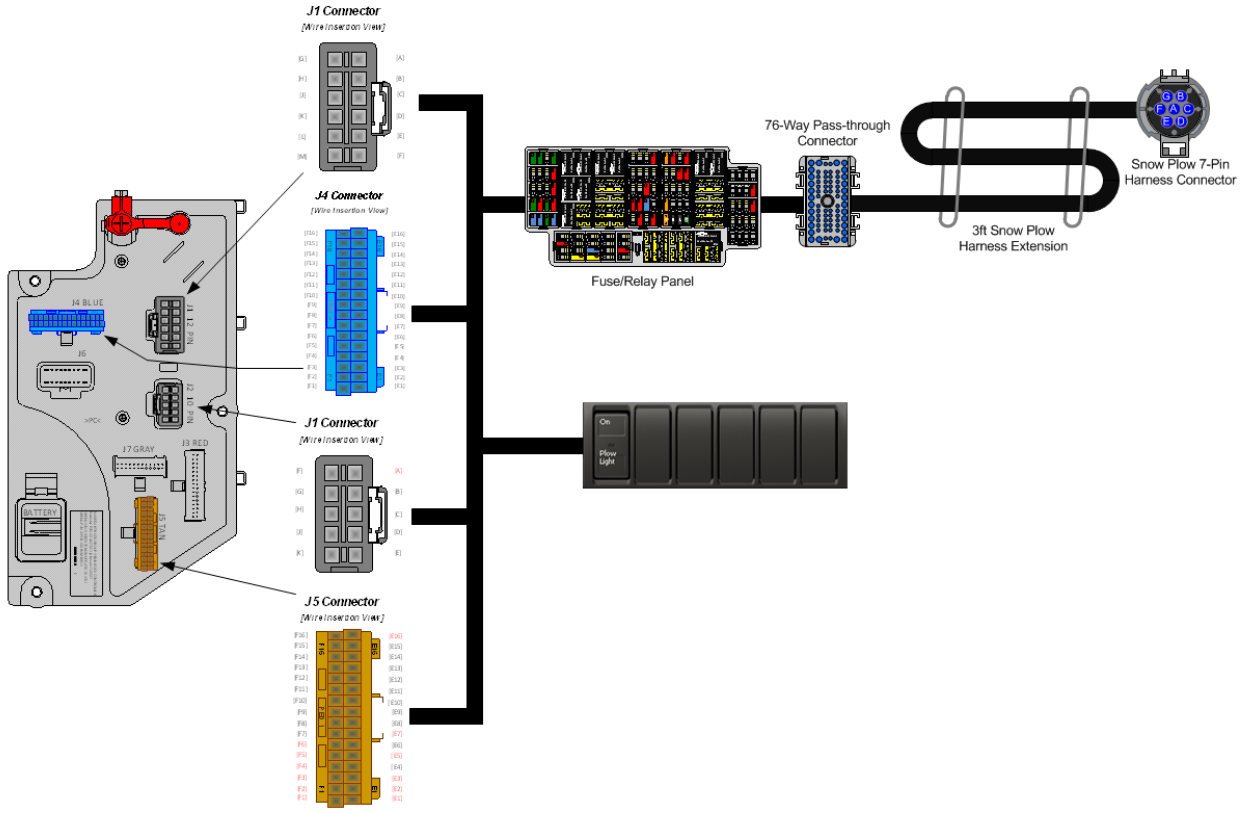

Body Controller Software Feature Codes:

- 597301 - BCM PROG, SNOW PLOW LIGHTS GEN 4

Parts Associated with This Feature:

PART NUMBER	DESCRIPTION
7-WAY BODY LIGHTING CONNECTOR 4450 (VEHICLE HARNESS)	
2039311C91	7–WAY CONNECTOR
2039342C1	7-WAYCONNECTOR LOCK
2039344C1	12-GAUGE TERMINAL
3535486C1	14-GAUGE TERMINAL
2039343C1	16-GAUGE TERMINAL
0589390C1	12-GAUGE TERMINAL SEAL
0589391C1	14-GAUGE TERMINAL SEAL
1652325C1	16-GAUGE TERMINAL SEAL
7-WAY BODY LIGHTING MATING CONNECTOR FOR 4450 (BODY BUILDER HARNESS)	
2039312C91	7-WAY CONNECTOR (SUPPLIED BY CUSTOMER)
2039342C1	7-WAY CONNECTOR LOCK
1687848C1	12-GAUGE TERMINAL
2033912C1	14-GAUGE TERMINAL
2033911C1	16-GAUGE TERMINAL

0589390C1	12-GAUGE TERMINAL SEAL
0589391C1	14-GAUGE TERMINAL SEAL
1652325C1	16-GAUGE TERMINAL SEAL

Parts Associated with Guide Post Light Feature

How to Test This Feature:
1. Activate the plow light switch in the dash using the Diamond Logic® Builder software for switch locations.
2. Turn on vehicle park lights.
3. Verify that auxiliary connector Cavity E has battery voltage levels present.
4. Turn ON vehicle headlights to the LOW BEAM position.
5. Verify that auxiliary connector Cavity C has battery voltage levels present.
6. Turn vehicle headlights to the HIGH BEAM position.

Note: This feature uses body controller-based software controls which can be diagnosed with The International® Diamond Logic® Builder software (see local dealer if not owned).

References:
Refer to the applicable International® Circuit Diagrams and Service Manuals.

19.3. 08THV: DISCONNECT, FRONT HARNESS for Guide Post Lights; Connectors Located at Headlight Connection, for Customer Installation.

Feature Applicability to Vehicle Platforms:

- Heavy Vocational (HV)
- Medium Vocational (MV)

Extended Description: This feature provides two additional connectors located in the front wiring harness for front parking or identification lights. This feature is commonly used for customer or Body Builder added guidepost lights typically mounted at each end of the front bumper. These connectors come with mating connectors and sealing plugs pre-installed. The guide post light circuit is directly tied to the vehicle parking light system, so when the headlight switch is turned to the park or on position, these auxiliary lights will turn on with the standard vehicle lighting. This feature should be used in any application where operation in tight spaces requires constant identification of the vehicle's width.

System Block Diagram:

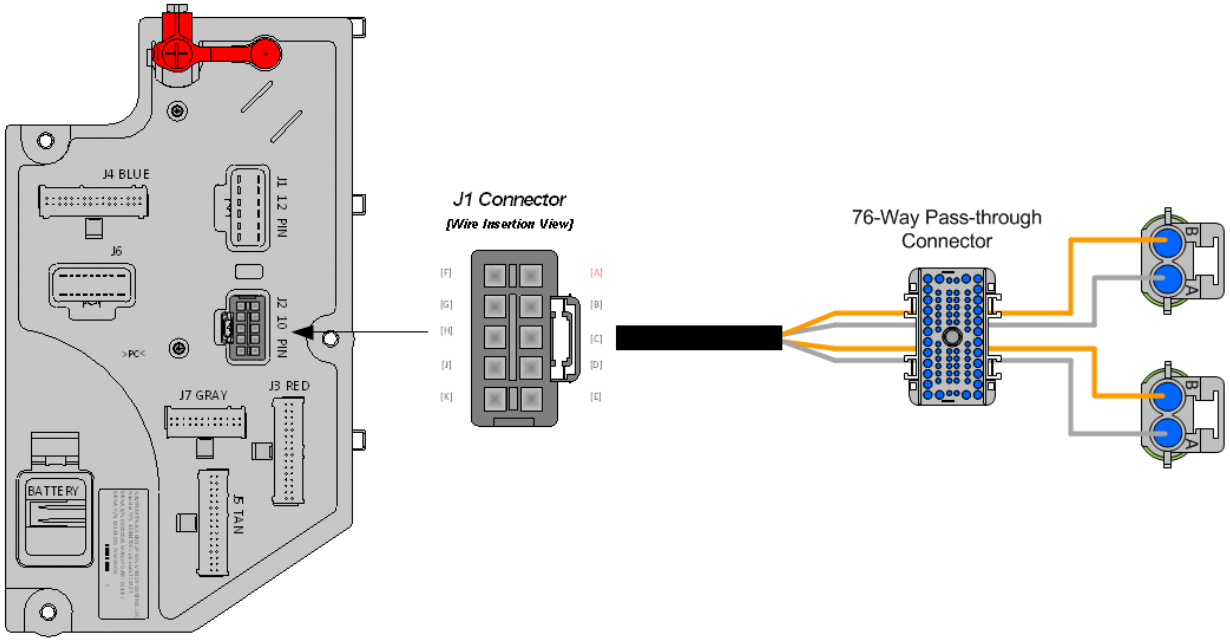

Parts Associated with This Feature:

PART NUMBER	DESCRIPTION
WORK LIGHT (CHASSIS HARNESS CONNECTOR PARTS)	
1661778C1	2-WAY CONNECTOR BODY
1661875C1	WIRE TERMINAL 16-GAUGE
1661874C1	CONNECTOR LOCK
1661872C1	WIRE TERMINAL SEAL 16-GAUGE

WORK LIGHT (CHASSIS HARNESS MATING CONNECTOR PARTS)	
3543888C1	2-WAY CONNECTOR BODY
1661874C1	CONNECTOR LOCK
1667742C1	WIRE TERMINAL 16-GUAGE
1661872C1	WIRE TERMINAL SEAL 16-GAUGE

Parts Associated with Guide Post Light Feature

How to Test This Feature:
Disconnect, Front Harness for Guide Post Lights; Connectors Located at Headlight Connection, for Customer Installation.
TESTING
1. Turn the Headlight switch to PARK position and verify that both right and left guide post lights are on. 2. Turn the Headlight switch to ON position and verify that both right and left guide post lights are on.

Note: This feature uses body controller-based software controls which can be diagnosed with The International® Diamond Logic® Builder software (see local dealer if not owned).

References:
Refer to the applicable International® Circuit Diagrams and Service Manuals.

19.4. 08TNP: AUXILIARY HARNESS 5.0’ for Auxiliary Front Headlights and Turn Signals for Front Plow Applications.

Feature Applicability to Vehicle Platforms:
- Heavy Vocational (HV)

Extended Description: When front-mounted equipment blocks the vehicle headlamps and turn lamps, such as a snowplow, this feature code is available to connect additional lamps to be used in place of the normal headlamps. This feature provides a 5-foot extension harness with a sealed 7-way connector cap for front-mounted.
auxiliary headlights, park, or identification, right turn signal, left turn signal and ground. The connector is located behind the driver’s side headlight under the hood.
The harness and connector provide a 15-Amp high and low beam feed, a 10-Amp right and left turn signal feed and a 20-Amp park light feed. The connector comes with a mating connector and sealing plugs pre-installed. The auxiliary park or identification, right and left turn signals are directly tied to the respective front lighting circuits. When the headlight switch is turned to the PARK or ON position, both the vehicle park and auxiliary park lights will come on. If the turn signal switch is activated, both the vehicle turns, and auxiliary turn signal lights will come on.

System Block Diagram:

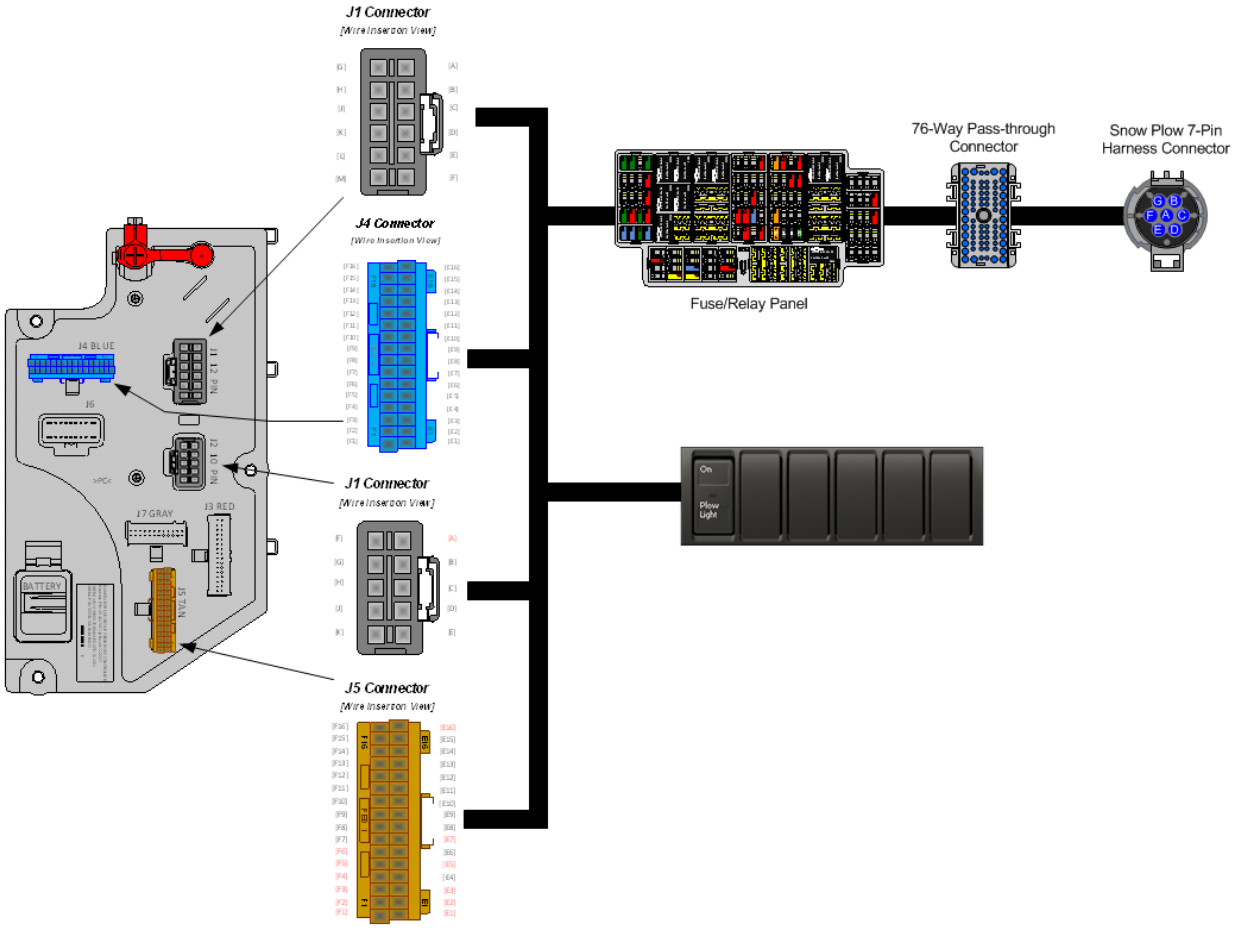

Body Controller Software Feature Codes:

- 597301 - BCM PROG, SNOW PLOW LIGHTS GEN 4

Parts Associated with This Feature:

PART NUMBER	DESCRIPTION
7-WAY BODY LIGHTING CONNECTOR 4450 (VEHICLE HARNESS)	
2039311C91	7–WAY CONNECTOR
2039342C1	7-WAYCONNECTOR LOCK
2039344C1	12-GAUGE TERMINAL
3535486C1	14-GAUGE TERMINAL
2039343C1	16-GAUGE TERMINAL
0589390C1	12-GAUGE TERMINAL SEAL
0589391C1	14-GAUGE TERMINAL SEAL
1652325C1	16-GAUGE TERMINAL SEAL
7-WAY BODY LIGHTING MATING CONNECTOR FOR 4450 (BODY BUILDER HARNESS)	
2039312C91	7-WAY CONNECTOR (SUPPLIED BY CUSTOMER)

2039342C1	7-WAY CONNECTOR LOCK
1687848C1	12-GAUGE TERMINAL
2033912C1	14-GAUGE TERMINAL
2033911C1	16-GAUGE TERMINAL
0589390C1	12-GAUGE TERMINAL SEAL
0589391C1	14-GAUGE TERMINAL SEAL
1652325C1	16-GAUGE TERMINAL SEAL

Parts Associated with Auxiliary Snow Plow Light Feature

How to Test This Feature:
1. Activate the plow light switch in the dash using the Diamond Logic® Builder software for switch locations.
2. Turn on vehicle park lights.
3. Verify that auxiliary connector Cavity E has battery voltage levels present.
4. Turn ON vehicle headlights to the LOW BEAM position.
5. Verify that auxiliary connector Cavity C has battery voltage levels present.
6. Turn vehicle headlights to the HIGH BEAM position.

Note: This feature uses body controller-based software controls which can be diagnosed with The International® Diamond Logic® Builder software (see local dealer if not owned).

References:
Refer to the applicable International® Circuit Diagrams and Service Manuals.

19.5. 08WLM: FOG LIGHTS {Peterson} Amber, Halogen, Rectangular.

Extended Description: Feature code 08WLN comes with the fog light system (wiring and fog lamps) completely installed. 08WLN operates as follows: to turn on the fog lamps; the headlamps must be on and in the low beam position. The lamps will go off if the headlamps are switched to high beam. 08WLN is available on HV models.

System Block Diagram:

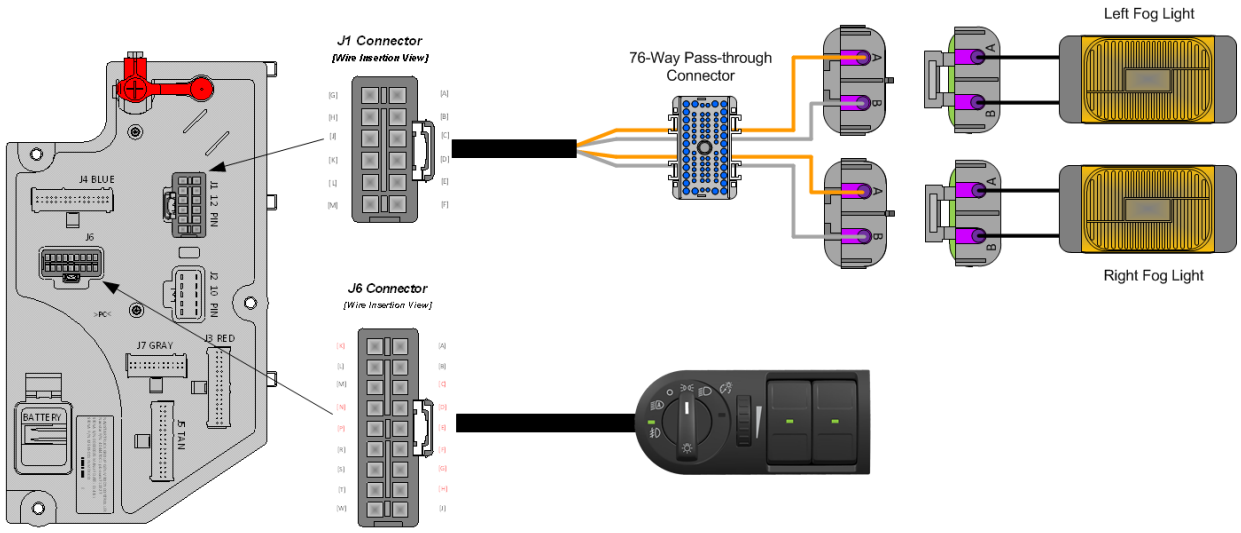

Body Controller Software Feature Codes:

- 597011 - BCM PROG, FOG LIGHTS, Lighted Control Module (LCM)

Body Controller Software Feature Code Parameters:

Parameter	ID	Description	Default	Units	Min	Max	Step
Left_Fog_Light_ Hi_Current	2309	Left Fog Light High Current Detection Level (Amps)	10	A	0	10	0.1
Left_Fog_Light_ Lo_Current	2310	Left Fog Light Low Current Detection Level (Amps)	0.5	A	0	10	0.1
Left_Fog_Light_ OC_Current	2311	Left Fog Light Open Circuit Detection Level (Amps)	0.5	A	0	10	0.1
Right_Fog_Light _Hi_Current	2312	Right Fog Light High Current Detection Level (Amps)	10	A	0	10	0.1
Right_Fog_Light _Lo_Current	2313	Right Fog Light Low Current Detection Level (Amps)	0.5	A	0	10	0.1
Right_Fog_Light _OC_Current	2314	Right Fog Light Open Circuit Detection Level (Amps)	0.5	A	0	10	0.1

Parameter Definitions:

- **Left_Fog_Light_Hi_Current** - If the current in the left fog light circuit exceeds the level set by this parameter, the Body Controller (BCM) will shut off the circuit and register a fault code.

- **Left_Fog_Light_Lo_Current** - If the current in the left fog light circuit falls below the level set by this parameter, the Body Controller (BCM) will register a fault code.

- **Left_Fog_Light_OC_Current** - This parameter detects open circuit in the left fog light, the Body Controller (BCM) will register a fault code.

- **Right_Fog_Light_Hi_Current** - If the current in the right fog light circuit exceeds the level set by this parameter, the Body Controller (BCM) will shut off the circuit and register a fault code.

- **Right_Fog_Light_Lo_Current** - If the current in the right fog light circuit falls below the level set by this parameter, the Body Controller (BCM) will register a fault code.

- **Right_Fog_Light_OC_Current** - This parameter detects open circuit in the right fog light, the Body Controller (BCM) will register a fault code.

Parts Associated with This Feature:

PART NUMBERS	DESCRIPTION
FOG LIGHT CONNECTOR (FEMALE CONNECTOR BODY)	
0587567C91	2-WAY CONNECTOR BODY
1673748C1	WIRE TERMINAL 12-GAUGE
0587577C1	WIRE TERMINAL 14/16-GAUGE
0589391C1	WIRE TERMINAL SEAL 12-GAUGE
1667735C1	WIRE TERMINAL SEAL 14/16-GAUGE
FOG LIGHT CONNECTOR (MALE CONNECTOR BODY)	
0587568C91	2-WAY CONNECTOR BODY (DELPHI WEATHERPACK SEALED 2.6MM FEM 2W 20 AMPS)
1673747C1	WIRE TERMINAL 16-GAUGE (DELPHI WEATHERPACK 2.6MM MALE 12 AWG)
0587575C1	WIRE TERMINAL 16-GAUGE (DELPHI WEATHERPACK 2.6MM MALE 16-14 AWG)
0589391C1	WIRE TERMINAL 12-GUAGE (DELPHI BLUE 1W CAVITY SEAL PN:15324996)
1667735C1	WIRE TERMINAL 16-GUAGE (DELPHI BLUE 1W CAVITY SEAL PN:15324996)

Parts Associated with Fog Light Feature

How to Test This Feature:
1. Activate fog light switch with the IGN key on and the headlamp switch on the low-beam mode.
2. Verify that pin F (labeled Left_Fog_Light) and pin K (labeled Right_Fog_Light) in DLB located in connector
(#1603 J1) are providing battery voltage.
3. Verify that the fog lights are functioning correctly.
4. Turn the fog light switch OFF.
5. Verify that the fog light output goes OFF.

Note: This feature uses body controller-based software controls which can be diagnosed with The International® Diamond Logic® Builder software (see local dealer if not owned).

References:
Refer to the applicable International® Circuit Diagrams and Service Manuals.

19.6. 08WLN: FOG LIGHTS {Peterson} Clear, Halogen, Rectangular.

Extended Description: Feature code 08WLN comes with the fog light system (wiring and fog lamps) completely installed. 08WLN operates as follows: to turn on the fog lamps; the headlamps must be on and in the low beam position. The lamps will go off if the headlamps are switched to high beam. 08WLN is available on HV models.

System Block Diagram:

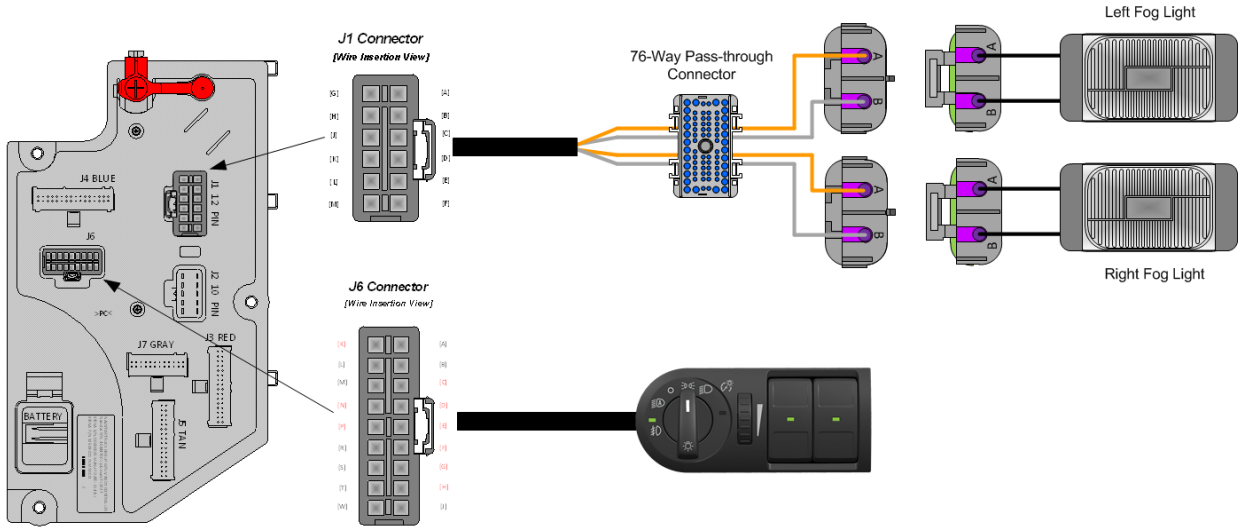

Body Controller Software Feature Codes:

- 597011 - BCM PROG, FOG LIGHTS, Lighted Control Module (LCM)

Body Controller Software Feature Code Parameters:

Parameter	ID	Description	Default	Units	Min	Max	Step
Left_Fog_Light_Hi_Current	2309	Left Fog Light High Current Detection Level (Amps)	10	A	0	10	0.1
Left_Fog_Light_Lo_Current	2310	Left Fog Light Low Current Detection Level (Amps)	0.5	A	0	10	0.1
Left_Fog_Light_OC_Current	2311	Left Fog Light Open Circuit Detection Level (Amps)	0.5	A	0	10	0.1
Right_Fog_Light_Hi_Current	2312	Right Fog Light High Current Detection Level (Amps)	10	A	0	10	0.1
Right_Fog_Light_Lo_Current	2313	Right Fog Light Low Current Detection Level (Amps)	0.5	A	0	10	0.1
Right_Fog_Light_OC_Current	2314	Right Fog Light Open Circuit Detection Level (Amps)	0.5	A	0	10	0.1

Parameter Definitions:

- **Left_Fog_Light_Hi_Current** - If the current in the left fog light circuit exceeds the level set by this parameter, the Body Controller (BCM) will shut off the circuit and register a fault code.

- **Left_Fog_Light_Lo_Current** - If the current in the left fog light circuit falls below the level set by this parameter, the Body Controller (BCM) will register a fault code.

- **Left_Fog_Light_OC_Current** - This parameter detects open circuit in the left fog light, the Body Controller (BCM) will register a fault code.

- **Right_Fog_Light_Hi_Current** - If the current in the right fog light circuit exceeds the level set by this parameter, the Body Controller (BCM) will shut off the circuit and register a fault code.

- **Right_Fog_Light_Lo_Current** - If the current in the right fog light circuit falls below the level set by this parameter, the Body Controller (BCM) will register a fault code.

- **Right_Fog_Light_OC_Current** - This parameter detects open circuit in the right fog light, the Body Controller (BCM) will register a fault code.

Parts Associated with This Feature:

PART NUMBERS	DESCRIPTION
FOG LIGHT CONNECTOR (FEMALE CONNECTOR BODY)	
0587567C91	2-WAY CONNECTOR BODY
1673748C1	WIRE TERMINAL 12-GAUGE
0587577C1	WIRE TERMINAL 14/16-GAUGE
0589391C1	WIRE TERMINAL SEAL 12-GAUGE
1667735C1	WIRE TERMINAL SEAL 14/16-GAUGE
FOG LIGHT CONNECTOR (MALE CONNECTOR BODY)	
0587568C91	2-WAY CONNECTOR BODY (DELPHI WEATHERPACK SEALED 2.6MM FEM 2W 20 AMPS)
1673747C1	WIRE TERMINAL 16-GAUGE (DELPHI WEATHERPACK 2.6MM MALE 12 AWG)
0587575C1	WIRE TERMINAL 16-GAUGE (DELPHI WEATHERPACK 2.6MM MALE 16-14 AWG)
0589391C1	WIRE TERMINAL 12-GUAGE (DELPHI BLUE 1W CAVITY SEAL PN:15324996)
1667735C1	WIRE TERMINAL 16-GUAGE (DELPHI BLUE 1W CAVITY SEAL PN:15324996)

Parts Associated with Fog Light Feature

How to Test This Feature:
1. Activate fog light switch with the IGN key on and the headlamp switch on the low-beam mode.
2. Verify that pin F (labeled Left_Fog_Light) and pin K (labeled Right_Fog_Light) in DLB located in connector
(#1603 J1) are providing battery voltage.
3. Verify that the fog lights are functioning correctly.
4. Turn the fog light switch OFF.
5. Verify that the fog light output goes OFF.

Note: This feature uses body controller-based software controls which can be diagnosed with The International® Diamond Logic® Builder software (see local dealer if not owned).

References:
Refer to the applicable International® Circuit Diagrams and Service Manuals.

19.7. 08WPL: FOG LIGHTS (2) Amber, Oval, With H355W Halogen Bulb.

Feature Applicability to Vehicle Platforms:

- Heavy Vocational (HV)
- Medium Vocational (MV)

Extended Description: Feature code 08WPL comes with the fog light system (wiring and fog lamps) completely installed. 08WPL operates as follows: to turn on the fog lamps; the headlamps must be on and in the low beam position. The lamps will go off if the headlamps are switched to high beam. 08WPL is available on MV models.

System Block Diagram:

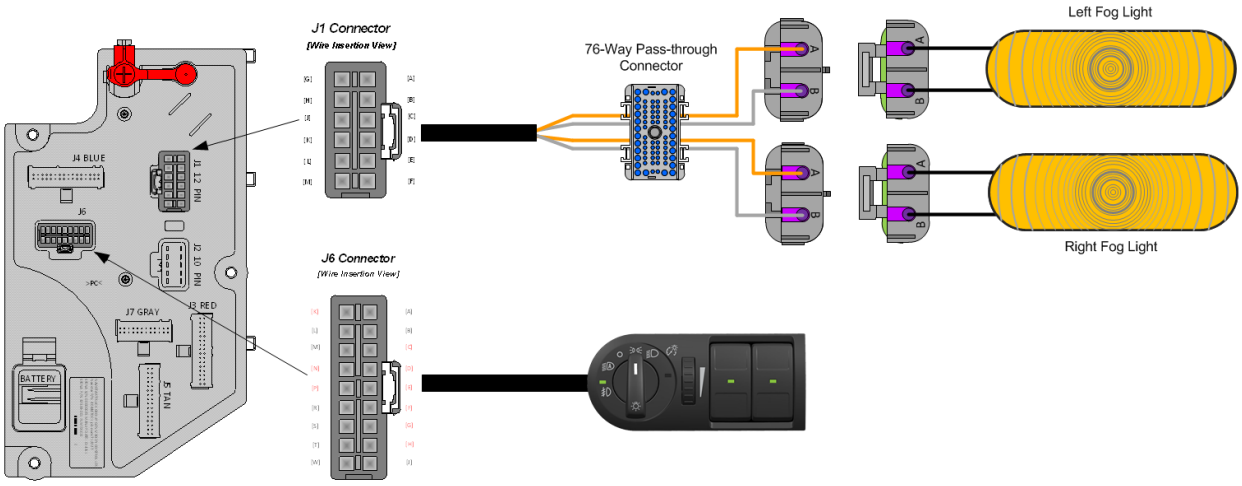

Body Controller Software Feature Codes:

- 597011 - BCM PROG, FOG LIGHT (LCM)

Body Controller Software Feature Code Parameters:

Parameter	ID	Description	Default	Units	Min	Max	Step
Left_Fog_Light_ Hi_Current	2309	Left Fog Light High Current Detection Level (Amps)	10	A	0	10	0.1
Left_Fog_Light_ Lo_Current	2310	Left Fog Light Low Current Detection Level (Amps)	0.5	A	0	10	0.1
Left_Fog_Light_ OC_Current	2311	Left Fog Light Open Circuit Detection Level (Amps)	0.5	A	0	10	0.1
Right_Fog_Light _Hi_Current	2312	Right Fog Light High Current Detection Level (Amps)	10	A	0	10	0.1
Right_Fog_Light _Lo_Current	2313	Right Fog Light Low Current Detection Level (Amps)	0.5	A	0	10	0.1
Right_Fog_Light _OC_Current	2314	Right Fog Light Open Circuit Detection Level (Amps)	0.5	A	0	10	0.1

Parameter Definitions:

- **Left_Fog_Light_Hi_Current** - If the current in the left fog light circuit exceeds the level set by this parameter, the Body Controller (BCM) will shut off the circuit and register a fault code.

- **Left_Fog_Light_Lo_Current** - If the current in the left fog light circuit falls below the level set by this parameter, the Body Controller (BCM) will register a fault code.

- **Left_Fog_Light_OC_Current** - This parameter detects open circuit in the left fog light, the Body Controller (BCM) will register a fault code.

- **Right_Fog_Light_Hi_Current** - If the current in the right fog light circuit exceeds the level set by this parameter, the Body Controller (BCM) will shut off the circuit and register a fault code.

- **Right_Fog_Light_Lo_Current** - If the current in the right fog light circuit falls below the level set by this parameter, the Body Controller (BCM) will register a fault code.

- **Right_Fog_Light_OC_Current** - This parameter detects open circuit in the right fog light, the Body Controller (BCM) will register a fault code.

Parts Associated with This Feature:

PART NUMBERS	DESCRIPTION
FOG LIGHT CONNECTOR (FEMALE CONNECTOR BODY)	
0587567C91	2-WAY CONNECTOR BODY
1673748C1	WIRE TERMINAL 12-GAUGE
0587577C1	WIRE TERMINAL 14/16-GAUGE
0589391C1	WIRE TERMINAL SEAL 12-GAUGE
1667735C1	WIRE TERMINAL SEAL 14/16-GAUGE
FOG LIGHT CONNECTOR (MALE CONNECTOR BODY)	
0587568C91	2-WAY CONNECTOR BODY (DELPHI WEATHERPACK SEALED 2.6MM FEM 2W 20 AMPS)
1673747C1	WIRE TERMINAL 16-GAUGE (DELPHI WEATHERPACK 2.6MM MALE 12 AWG)
0587575C1	WIRE TERMINAL 16-GAUGE (DELPHI WEATHERPACK 2.6MM MALE 16-14 AWG)
0589391C1	WIRE TERMINAL 12-GUAGE (DELPHI BLUE 1W CAVITY SEAL PN:15324996)
1667735C1	WIRE TERMINAL 16-GUAGE (DELPHI BLUE 1W CAVITY SEAL PN:15324996)

Parts Associated with Fog Light Feature

How to Test This Feature:
1. Activate fog light switch with the IGN key on and the headlamp switch on the low-beam mode.
2. Verify that pin F (labeled Left_Fog_Light) and pin K (labeled Right_Fog_Light) in DLB located in connector
(#1603 J1) are providing battery voltage.
3. Verify that the fog lights are functioning correctly.
4. Turn the fog light switch OFF.
5. Verify that the fog light output goes OFF.

Note: This feature uses body controller-based software controls which can be diagnosed with The International® Diamond Logic® Builder software (see local dealer if not owned).

References:
Refer to the applicable International® Circuit Diagrams and Service Manuals.

19.8. 08WPM: FOG LIGHTS (2) Clear, Oval, With H355W Halogen Bulb

Feature Applicability to Vehicle Platforms:

- Heavy Vocational (HV)
- Medium Vocational (MV)

Extended Description: Feature code 08WPM comes with the fog light system (wiring and fog lamps) completely installed. 08WPM operates as follows: to turn on the fog lamps; the headlamps must be on and in the low beam position. The lamps will go off if the headlamps are switched to high beam. 08WPM is available on MV models.

System Block Diagram:

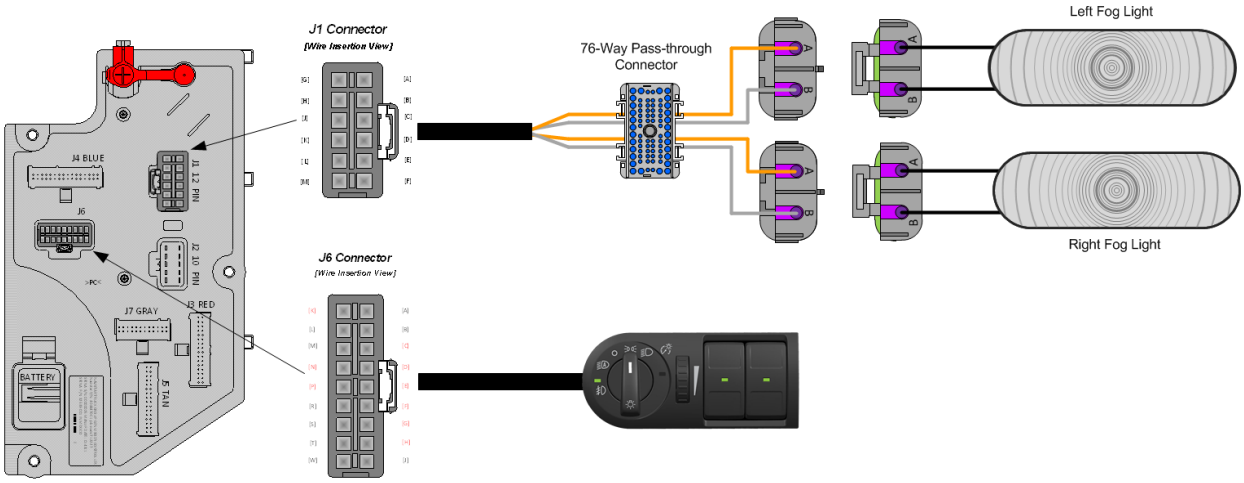

Body Controller Software Feature Codes: (Feature code and description goes below)

- 597011 - BCM PROG, FOG LIGHT (LCM)

Body Controller Software Feature Code Parameters:

Parameter	ID	Description	Default	Units	Min	Max	Step
Left_Fog_Light_ Hi_Current	2309	Left Fog Light High Current Detection Level (Amps)	10	A	0	10	0.1
Left_Fog_Light_ Lo_Current	2310	Left Fog Light Low Current Detection Level (Amps)	0.5	A	0	10	0.1
Left_Fog_Light_ OC_Current	2311	Left Fog Light Open Circuit Detection Level (Amps)	0.5	A	0	10	0.1
Right_Fog_Light _Hi_Current	2312	Right Fog Light High Current Detection Level (Amps)	10	A	0	10	0.1
Right_Fog_Light _Lo_Current	2313	Right Fog Light Low Current Detection Level (Amps)	0.5	A	0	10	0.1
Right_Fog_Light _OC_Current	2314	Right Fog Light Open Circuit Detection Level (Amps)	0.5	A	0	10	0.1

Parameter Definitions:

- **Left_Fog_Light_Hi_Current** - If the current in the left fog light circuit exceeds the level set by this parameter, the Body Controller (BCM) will shut off the circuit and register a fault code.

- **Left_Fog_Light_Lo_Current** - If the current in the left fog light circuit falls below the level set by this parameter, the Body Controller (BCM) will register a fault code.

- **Left_Fog_Light_OC_Current** - This parameter detects open circuit in the left fog light, the Body Controller (BCM) will register a fault code.

- **Right_Fog_Light_Hi_Current** - If the current in the right fog light circuit exceeds the level set by this parameter, the Body Controller (BCM) will shut off the circuit and register a fault code.

- **Right_Fog_Light_Lo_Current** - If the current in the right fog light circuit falls below the level set by this parameter, the Body Controller (BCM) will register a fault code.

- **Right_Fog_Light_OC_Current** - This parameter detects open circuit in the right fog light, the Body Controller (BCM) will register a fault code.

Note/s About Possible Software Feature Conflicts: NONE

Parts Associated with This Feature:

PART NUMBERS	DESCRIPTION
FOG LIGHT CONNECTOR (FEMALE CONNECTOR BODY)	
0587567C91	2-WAY CONNECTOR BODY
1673748C1	WIRE TERMINAL 12-GAUGE
0587577C1	WIRE TERMINAL 14/16-GAUGE
0589391C1	WIRE TERMINAL SEAL 12-GAUGE
1667735C1	WIRE TERMINAL SEAL 14/16-GAUGE
FOG LIGHT CONNECTOR (MALE CONNECTOR BODY)	
0587568C91	2-WAY CONNECTOR BODY (DELPHI WEATHERPACK SEALED 2.6MM FEM 2W 20 AMPS)
1673747C1	WIRE TERMINAL 16-GAUGE (DELPHI WEATHERPACK 2.6MM MALE 12 AWG)
0587575C1	WIRE TERMINAL 16-GAUGE (DELPHI WEATHERPACK 2.6MM MALE 16-14 AWG)
0589391C1	WIRE TERMINAL 12-GUAGE (DELPHI BLUE 1W CAVITY SEAL PN:15324996)
1667735C1	WIRE TERMINAL 16-GUAGE (DELPHI BLUE 1W CAVITY SEAL PN:15324996)

Parts Associated with Fog Light Feature

How to Test This Feature:
1. Activate fog light switch with the IGN key on and the headlamp switch on the low-beam mode.
2. Verify that pin F (labeled Left_Fog_Light) and pin K (labeled Right_Fog_Light) in DLB located in connector
(#1603 J1) are providing battery voltage.
3. Verify that the fog lights are functioning correctly.
4. Turn the fog light switch OFF.
5. Verify that the fog light output goes OFF.

References:
Refer to the applicable International® Circuit Diagrams and Service Manuals.

19.9. 08XJG: FOG LIGHTS (2) Clear, Lens, Halogen, Rectangular, with White Light Source

Feature Applicability to Vehicle Platforms:

- Heavy Vocational (HV)
- Medium Vocational (MV)
- Line Haul Transport (LT)

Extended Description: Feature code 08XJG comes with the fog light system (wiring and fog lamps) completely installed. 08XJG operates as follows: to turn on the fog lamps; the headlamps must be on and in the low beam position. The lamps will go off if the headlamps are switched to high beam.

System Block Diagram:

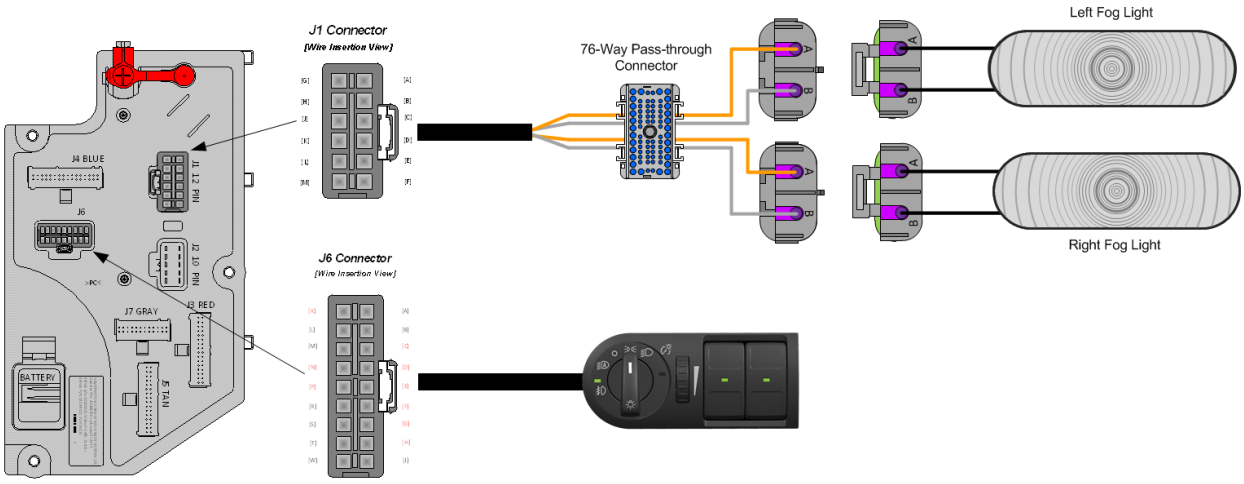

Body Controller Software Feature Codes: (Feature code and description goes below)

- 597011 - BCM PROG, FOG LIGHT (LCM)

Body Controller Software Feature Code Parameters:

Parameter	ID	Description	Default	Units	Min	Max	Step
Left_Fog_Light_ Hi_Current	2309	Left Fog Light High Current Detection Level (Amps)	10	A	0	10	0.1
Left_Fog_Light_ Lo_Current	2310	Left Fog Light Low Current Detection Level (Amps)	0.5	A	0	10	0.1
Left_Fog_Light_ OC_Current	2311	Left Fog Light Open Circuit Detection Level (Amps)	0.5	A	0	10	0.1
Right_Fog_Light _Hi_Current	2312	Right Fog Light High Current Detection Level (Amps)	10	A	0	10	0.1
Right_Fog_Light _Lo_Current	2313	Right Fog Light Low Current Detection Level (Amps)	0.5	A	0	10	0.1
Right_Fog_Light _OC_Current	2314	Right Fog Light Open Circuit Detection Level (Amps)	0.5	A	0	10	0.1

Parameter Definitions:

- **Left_Fog_Light_Hi_Current** - If the current in the left fog light circuit exceeds the level set by this parameter, the Body Controller (BCM) will shut off the circuit and register a fault code.

- **Left_Fog_Light_Lo_Current** - If the current in the left fog light circuit falls below the level set by this parameter, the Body Controller (BCM) will register a fault code.

- **Left_Fog_Light_OC_Current** - This parameter detects open circuit in the left fog light, the Body Controller (BCM) will register a fault code.

- **Right_Fog_Light_Hi_Current** - If the current in the right fog light circuit exceeds the level set by this parameter, the Body Controller (BCM) will shut off the circuit and register a fault code.

- **Right_Fog_Light_Lo_Current** - If the current in the right fog light circuit falls below the level set by this parameter, the Body Controller (BCM) will register a fault code.

- **Right_Fog_Light_OC_Current** - This parameter detects open circuit in the right fog light, the Body Controller (BCM) will register a fault code.

Note/s About Possible Software Feature Conflicts: NONE

Parts Associated with This Feature:

PART NUMBERS	DESCRIPTION
FOG LIGHT CONNECTOR (FEMALE CONNECTOR BODY)	
0587567C91	2-WAY CONNECTOR BODY
1673748C1	WIRE TERMINAL 12-GAUGE
0587577C1	WIRE TERMINAL 14/16-GAUGE
0589391C1	WIRE TERMINAL SEAL 12-GAUGE
1667735C1	WIRE TERMINAL SEAL 14/16-GAUGE
FOG LIGHT CONNECTOR (MALE CONNECTOR BODY)	
0587568C91	2-WAY CONNECTOR BODY (DELPHI WEATHERPACK SEALED 2.6MM FEM 2W 20 AMPS)
1673747C1	WIRE TERMINAL 16-GAUGE (DELPHI WEATHERPACK 2.6MM MALE 12 AWG)
0587575C1	WIRE TERMINAL 16-GAUGE (DELPHI WEATHERPACK 2.6MM MALE 16-14 AWG)
0589391C1	WIRE TERMINAL 12-GUAGE (DELPHI BLUE 1W CAVITY SEAL PN:15324996)
1667735C1	WIRE TERMINAL 16-GUAGE (DELPHI BLUE 1W CAVITY SEAL PN:15324996)

Parts Associated with Fog Light Feature

How to Test This Feature:

1. Activate fog light switch with the IGN key on and the headlamp switch on the low-beam mode.
2. Verify that pin F (labeled Left_Fog_Light) and pin K (labeled Right_Fog_Light) in DLB located in connector
(#1603 J1) are providing battery voltage.
3. Verify that the fog lights are functioning correctly.
4. Turn the fog light switch OFF.
5. Verify that the fog light output goes OFF.

References:
Refer to the applicable International® Circuit Diagrams and Service Manuals.

19.10. 08XJH: FOG LIGHTS (2) Clear, Lens, LED, Rectangular, with White Light Source

Feature Applicability to Vehicle Platforms:

- Heavy Vocational (HV)
- Medium Vocational (MV)
- Line Haul Tractor (LT)
- Regional Haul (RH)

Extended Description: Feature code 08XJH comes with the fog light system (wiring and fog lamps) completely installed. 08HJH operates as follows: to turn on the fog lamps; the headlamps must be on and in the low beam position. The lamps will go off if the headlamps are switched to high beam.

System Block Diagram:

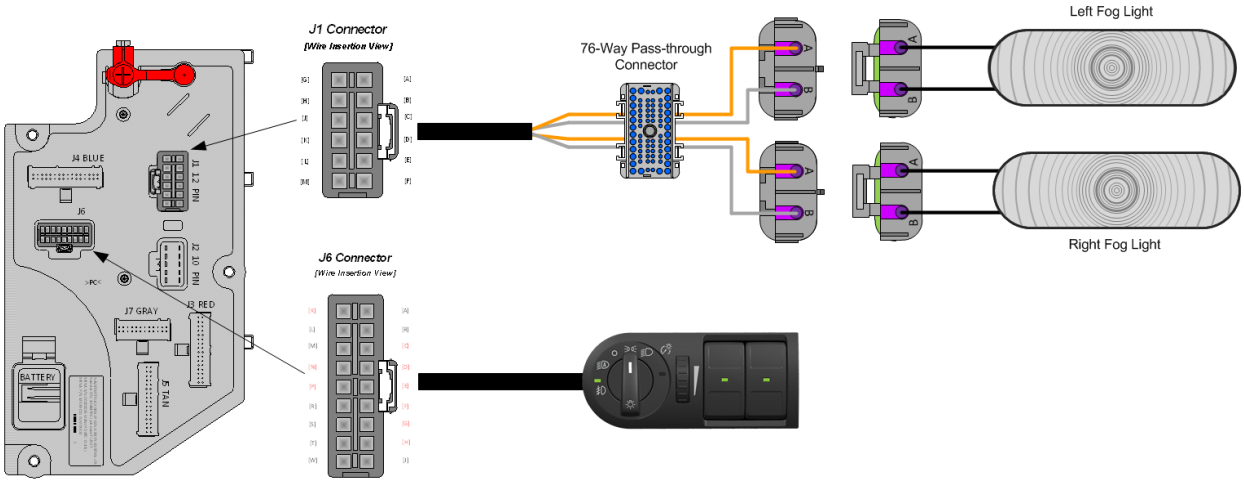

Body Controller Software Feature Codes: (Feature code and description goes below)

- 597011 - BCM PROG, FOG LIGHT (LCM)

Body Controller Software Feature Code Parameters:

Parameter	ID	Description	Default	Units	Min	Max	Step
Left_Fog_Light_Hi_Current	2309	Left Fog Light High Current Detection Level (Amps)	10	A	0	10	0.1
Left_Fog_Light_Lo_Current	2310	Left Fog Light Low Current Detection Level (Amps)	0.5	A	0	10	0.1
Left_Fog_Light_OC_Current	2311	Left Fog Light Open Circuit Detection Level (Amps)	0.5	A	0	10	0.1
Right_Fog_Light_Hi_Current	2312	Right Fog Light High Current Detection Level (Amps)	10	A	0	10	0.1
Right_Fog_Light_Lo_Current	2313	Right Fog Light Low Current Detection Level (Amps)	0.5	A	0	10	0.1
Right_Fog_Light_OC_Current	2314	Right Fog Light Open Circuit Detection Level (Amps)	0.5	A	0	10	0.1

Parameter Definitions:

- **Left_Fog_Light_Hi_Current** - If the current in the left fog light circuit exceeds the level set by this parameter, the Body Controller (BCM) will shut off the circuit and register a fault code.

- **Left_Fog_Light_Lo_Current** - If the current in the left fog light circuit falls below the level set by this parameter, the Body Controller (BCM) will register a fault code.

- **Left_Fog_Light_OC_Current** - This parameter detects open circuit in the left fog light, the Body Controller (BCM) will register a fault code.

- **Right_Fog_Light_Hi_Current** - If the current in the right fog light circuit exceeds the level set by this parameter, the Body Controller (BCM) will shut off the circuit and register a fault code.

- **Right_Fog_Light_Lo_Current** - If the current in the right fog light circuit falls below the level set by this parameter, the Body Controller (BCM) will register a fault code.

- **Right_Fog_Light_OC_Current** - This parameter detects open circuit in the right fog light, the Body Controller (BCM) will register a fault code.

Note/s About Possible Software Feature Conflicts: NONE

Parts Associated with This Feature:

PART NUMBERS	DESCRIPTION
FOG LIGHT CONNECTOR (FEMALE CONNECTOR BODY)	
0587567C91	2-WAY CONNECTOR BODY
1673748C1	WIRE TERMINAL 12-GAUGE
0587577C1	WIRE TERMINAL 14/16-GAUGE
0589391C1	WIRE TERMINAL SEAL 12-GAUGE
1667735C1	WIRE TERMINAL SEAL 14/16-GAUGE
FOG LIGHT CONNECTOR (MALE CONNECTOR BODY)	
0587568C91	2-WAY CONNECTOR BODY (DELPHI WEATHERPACK SEALED 2.6MM FEM 2W 20 AMPS)
1673747C1	WIRE TERMINAL 16-GAUGE (DELPHI WEATHERPACK 2.6MM MALE 12 AWG)
0587575C1	WIRE TERMINAL 16-GAUGE (DELPHI WEATHERPACK 2.6MM MALE 16-14 AWG)
0589391C1	WIRE TERMINAL 12-GUAGE (DELPHI BLUE 1W CAVITY SEAL PN:15324996)
1667735C1	WIRE TERMINAL 16-GUAGE (DELPHI BLUE 1W CAVITY SEAL PN:15324996)

Parts Associated with Fog Light Feature

How to Test This Feature:
1. Activate fog light switch with the IGN key on and the headlamp switch on the low-beam mode.
2. Verify that pin F (labeled Left_Fog_Light) and pin K (labeled Right_Fog_Light) in DLB located in connector
(#1603 J1) are providing battery voltage.
3. Verify that the fog lights are functioning correctly.
4. Turn the fog light switch OFF.
5. Verify that the fog light output goes OFF.

References:
Refer to the applicable International® Circuit Diagrams and Service Manuals.

19.11. 08XJJ: FOG LIGHTS (2) Selective Yellow, LED

Feature Applicability to Vehicle Platforms:

- Heavy Vocational (HV)
- Medium Vocational (MV)

Extended Description: Feature code 08XJJ comes with the fog light system (wiring and fog lamps) completely installed. 08XJJ operates as follows: to turn on the fog lamps; the headlamps must be on and in the low beam position. The lamps will go off if the headlamps are switched to high beam.
System Block Diagram:

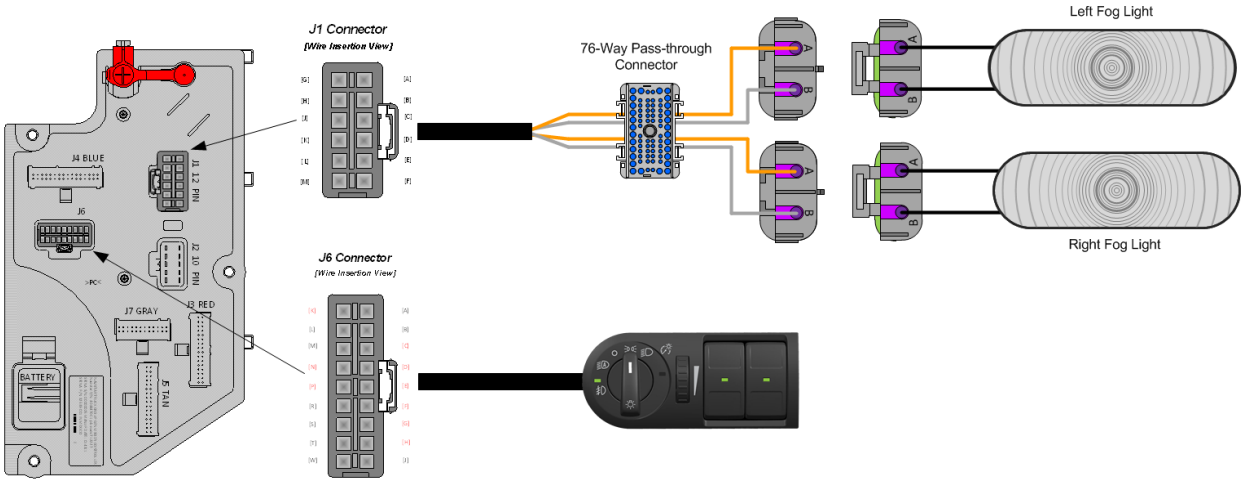

Body Controller Software Feature Codes: (Feature code and description goes below)

- 597011 - BCM PROG, FOG LIGHT (LCM)

Body Controller Software Feature Code Parameters:

Parameter	ID	Description	Default	Units	Min	Max	Step
Left_Fog_Light_ Hi_Current	2309	Left Fog Light High Current Detection Level (Amps)	10	A	0	10	0.1
Left_Fog_Light_ Lo_Current	2310	Left Fog Light Low Current Detection Level (Amps)	0.5	A	0	10	0.1
Left_Fog_Light_ OC_Current	2311	Left Fog Light Open Circuit Detection Level (Amps)	0.5	A	0	10	0.1
Right_Fog_Light _Hi_Current	2312	Right Fog Light High Current Detection Level (Amps)	10	A	0	10	0.1
Right_Fog_Light _Lo_Current	2313	Right Fog Light Low Current Detection Level (Amps)	0.5	A	0	10	0.1
Right_Fog_Light _OC_Current	2314	Right Fog Light Open Circuit Detection Level (Amps)	0.5	A	0	10	0.1

Parameter Definitions:

- **Left_Fog_Light_Hi_Current** - If the current in the left fog light circuit exceeds the level set by this parameter, the Body Controller (BCM) will shut off the circuit and register a fault code.

- **Left_Fog_Light_Lo_Current** - If the current in the left fog light circuit falls below the level set by this parameter, the Body Controller (BCM) will register a fault code.

- **Left_Fog_Light_OC_Current** - This parameter detects open circuit in the left fog light, the Body Controller (BCM) will register a fault code.

- **Right_Fog_Light_Hi_Current** - If the current in the right fog light circuit exceeds the level set by this parameter, the Body Controller (BCM) will shut off the circuit and register a fault code.

- **Right_Fog_Light_Lo_Current** - If the current in the right fog light circuit falls below the level set by this parameter, the Body Controller (BCM) will register a fault code.

- **Right_Fog_Light_OC_Current** - This parameter detects open circuit in the right fog light, the Body Controller (BCM) will register a fault code.

Note/s About Possible Software Feature Conflicts: NONE

Parts Associated with This Feature:

PART NUMBERS	DESCRIPTION
FOG LIGHT CONNECTOR (FEMALE CONNECTOR BODY)	
0587567C91	2-WAY CONNECTOR BODY
1673748C1	WIRE TERMINAL 12-GAUGE
0587577C1	WIRE TERMINAL 14/16-GAUGE
0589391C1	WIRE TERMINAL SEAL 12-GAUGE
1667735C1	WIRE TERMINAL SEAL 14/16-GAUGE
FOG LIGHT CONNECTOR (MALE CONNECTOR BODY)	
0587568C91	2-WAY CONNECTOR BODY (DELPHI WEATHERPACK SEALED 2.6MM FEM 2W 20 AMPS)
1673747C1	WIRE TERMINAL 16-GAUGE (DELPHI WEATHERPACK 2.6MM MALE 12 AWG)
0587575C1	WIRE TERMINAL 16-GAUGE (DELPHI WEATHERPACK 2.6MM MALE 16-14 AWG)
0589391C1	WIRE TERMINAL 12-GUAGE (DELPHI BLUE 1W CAVITY SEAL PN:15324996)
1667735C1	WIRE TERMINAL 16-GUAGE (DELPHI BLUE 1W CAVITY SEAL PN:15324996)

Parts Associated with Fog Light Feature

How to Test This Feature:

1. Activate fog light switch with the IGN key on and the headlamp switch on the low-beam mode.
2. Verify that pin F (labeled Left_Fog_Light) and pin K (labeled Right_Fog_Light) in DLB located in connector
(#1603 J1) are providing battery voltage.
3. Verify that the fog lights are functioning correctly.
4. Turn the fog light switch OFF.
5. Verify that the fog light output goes OFF.

References:
Refer to the applicable International® Circuit Diagrams and Service Manuals.

20. Disable ABS/ATC for Rail Applications

Trucks that are built to run on train rails need to have the ABS/ATC disabled as the front wheels will not be spinning.
Failure to do so will cause a situation where the engine is derated.

20.1. Disabling ABS/ATC by Removing Power to Module

Extended Description:
One method of temporarily disabling the ABS/ATC is to remove power form the ABS module.
This will set a DTC and possible warning lights that can be ignored while the truck is on the rails.
When power is restored to the module, the DTC will go inactive, and the warning lights should go out.

System Block Diagram:

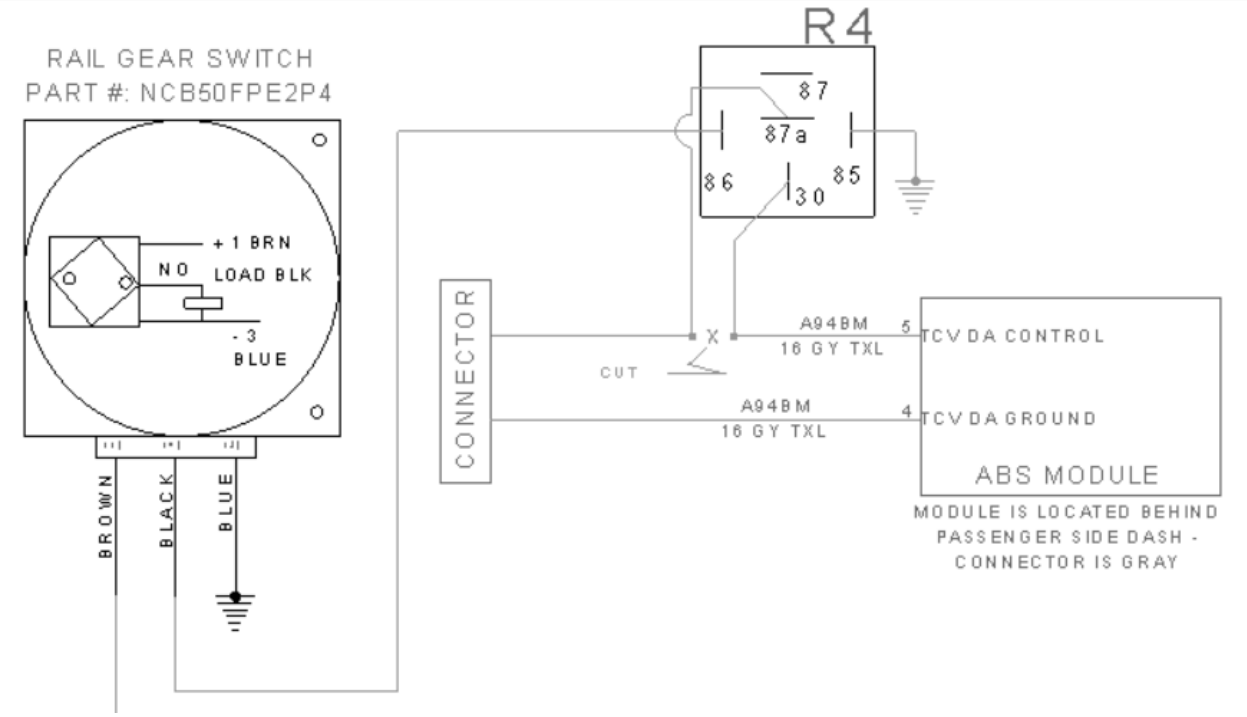

References:
Refer to the applicable International® Circuit Diagrams and Service Manuals

20.2. Disable ABS/ATC with Bendix ABS inputs:

Feature Applicability to Vehicle Platforms:

- Heavy Extreme (HX) 2021 and Newer

Extended Description: This can be configured on trucks that have the Bendix ROM 2 ECU. There is a service option, in the Bendix software, to program a “Railroad mode” to disable traction control.

Enable function in ABS (via ACOM) and wire to input. X1-9. This can be a switch controlled by the driver, a BCM output, a switch from the rail gear, etc.….

System Block Diagram:

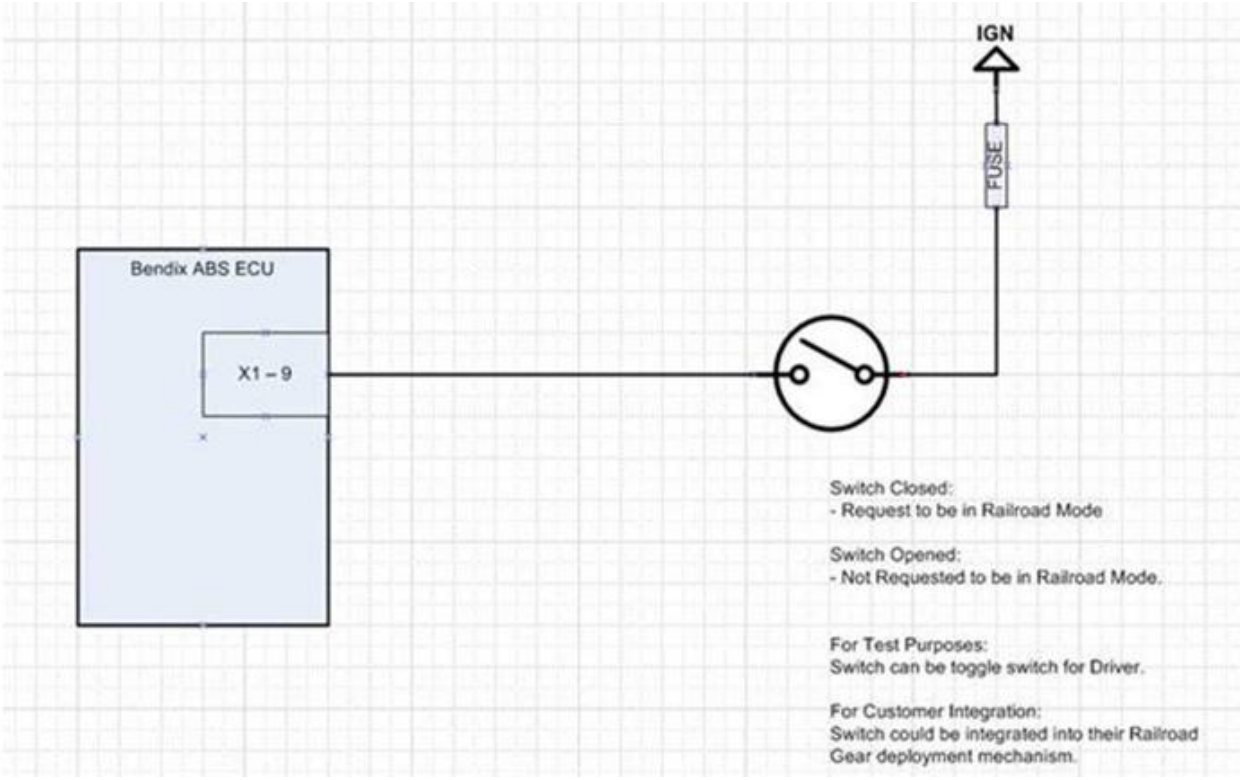

References:

Refer to the applicable International® Circuit Diagrams and Service Manuals

21. Lift Axles

The lift axle controls up to 3 lift axles and are available in two configurations. **Either all controls are located inside cab**, or **controls are split between inside cab and outside cab**. The lift axle controls consist of the following possible controls:

- The axle enable switch, which activates the remaining electrical controls of all lift axles on the vehicle; there is one switch per vehicle.
- The lift axle UP / DOWN switch, which raises and lowers the indicated lift axle; there is a separate switch for each lift axle.
- The lift axle system may use conventional controls and air solenoids or use an Electronic Lift Axle Module (ELAM).
- For the pressure regulator control, there is a separate control for each axle to adjust pressure in load air springs on indicated lift axle.
- For the pressure gauge, there is one gauge per axle for in-cab controls while there are two gauges per axle for mixed controls. These Indicate the pressure in the load air springs on the indicated lift axle.

21.1. Lift Axle Control (Using Conventional Air Solenoid Module):

Feature Applicability to Vehicle Platforms:

- Heavy Vocational (HV)
- Heavy Extreme (HX) 2021 and Newer

Extended Description: These features provide options for activating lift axles with switches in the switch pack or external controls, controlling lift axle pressure with external controls, as well as providing axle pressure indications to the operator with in dash gauges or external gauges.

The in-cab switches communicate with the BCM to control air solenoid outputs.

System Block Diagram:

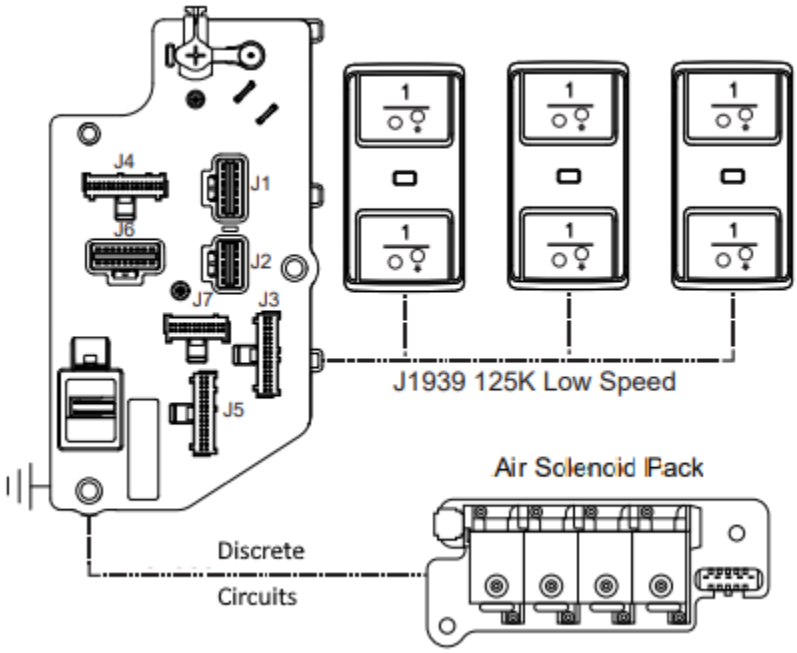

Switch to Air Solenoid Block Diagram

BCM Software Feature Codes:

14RAR
AXLE, LIFT, CONTROLS for One Lift Axle;
Controls Inside and Outside Cab; Includes
Lift/Lower Switch Inside Cab on Dash; Pressure
Gauge and Pressure Regulator Outside Cab

0597466 BCM PROG, LIFT AXLE CONTROL for One Lift Axle; Includes One Lift/Lower MUX Switch Inside Cab on Dash

14RAV
AXLE, LIFT, CONTROLS for Two Lift Axles;
Controls Inside and Outside Cab; Includes
Lift/Lower Switch Inside Cab on Dash; Pressure
Gauge and Pressure Regulator Outside Cab

0597467 BCM PROG, LIFT AXLE CONTROL for Two Lift Axle; Includes Two Lift/Lower MUX Switch Inside Cab on Dash

14RAW
AXLE, LIFT, CONTROLS for Three Lift Axles;
Controls Inside and Outside Cab; Includes
Lift/Lower Switch Inside Cab on Dash; Pressure
Gauge and Pressure Regulator Outside Cab

0597468 BCM PROG, LIFT AXLE CONTROL for Three Lift Axle; Includes Three Lift/Lower MUX Switch Inside Cab on Dash

14RAZ
AXLE, LIFT, CONTROLS for One Lift Axle;
Controls Inside and Outside Cab; Includes
Pressure Gauge and Lift/Lower Switch Inside Cab
on Dash; Pressure Gauge and Pressure Regulator
Outside Cab

0597466 BCM PROG, LIFT AXLE CONTROL for One Lift Axle; Includes One Lift/Lower MUX Switch Inside Cab on Dash

0597398 BCM PROG, LIFT AXLE PRES GAUGE Auxiliary Gauge for (1) Lift Axle

0597401 BCM PROG, LIFT AXLE PRES GAUGE Virtual Gauge for (1) Lift Axle

14RBA
AXLE, LIFT, CONTROLS for Two Lift Axles;
Controls Inside and Outside Cab; Includes
Pressure Gauge and Lift/Lower Switch Inside Cab
on Dash; Pressure Gauge and Pressure Regulator
Outside Cab

0597467 BCM PROG, LIFT AXLE CONTROL for Two Lift Axle, Includes Two Lift/Lower MUX Switch Inside Cab on Dash

0597402 BCM PROG, LIFT AXLE PRES GAUGE Virtual Gauge for (2) Lift Axles

0597399 BCM PROG, LIFT AXLE PRES GAUGE Auxiliary Gauge for (2) Lift Axles

14RBB
AXLE, LIFT, CONTROLS for Three Lift Axles;
Controls Inside and Outside Cab; Includes
Pressure Gauge and Lift/Lower Switch Inside Cab
on Dash; Pressure Gauge and Pressure Regulator
Outside Cab

0597468 BCM PROG, LIFT AXLE CONTROL for Three Lift Axle; Includes Three Lift/Lower MUX Switch Inside Cab on Dash

0597494 BCM PROG, LIFT AXLE PRES GAUGE Auxiliary Gauge for (3) Lift Axles

0597403 BCM PROG, LIFT AXLE PRES GAUGE Virtual Gauge for (3) Lift Axles

Body Controller Software Feature Code Parameters:

Parameter	ID	Description	Default	Units	Min	Max	Step
Prim_Air_Press_Min_WL	3157	Minimum threshold for primary air pressure in-gauge warning light	70	psi	0	150	1
Sec_Air_Press_Min_WL	3159	Minimum threshold for secondary air pressure in-gauge warning light	70	psi	0	150	1
Restore_Previous_Lift_Axle_1_State_On_Startup	3498	When the feature Lift Axle 1 availability is cycled, the feature will try to return to the last • commanded• state if this parameter is set	Off	N/A	N/A	N/A	N/A
Restore_Previous_Lift_Axle_2_State_On_Startup	3499	When the feature Lift Axle 2 availability is cycled, the feature will try to return to the last • commanded• state if this parameter is set	Off	N/A	N/A	N/A	N/A
Restore_Previous_Lift_Axle_3_State_On_Startup	3500	When the feature Lift Axle 3 availability is cycled, the feature will try to return to the last • commanded• state if this parameter is set	Off	N/A	N/A	N/A	N/A

Parameter Definitions:

- Prim_Air_Press_Min_WL - If the primary air pressure falls below the level set by this parameter, the warning indicator in the gauge will illuminate.
- Sec_Air_Press_Min_WL - If the secondary air pressure falls below the level set by this parameter, the warning indicator in the gauge will illuminate.
- Restore_Previous_Lift_Axle_1_State_On_Startup – When this parameter is set and the feature Lift Axle 1 availability is cycled, the feature will try to return to the last commanded state .
- Restore_Previous_Lift_Axle_2_State_On_Startup - When this parameter is set and the feature Lift Axle 2 availability is cycled, the feature will try to return to the last commanded state
- Restore_Previous_Lift_Axle_3_State_On_Startup - When this parameter is set and the feature Lift Axle 3 availability is cycled, the feature will try to return to the last commanded state.

How to Add This Feature:

Adding these features after the vehicle is built is not an easy task. It is encouraged that the vehicle be ordered with the desired feature. The installation requires additional switches, air solenoid modules, air solenoids, circuits to the BCM, fuses and relays be added to the Power Distribution Center (PDC) in the cab. Be sure to label the function of the added relays and fuses to the decal on the underside of the PDC cover. The loose circuits will be numbered and correspond to the circuits outlined in the circuit diagram manual.

Parts Associated with This Feature:

PART NUMBER	DESCRIPTION
MULTIPLEX SWITCH-PACK PARTS	
4057689C4	HOUSING, SWITCH 6-PACK DIN MULTIPLEX
4149251C1	SWITCH, MULTIPLEX, LIFT AXLE 1 UP/DOWN
4149253C1	SWITCH, MULTIPLEX, LIFT AXLE 2 UP/DOWN
4149255C1	SWITCH, MULTIPLEX, LIFT AXLE 3 UP/DOWN
AIR SOLENOID 4-PACK PARTS	
2506711C91	KIT AIR UNIVERSAL SOLENOID (NORMALLY CLOSED)
2505594C1	4-PACK AIR SOLENOID BASE
1661375C2	4-PACK AIR SOLENOID BASE 5-CAVITY CONNECTOR
1661376C1	4-PACK AIR SOLENOID BASE 5-CAVITY CONNECTOR LOCK
2033816C1	4-PACK AIR SOLENOID WIRE TERMINAL 14-GAUGE
2033819C1	4-PACK AIR SOLENOID WIRE TERMINAL 18-GAUGE
0589391C1	4-PACK AIR SOLENOID WIRE TERMINAL SEAL 14-GAUGE
2607909C1	4-PACK AIR SOLENOID WIRE TERMINAL SEAL 18-GAUGE
76-WAY CONNECTOR (THERMAL PROTECTION BARRIER PASS THROUGH)	
3574285C1	76-WAY CONNECTOR WIRE TERMINAL FEMALE 14-GUAGE
3574288C1	76-WAY CONNECTOR WIRE TERMINAL FEMALE 16-GUAGE
2003343C1	76-WAY CONNECTOR WIRE TERMINAL FEMALE 18-GUAGE
3549416C1	76-WAY CONNECTOR WIRE TERMINAL MALE 14-GUAGE
3549417C1	76-WAY CONNECTOR WIRE TERMINAL MALE 16-GUAGE
3549418C1	76-WAY CONNECTOR WIRE TERMINAL MALE 18-GUAGE
BODY CONTROL MODULE J5/J6 CONNECTOR PARTS	
3522073C1	32-WAY BODY CONTROLLER J5 (1601/1602) CONNECTOR WIRE TERMINAL 18/20-GAUGE
3534303C1	32-WAY BODY CONTROLLER J5 (1601/1602) CONNECTOR WIRE TERMINAL 20/22-GAUGE
3544878C1	18-WAY BODY CONTROLLER J6 (1606/2023) CONNECTOR WIRE TERMINAL 12-14-GAUGE [GT280]
3544877C1	18-WAY BODY CONTROLLER J6 (1606/2023) CONNECTOR WIRE TERMINAL 14/16-GAUGE [GT280]

3544876C1	18-WAY BODY CONTROLLER J6 (1606/2023) CONNECTOR WIRE TERMINAL 16/18-GAUGE [GT280]
3544875C1	18-WAY BODY CONTROLLER J6 (1606/2023) CONNECTOR WIRE TERMINAL 18/20-GAUGE [GT280]
3544884C1	18-WAY BODY CONTROLLER J6 (1606/2023) CONNECTOR WIRE TERMINAL 16/18-GAUGE [GT150]
3544883C1	18-WAY BODY CONTROLLER J6 (1606/2023) CONNECTOR WIRE TERMINAL 20/22-GAUGE [GT150]

Parts Associated with Feature

How to Test This Feature:
1. Refer to the operator manual for information on how to activate and control the lift axle(s).
2. Verify that the lift axle(s) work as described,
present.

Note: This feature uses body controller-based software controls which can be diagnosed with Navistar's Diamond Logic® Builder software (see local dealer if not owned).

References:
Refer to the applicable International® Circuit Diagrams and Service Manuals

21.2. Lift Axles (Using ELAM):

Feature Applicability to Vehicle Platforms:
- Heavy Vocational (HV)
- Heavy Extreme (HX) 2021 and Newer

Extended Description: These features provide options for activating lift axles and controlling lift axle pressure with switches in the switch, as well as providing axle pressure indications to the operator with cluster virtual gauges or external gauges.

The in-cab switches control the ELAM air outputs.

The ELAM communicates with the BCM over the body builder data link.

System Block Diagram:

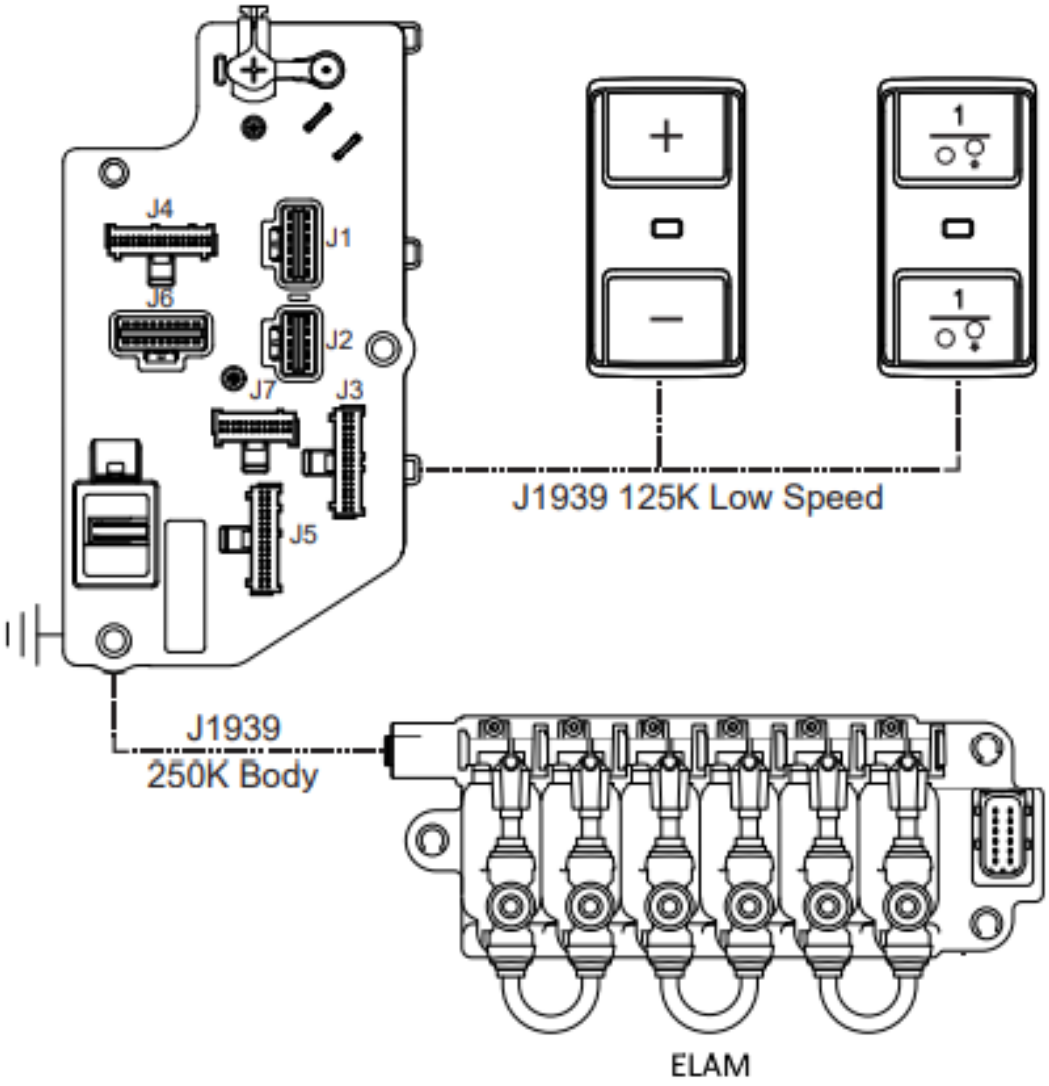

Component Locations:

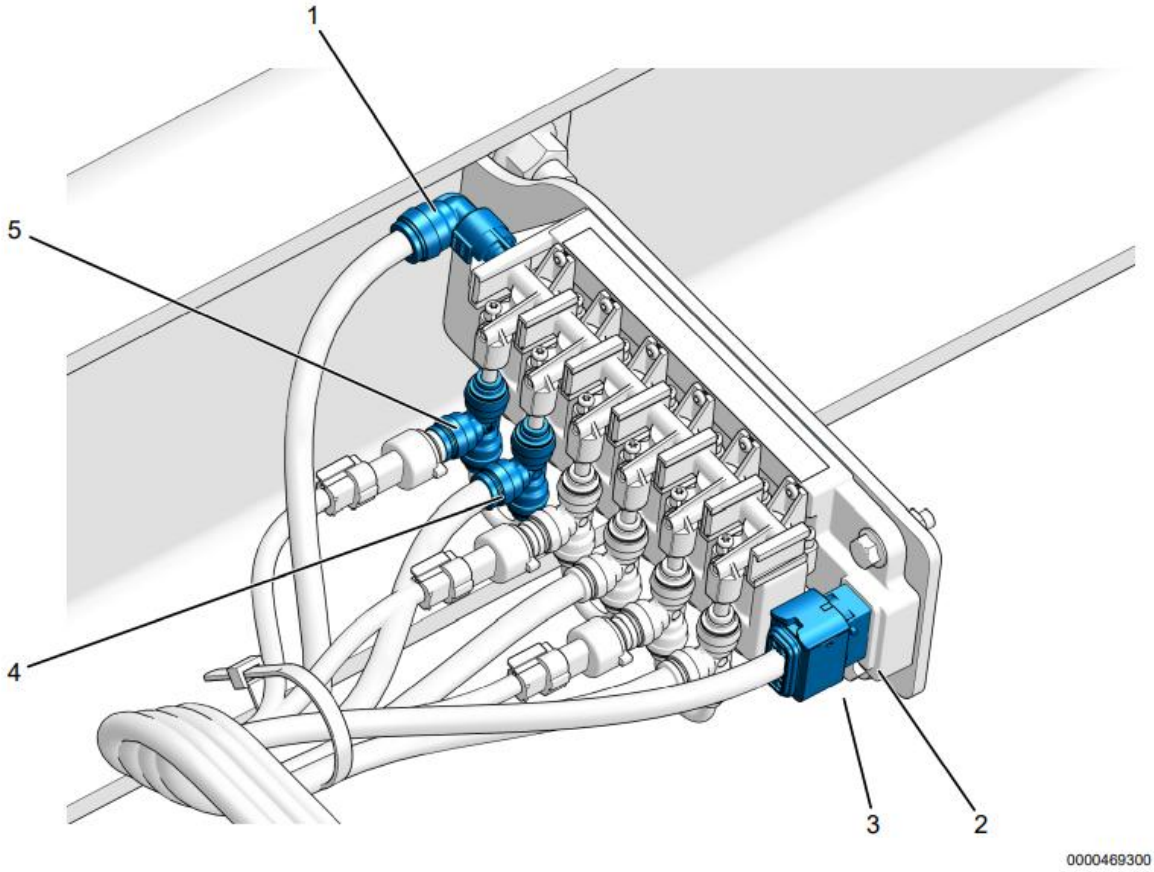

Figure 826 Electronic Lift Axle Control Module (ELACM)

1. Air supply line
2. Valve block connection
3. Electrical connection
4. Load supply air line
5. Load sensor solenoid switch connection

Body Controller Software Feature Codes:

14RBC
AXLE, LIFT, CONTROLS for One Lift Axle; All Controls Inside Cab; Includes Pressure Gauge, Pressure Regulator Switch, Lift/Lower Switch, Inside Cab on Dash

0597469 BCM PROG, LIFT AXLE CONTROL for One Lift Axle, Includes One Lift/Lower & Pressure Regulator MUX Switch and AUX Gauge Inside Cab on Dash
0597398 BCM PROG, LIFT AXLE PRES GAUGE Auxiliary Gauge for (1) Lift Axle

14RBD
AXLE, LIFT, CONTROLS for Two Lift Axles; All Controls Inside Cab; Includes Pressure Gauge, Pressure Regulator Switch, Lift/Lower Switch, Inside Cab on Dash

0597399 BCM PROG, LIFT AXLE PRES GAUGE Auxiliary Gauge for (2) Lift Axles
0597470 BCM PROG, LIFT AXLE CONTROL for Two Lift Axle, Includes Two Lift/Lower & Pressure Regulator MUX Switch and AUX Gauge Inside Cab on Dash

14RBE
AXLE, LIFT, CONTROLS for Three Lift Axles; All Controls Inside Cab; Includes Pressure Gauge, Pressure Regulator Switch, Lift/Lower Switch, Inside Cab on Dash

0597471 BCM PROG, LIFT AXLE CONTROL for Three Lift Axle, Includes Three Lift/Lower & Pressure Regulator MUX Switch and AUX Gauge Inside Cab on Dash
0597494 BCM PROG, LIFT AXLE PRES GAUGE Auxiliary Gauge for (3) Lift Axles Use with pull down pressure input

Body Controller Software Feature Code Parameters:

Parameter	ID	Description	Default	Units	Min	Max	Step
Prim_Air_Press_Min_WL	3157	Minimum threshold for primary air pressure in-gauge warning light	70	psi	0	150	1
Sec_Air_Press_Min_WL	3159	Minimum threshold for secondary air pressure in-gauge warning light	70	psi	0	150	1
Axle_Pressure_Resolution_Value	3534	Increment/Decrement value from Lift Axle Pressure Switch	5	psia	1	5	1
Restore_Lift_Axle_1_Pressure_On_Startup	3537	Parameter for whether or not pressure should be restored to previous value	On	N/A	N/A	N/A	N/A
Restore_Lift_Axle_2_Pressure_On_Startup	3545	Parameter for whether or not pressure should be restored to previous value	On	N/A	N/A	N/A	N/A
Restore_Lift_Axle_3_Pressure_On_Startup	35xx	Parameter for whether or not pressure should be restored to previous value	On	N/A	N/A	N/A	N/A

Parameter Definitions:

- Prim_Air_Press_Min_WL - If the primary air pressure falls below the level set by this parameter, the warning indicator in the gauge will illuminate.

- Sec_Air_Press_Min_WL - If the secondary air pressure falls below the level set by this parameter, the warning indicator in the gauge will illuminate.

- Restore_Previous_Lift_Axle_1_State_On_Startup – When this parameter is set and the feature Lift Axle 1 availability is cycled, the feature will try to return to the last commanded state.

- Restore_Previous_Lift_Axle_2_State_On_Startup - When this parameter is set and the feature Lift Axle 2 availability is cycled, the feature will try to return to the last commanded state

- Restore_Previous_Lift_Axle_3_State_On_Startup - When this parameter is set and the feature Lift Axle 3 availability is cycled, the feature will try to return to the last commanded state.

How to Add This Feature:
Adding these features after the vehicle is built is not an easy task. It is encouraged that the vehicle be ordered with the desired feature. The installation requires additional switches, air solenoid modules, air solenoids, circuits to the BCM, fuses and relays be added to the Power Distribution Center (PDC) in the cab. Be sure to label the function of the added relays and fuses to the decal on the underside of the PDC cover. The loose circuits will be numbered and correspond to the circuits outlined in the circuit diagram manual.

Parts Associated with This Feature:

PART NUMBER	DESCRIPTION
MULTIPLEX SWITCH-PACK PARTS	
4057689C4	HOUSING, SWITCH 6-PACK DIN MULTIPLEX
4149251C1	SWITCH, MULTIPLEX, LIFT AXLE 1 UP/DOWN
4149252C1	SWITCH, MULTIPLEX, LIFT AXLE 1 PRESSURE INCR/DECR
4149253C1	SWITCH, MULTIPLEX, LIFT AXLE 2 UP/DOWN
4149254C1	SWITCH, MULTIPLEX, LIFT AXLE 2 PRESSURE INCR/DECR
4149255C1	SWITCH, MULTIPLEX, LIFT AXLE 3 UP/DOWN
4149256C1	SWITCH, MULTIPLEX, LIFT AXLE 3 PRESSURE INCR/DECR
ELAM PARTS	
2522808C91	SERVICE VALVE, SOLENOID, ELAM, 3 LIFT AXLE
76-WAY CONNECTOR (THERMAL PROTECTION BARRIER PASS THROUGH)	
3574285C1	76-WAY CONNECTOR WIRE TERMINAL FEMALE 14-GUAGE
3574288C1	76-WAY CONNECTOR WIRE TERMINAL FEMALE 16-GUAGE
2003343C1	76-WAY CONNECTOR WIRE TERMINAL FEMALE 18-GUAGE
3549416C1	76-WAY CONNECTOR WIRE TERMINAL MALE 14-GUAGE
3549417C1	76-WAY CONNECTOR WIRE TERMINAL MALE 16-GUAGE

3549418C1	76-WAY CONNECTOR WIRE TERMINAL MALE 18-GUAGE
BODY CONTROL MODULE J5/J6 CONNECTOR PARTS	
3522073C1	32-WAY BODY CONTROLLER J5 (1601/1602) CONNECTOR WIRE TERMINAL 18/20-GAUGE
3534303C1	32-WAY BODY CONTROLLER J5 (1601/1602) CONNECTOR WIRE TERMINAL 20/22-GAUGE
3544878C1	18-WAY BODY CONTROLLER J6 (1606/2023) CONNECTOR WIRE TERMINAL 12-14-GAUGE [GT280]
3544877C1	18-WAY BODY CONTROLLER J6 (1606/2023) CONNECTOR WIRE TERMINAL 14/16-GAUGE [GT280]
3544876C1	18-WAY BODY CONTROLLER J6 (1606/2023) CONNECTOR WIRE TERMINAL 16/18-GAUGE [GT280]
3544875C1	18-WAY BODY CONTROLLER J6 (1606/2023) CONNECTOR WIRE TERMINAL 18/20-GAUGE [GT280]
3544884C1	18-WAY BODY CONTROLLER J6 (1606/2023) CONNECTOR WIRE TERMINAL 16/18-GAUGE [GT150]
3544883C1	18-WAY BODY CONTROLLER J6 (1606/2023) CONNECTOR WIRE TERMINAL 20/22-GAUGE [GT150]

Parts Associated with Feature

How to Test This Feature:

1. Refer to the operator manual for information on how to activate and control the lift axle(s).
2. Verify that the lift axle(s) work as described,
present.

Note: This feature uses body controller-based software controls which can be diagnosed with Navistar's Diamond Logic® Builder software (see local dealer if not owned).

References:
Refer to the applicable International® Circuit Diagrams and Service Manuals

21.3. Lift Axle Electronic Gauges:

16ACE VIRTUAL GAUGE, LIFT AXLE PRESS for Lift
Axles, Requires Premium Cluster, Replaces Auxiliary Lift Axle Pressure Gauge on Dash When Ordered

14RAZ
AXLE, LIFT, CONTROLS for One Lift Axle; Controls Inside and Outside Cab; Includes Pressure Gauge and Lift/Lower Switch Inside Cab on Dash; Pressure Gauge and Pressure Regulator Outside Cab

14RBA
AXLE, LIFT, CONTROLS for Two Lift Axles; Controls Inside and Outside Cab; Includes Pressure Gauge and Lift/Lower Switch Inside Cab on Dash; Pressure Gauge and Pressure Regulator Outside Cab

14RBB
AXLE, LIFT, CONTROLS for Three Lift Axles; Controls Inside and Outside Cab; Includes Pressure Gauge and Lift/Lower Switch Inside Cab on Dash; Pressure Gauge and Pressure Regulator Outside Cab

Feature Applicability to Vehicle Platforms:

- Heavy Extreme (HX) 2021 and Newer

Extended Description:

The in-cab gauges and virtual gauges are controlled by discrete pressure signal inputs to the body control module. The BCM sends this information to the cluster. The cluster will display the information in the center display, for a virtual gauge, or send the information to the cluster which drives auxiliary gauges on dedicated circuits. The dedicated circuits are daisy chained from one auxiliary gauge to the next.

System Block Diagram:

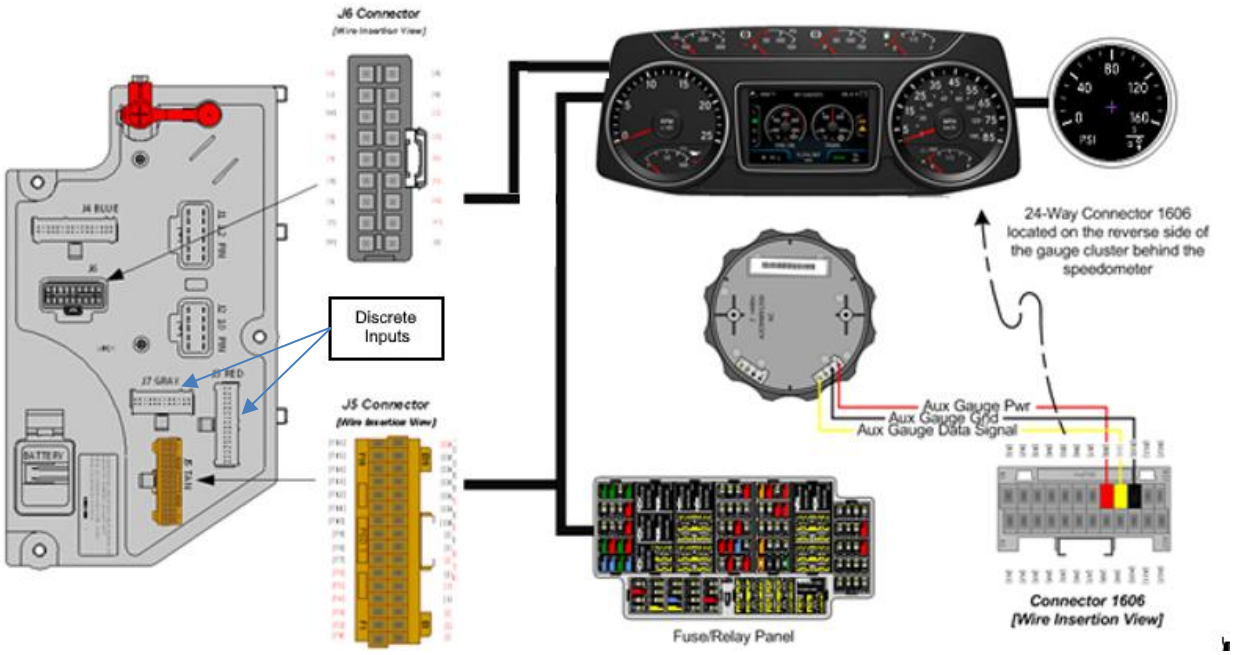

Discrete Input to Aux Gauge Block Diagram

Body Controller Software Feature Codes:

- 0597398 BCM PROG, LIFT AXLE PRES GAUGE Auxiliary Gauge for (1) Lift Axle
- 0597399 BCM PROG, LIFT AXLE PRES GAUGE Auxiliary Gauge for (2) Lift Axles
- 0597400 BCM PROG, LIFT AXLE PRES GAUGE Auxiliary Gauge for (3) Lift Axles
- 0597401 BCM PROG, LIFT AXLE PRES GAUGE Virtual Gauge for (1) Lift Axle
- 0597402 BCM PROG, LIFT AXLE PRES GAUGE Virtual Gauge for (2) Lift Axles
- 0597403 BCM PROG, LIFT AXLE PRES GAUGE Virtual Gauge for (3) Lift Axles
- 0597494 BCM PROG, LIFT AXLE PRES GAUGE Auxiliary Gauge for (3) Lift Axles Use with pull down pressure input
- 0597495 BCM PROG, LIFT AXLE PRES GAUGE Virtual Gauge for (3) Lift Axles Use with pull down pressure input
- 0597466 BCM PROG, LIFT AXLE CONTROL for One Lift Axle; Includes One Lift/Lower MUX Switch Inside Cab on Dash
- 0597467 BCM PROG, LIFT AXLE CONTROL for Two Lift Axle; Includes Two Lift/Lower MUX Switch Inside Cab on Dash
- 0597468 BCM PROG, LIFT AXLE CONTROL for Three Lift Axle; Includes Three Lift/Lower MUX Switch Inside Cab on Dash

How to Add This Feature:

Note: When adding an auxiliary gauge to a vehicle it will be the responsibly of the installer to cut a 2-inch circular hole in the upper right-hand region of the flat center panel area of the instrument panel to accommodate the additional gauge. If the gauge is

the first to be added in this area, it will be necessary to install an initial 3-wire interface harness extending from the back of the main gauge cluster to one of the two connectors on the back of the auxiliary gauge. All subsequent auxiliary gauges can be “daisy chained” from one gauge to the next. The upper right-hand region of the flat center panel area of the instrument panel can accommodate up to five auxiliary gauges.

Parts Associated with This Feature:

PART NUMBER	DESCRIPTION	BEZEL	UNITS
AUXILIARY GAUGES			
4061129C2	**GAUGE, ELECTRONIC, LIFT AXLE 1**	BLACK	ENG
4061130C2	GAUGE, ELECTRONIC, LIFT AXLE 1-MET ENG BLACK	BLACK	MET
4061131C2	GAUGE, ELECTRONIC, LIFT AXLE 2- ENG BLACK	BLACK	ENG
4061132C2	GAUGE, ELECTRONIC, LIFT AXLE 2-MET BLACK	BLACK	MET
4120547C1	GAUGE, ELECTRONIC, LIFT AXLE 3-ENG BLACK		ENG
4083971C1	GAUGE MOUNTING NUT		
GAUGE CLUSTER 24-WAY CONNECTOR PARTS			
3710061C1	GAUGE CLUSTER 24-WAY J7 CONNECTOR	N/A	N/A
3539892C1	LOCK #1 24-WAY J7 CONNECTOR	N/A	N/A
3539893C1	LOCK #2 24-WAY J7 CONNECTOR	N/A	N/A
3522073C1	WIRE TERMINAL J7 18-20 GAUGE	N/A	N/A
3534303C1	WIRE TERMINAL J7 20-22 GAUGE	N/A	N/A
AUXILIARY GAUGE-TO-GAUGE JUMPER HARNESS PARTS			
4063415C1	AUXILIARY GAUGE 4-WAY CONNECTOR	N/A	N/A
4062808C1	WIRE TERMINAL 18-20 GAUGE	N/A	N/A
4066723C91	GAUGE-TO-GAUGE JUMPER HARNESS	N/A	N/A

Parts Associated with Lift Axle Gauge Features

How to Test This Feature:
This feature is added by programming the Body Control Module (BCM) using the Navistar Diamond Logic Builder software.

Note: This feature uses body controller-based software controls which can be diagnosed with Navistar’s Diamond Logic® Builder software (see local dealer if not owned).

References:
Refer to the applicable International® Circuit Diagrams and Service Manuals

22. Gauges and Fault Display

22.1. 16HGG: GAUGE, OIL TEMP, ENGINE

Feature Applicability to Vehicle Platforms:

- Line Haul Transport (LT)
- Regional Haul (RH)
- Heavy Extreme (HX) 2021 and Newer

Extended Description: This feature provides an auxiliary gauge in the gauge cluster that displays engine oil temperature to the vehicle operator.

System Block Diagram:

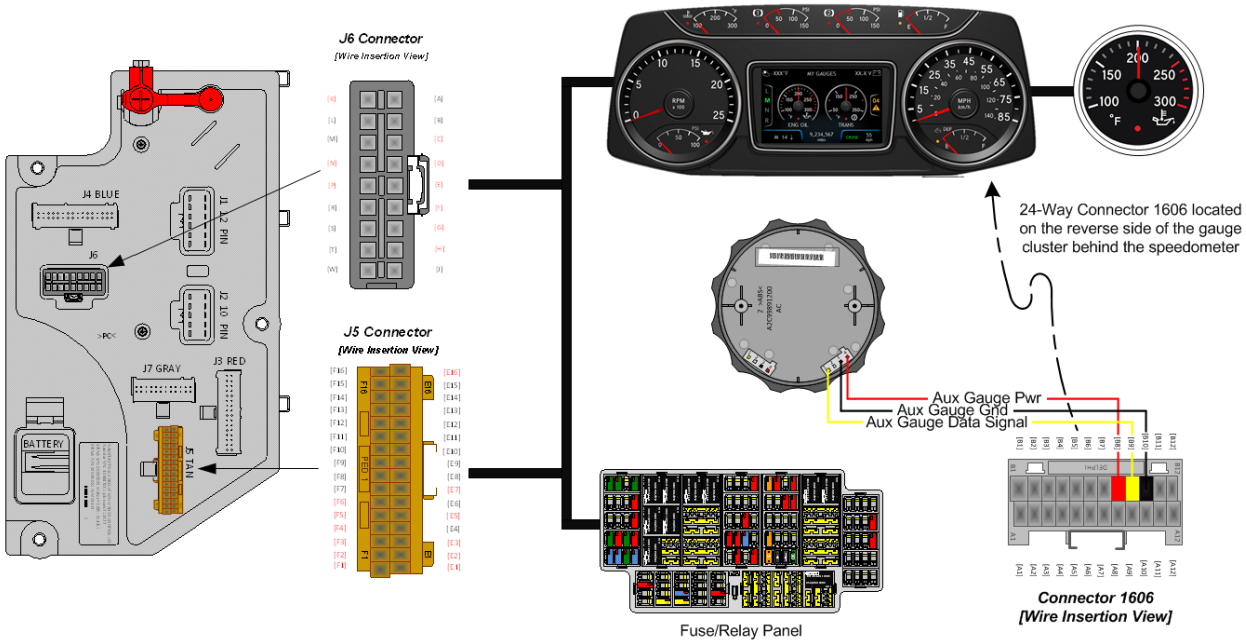

Body Controller Software Feature Codes:

- 597121 - BCM PROG, ENGINE OIL TEMP ECM; AUX GA

Body Controller Software Feature Code Parameters:

Parameter	ID	Description	Default	Units	Min	Max	Step
Eng_Oil_Temp_Filter_Param	219	Engine oil temperature gauge update rate. A value of 1 is the slowest and 255 is the fastest update rate.	255	No Units	1	255	1
Eng_Oil_Temp_Max_WL	2274	Maximum set point for engine oil temperature in-gauge warning light	251	F	100	300	0.03125
Eng_Oil_Temp_Min_WL	2291	Minimum set point for engine oil temperature in-gauge warning light. The default of 3226	3226	F	100	300	0.03125

		means no minimum warning light.					
Eng_Oil_Temp_Alrm _Ty_Param	2354	Engine oil temperature gauge alarm type.	4	List	0	7	1

Parameter Definitions:

- **Eng_Oil_Temp_Filter_Param** – This parameter sets the engine oil temperature update rate. The higher the number is, the faster the update rate. 255 is the fastest update rate available, and 1 is the slowest update rate available
- **Eng_Oil_Temp_Max_WL** - This parameter sets the maximum point for engine oil temperature in-gauge warning light. When the oil temperature rises above this set parameter, the warning light in the gauge will illuminate.
- **Eng_Oil_Temp_Min_WL** - This parameter sets the minimum point for engine oil temperature in-gauge warning light. When the oil temperature falls below this set parameter, the warning light in the gauge will illuminate
- **Eng_Oil_Temp_Alrm_Ty_Param** – This parameter defines the number of beeps associated with the engine oil temperature alarm.

How to Add This Feature:

Note: When adding an auxiliary gauge to a vehicle it will be the responsibly of the installer to cut a 2-inch circular hole in the upper right-hand region of the flat center panel area of the instrument panel to accommodate the additional gauge. If the gauge is the first to be added in this area, it will be necessary to install an initial 3-wire interface harness extending from the back of the main gauge cluster to one of the two connectors on the back of the auxiliary gauge. All subsequent auxiliary gauges can be “daisy chained” from one gauge to the next. The upper right-hand region of the flat center panel area of the instrument panel can accommodate up to five auxiliary gauges.

Parts Associated with This Feature:

PART NUMBER	DESCRIPTION	BEZEL	UNITS
AUXILIARY GAUGES			
4061137C1	ENGINE OIL TEMPERATURE GAUGE	BLACK	ENG
4061138C1	ENGINE OIL TEMPERATURE GAUGE	BLACK	MET
3768422C1	ENGINE OIL TEMPERATURE GAUGE	CHROME	ENG
3768423C1	ENGINE OIL TEMPERATURE GAUGE	CHROME	MET
GAUGE CLUSTER 24-WAY CONNECTOR PARTS			
3710061C1	GAUGE CLUSTER 24-WAY J7 CONNECTOR	N/A	N/A
3539892C1	LOCK #1 24-WAY J7 CONNECTOR	N/A	N/A
3539893C1	LOCK #2 24-WAY J7 CONNECTOR	N/A	N/A
3522073C1	WIRE TERMINAL J7 18-20 GAUGE	N/A	N/A
3534303C1	WIRE TERMINAL J7 20-22 GAUGE	N/A	N/A
AUXILIARY GAUGE-TO-GAUGE JUMPER HARNESS PARTS			
4063415C1	AUXILIARY GAUGE 4-WAY CONNECTOR	N/A	N/A
4062808C1	WIRE TERMINAL 18-20 GAUGE	N/A	N/A
4066723C91	GAUGE-TO-GAUGE JUMPER HARNESS	N/A	N/A

Parts Associated with Engine Oil Temp Feature

How to Test This Feature:
This feature is added by programming the Body Control Module (BCM) using the Navistar Diamond Logic Builder software.

Note: This feature uses body controller-based software controls which can be diagnosed with Navistar's Diamond Logic® Builder software (see local dealer if not owned).

References:
Refer to the applicable International® Circuit Diagrams and Service Manuals

22.2. 16HGH: OIL TEMP GAUGE FOR AUTOMATIC TRANS

Feature Applicability to Vehicle Platforms:

- Line Haul Transport (LT)
- Regional Haul (RH)
- Heavy Extreme (HX) 2021 and Newer

Extended Description: This feature provides an auxiliary gauge in the gauge cluster that displays the oil temperature of the automatic transmission to the vehicle operator.

System Block Diagram:

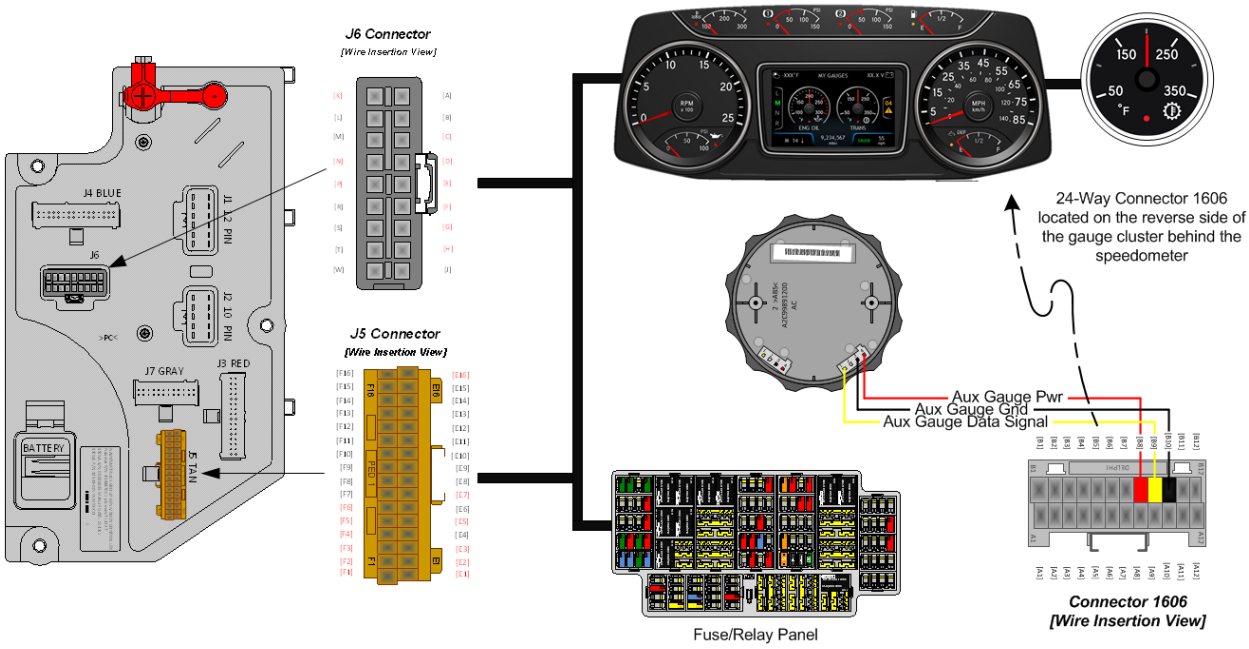

Body Controller Software Feature Codes:

- 597125 - BCM PROG, **TRANS OIL TEMP TCM; AUX GA**

Body Controller Software Feature Code Parameters:

Parameter	ID	Description	Default	Units	Min	Max	Step
Trans_Oil_Temp_Filter_Param	589	Transmission oil temperature gauge update rate. A value of 1 is the slowest and 255 is the fastest update rate.	255	No Units	1	255	1
Trans_Oil_Temp_Max_WL	2272	Maximum set point for transmission oil temperature in-gauge warning light	251	F	100	300	0.03125
Trans_Oil_Temp_Min_WL	2273	Minimum set point for transmission oil temperature in-gauge warning light. The	3226	F	100	300	0.03125

		default of 3226 means no minimum warning light.					
Trans_Oil_Temp_Alrm_Ty_Param	2356	Transmission oil temperature gauge alarm type.	4	List	0	7	1

Parameter Definitions:

- **Trans_Oil_Temp_Filter_Param** – This parameter sets the transmission oil temperature update rate. The higher the number is, the faster the update rate. 255 is the fastest update rate available, and 1 is the slowest update rate available
- **Trans_Oil_Temp_Max_WL** - This parameter sets the maximum point for transmission oil temperature in-gauge warning light. When the oil temperature rises above this set parameter, the warning light in the gauge will illuminate.
- **Trans_Oil_Temp_Min_WL** - This parameter sets the minimum point for transmission oil temperature in-gauge warning light. When the oil temperature falls below this set parameter, the warning light in the gauge will illuminate
- **Trans_Oil_Temp_Alrm_Ty_Param** – This parameter defines the number of beeps associated with the transmission oil temperature alarm.

How to Add This Feature:

Note: When adding an auxiliary gauge to a vehicle it will be the responsibly of the installer to cut a 2-inch circular hole in the upper right-hand region of the flat center panel area of the instrument panel to accommodate the additional gauge. If the gauge is the first to be added in this area, it will be necessary to install an initial 3-wire interface harness extending from the back of the main gauge cluster to one of the two connectors on the back of the auxiliary gauge. All subsequent auxiliary gauges can be “daisy chained” from one gauge to the next. The upper right-hand region of the flat center panel area of the instrument panel can accommodate up to five auxiliary gauges.

Parts Associated with This Feature:

PART NUMBER	DESCRIPTION	BEZEL	UNITS
AUXILIARY GAUGES			
4061135C1	AUTO TRANS OIL TEMPERATURE GAUGE	BLACK	ENGLISH
4061136C1	AUTO TRANS OIL TEMPERATURE GAUGE	BLACK	METRIC
3768420C1	AUTO TRANS OIL TEMPERATURE GAUGE	CHROME	ENGLISH
3768421C1	AUTO TRANS OIL TEMPERATURE GAUGE	CHROME	METRIC
GAUGE CLUSTER 24-WAY CONNECTOR PARTS			
3710061C1	GAUGE CLUSTER 24-WAY J7 CONNECTOR	N/A	N/A
3539892C1	LOCK #1 24-WAY J7 CONNECTOR	N/A	N/A
3539893C1	LOCK #2 24-WAY J7 CONNECTOR	N/A	N/A
3522073C1	WIRE TERMINAL J7 18-20 GAUGE	N/A	N/A
3534303C1	WIRE TERMINAL J7 20-22 GAUGE	N/A	N/A
AUXILIARY GAUGE-TO-GAUGE JUMPER HARNESS PARTS			
4063415C1	AUXILIARY GAUGE 4-WAY CONNECTOR	N/A	N/A
4062808C1	WIRE TERMINAL 18-20 GAUGE	N/A	N/A
4066723C91	GAUGE-TO-GAUGE JUMPER HARNESS	N/A	N/A

Parts Associated with Auto Trans Oil Temp Feature

How to Test This Feature:
This feature is added by programming the Body Control Module (BCM) using the Navistar Diamond Logic Builder software.

Note: This feature uses body controller-based software controls which can be diagnosed with Navistar's Diamond Logic® Builder software (see local dealer if not owned).

References:
Refer to the applicable International® Circuit Diagrams and Service Manuals

22.3. 16HGJ: GAUGE, OIL TEMP, MANUAL TRANSMISSION

Feature Applicability to Vehicle Platforms:

- Line Haul Transport (LT)
- Regional Haul (RH)
- Heavy Extreme (HX) 2021 and Newer

Extended Description: This feature provides an auxiliary gauge in the gauge cluster that displays the oil temperature of the manual transmission to the vehicle operator.

System Block Diagram:

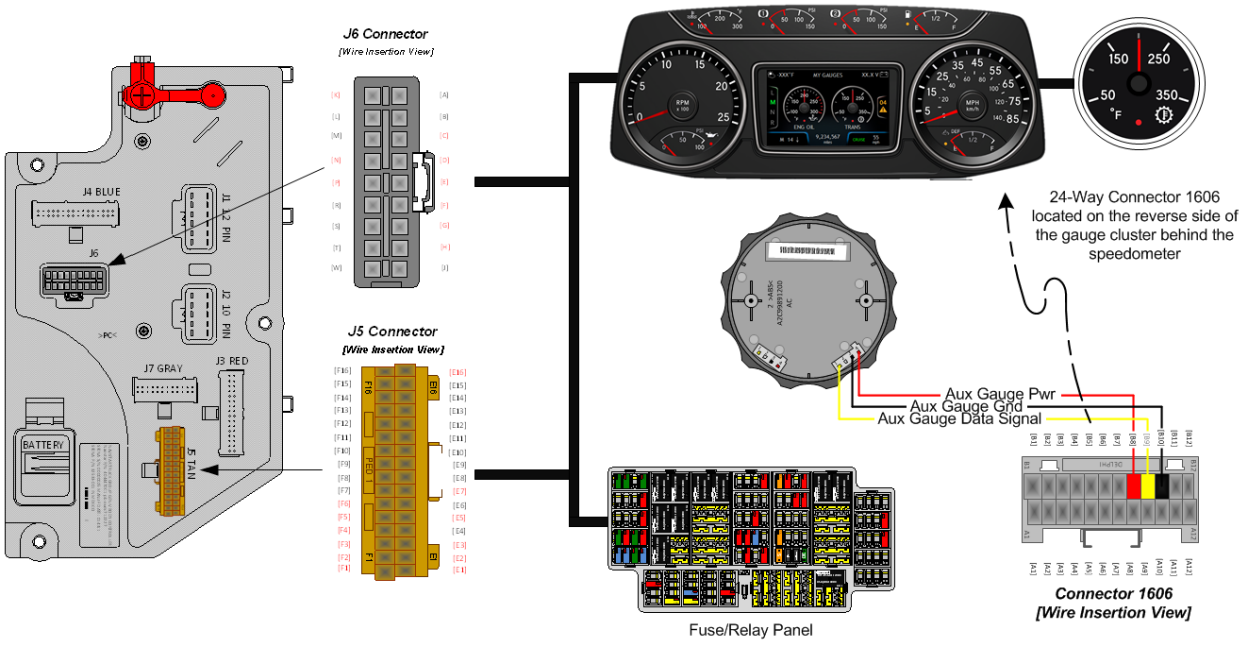

Body Controller Software Feature Codes:

- 597123 - BCM PROG, **TEMP GAUGE OIL MANUAL TRANS**

Body Controller Software Feature Code Parameters:

Parameter	ID	Description	Default	Units	Min	Max	Step
Trans_Oil_Temp_Filter_Param	589	Transmission oil temperature gauge update rate. A value of 1 is the slowest and 255 is the fastest update rate.	255	No Units	1	255	1
Trans_Oil_Temp_Max_WL	2272	Maximum set point for transmission oil temperature in-gauge warning light	251	F	100	300	0.03125
Trans_Oil_Temp_Min_WL	2273	Minimum set point for transmission oil temperature in-gauge warning light. The default of 3226 means no minimum warning light.	3226	F	100	300	0.03125

Trans_Oil_Temp_Alrm_Ty_Param	2356	Transmission oil temperature gauge alarm type.	4	List	0	7	1

Parameter Definitions:

- **Trans_Oil_Temp_Filter_Param** – This parameter sets the transmission oil temperature update rate. The higher the number is, the faster the update rate. 255 is the fastest update rate available, and 1 is the slowest update rate available
- **Trans_Oil_Temp_Max_WL** - This parameter sets the maximum point for transmission oil temperature in-gauge warning light. When the oil temperature rises above this set parameter, the warning light in the gauge will illuminate.
- **Trans_Oil_Temp_Min_WL** - This parameter sets the minimum point for transmission oil temperature in-gauge warning light. When the oil temperature falls below this set parameter, the warning light in the gauge will illuminate
- **Trans_Oil_Temp_Alrm_Ty_Param** – This parameter defines the number of beeps associated with the transmission oil temperature alarm.

How to Add This Feature:

Note: When adding an auxiliary gauge to a vehicle it will be the responsibly of the installer to cut a 2-inch circular hole in the upper right-hand region of the flat center panel area of the instrument panel to accommodate the additional gauge. If the gauge is the first to be added in this area, it will be necessary to install an initial 3-wire interface harness extending from the back of the main gauge cluster to one of the two connectors on the back of the auxiliary gauge. All subsequent auxiliary gauges can be “daisy chained” from one gauge to the next. The upper right-hand region of the flat center panel area of the instrument panel can accommodate up to five auxiliary gauges.

Parts Associated with This Feature:

PART NUMBER	DESCRIPTION	BEZEL	UNITS
AUXILIARY GAUGES			
4061135C1	MANUAL TRANS OIL TEMPERATURE GAUGE	BLACK	ENGLISH
4061136C1	MANUAL TRANS OIL TEMPERATURE GAUGE	BLACK	METRIC
3768420C1	MANUAL TRANS OIL TEMPERATURE GAUGE	CHROME	ENGLISH
3768421C1	MANUAL TRANS OIL TEMPERATURE GAUGE	CHROME	METRIC
GAUGE CLUSTER 24-WAY CONNECTOR PARTS			
3710061C1	GAUGE CLUSTER 24-WAY J7 CONNECTOR	N/A	N/A
3539892C1	LOCK #1 24-WAY J7 CONNECTOR	N/A	N/A
3539893C1	LOCK #2 24-WAY J7 CONNECTOR	N/A	N/A
3522073C1	WIRE TERMINAL J7 18-20 GAUGE	N/A	N/A
3534303C1	WIRE TERMINAL J7 20-22 GAUGE	N/A	N/A
AUXILIARY GAUGE-TO-GAUGE JUMPER HARNESS PARTS			
4063415C1	AUXILIARY GAUGE 4-WAY CONNECTOR	N/A	N/A
4062808C1	WIRE TERMINAL 18-20 GAUGE	N/A	N/A
4066723C91	GAUGE-TO-GAUGE JUMPER HARNESS	N/A	N/A

Parts Associated with Trans Oil Temp Gauge Feature

How to Test This Feature:
This feature is added by programming the Body Control Module (BCM) using the Navistar Diamond Logic Builder software.

Note: This feature uses body controller-based software controls which can be diagnosed with Navistar's Diamond Logic® Builder software (see local dealer if not owned).

References:
Refer to the applicable International® Circuit Diagrams and Service Manuals

22.4. 16HGL: GAUGE, OIL TEMP, REAR AXLE

Feature Applicability to Vehicle Platforms:

- Line Haul Transport (LT)
- Regional Haul (RH)
- Heavy Extreme (HX) 2021 and Newer)

Extended Description: Provides rear axle operating information to the vehicle operator. Rear axle temperature should not exceed 240°F (115 °C).

System Block Diagram:

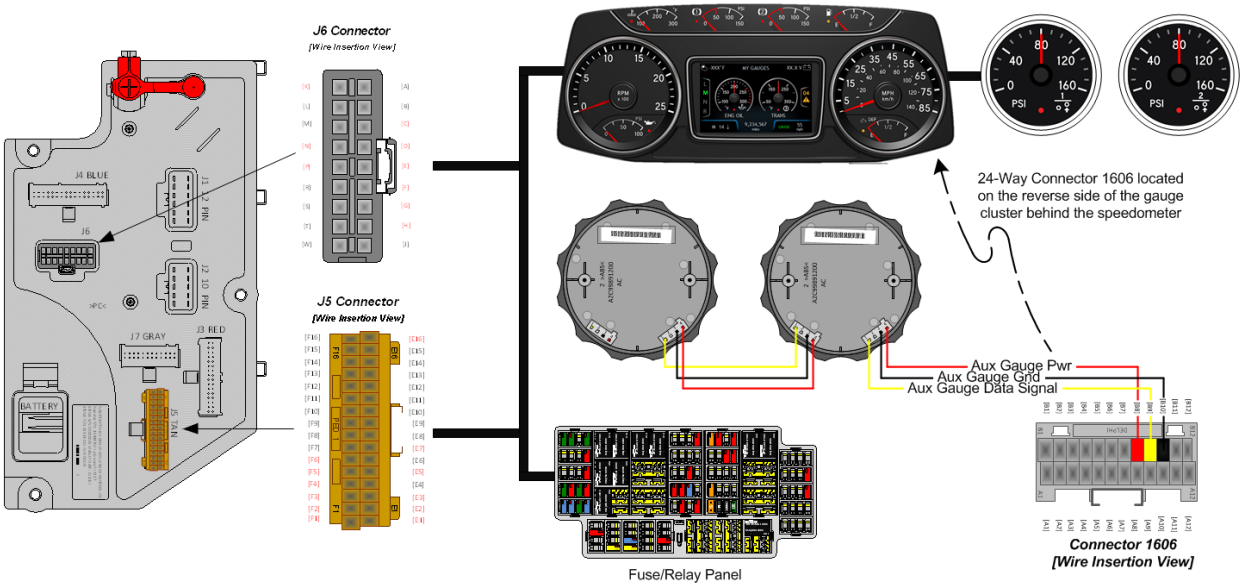

Body Controller Software Feature Codes:

- 597115 BCM PROG, AXLE TEMP FOR SGL AUX GA
- 597117 BCM PROG, AXLE TEMP FOR DUAL AUX GA

Body Controller Software Feature Code Parameters:

Parameter for Feature 597115							
Parameter	**ID**	**Description**	**Default**	**Units**	**Min**	**Max**	**Step**
Rear_RR_Axle_Temp _Filter_Param	519	Rear-rear axle temperature gauge update rate. A value of 1 is the slowest and 255 is the fastest update rate.	255	No Units	1	255	1
Rear_RR_Axle_Temp _Max_WL	2296	Maximum set point for rear-rear axle temperature in-gauge warning light	240.8	F	100	300	1
Rear_RR_Axle _Temp_Min_WL	2303	Minimum set point for rear-rear axle temperature in-gauge warning light. A value of 117923 means no minimum warning light.	117920	F	100	300	1

Rear_RR_Axle _Temp_Alrm_Ty_Par am	2365	Rear-rear axle temperature gauge alarm type.	4	List	0	7	1

Parameter for Feature 597117							
Parameter	**ID**	**Description**	**Default**	**Units**	**Min**	**Max**	**Step**
Rear_RR_Axle_Temp _Filter_Param	519	Rear-rear axle temperature gauge update rate. A value of 1 is the slowest and 255 is the fastest update rate.	255	No Units	1	255	1
Rear_RR_Axle_Temp _Max_WL	2296	Maximum set point for rear-rear axle temperature in-gauge warning light	240.8	F	100	300	1
Rear_RR_Axle _Temp_Min_WL	2303	Minimum set point for rear-rear axle temperature in-gauge warning light. A value of 117920 means no minimum warning light.	117920	F	100	300	1
Rear_RR_Axle _Temp_Alrm_Ty_Par am	2365	Rear-rear axle temperature gauge alarm type.	4	List	0	7	1
FWD_RR_Axle_Tem p_Filter_Param	277	FWD-rear axle temperature gauge update rate. A value of 1 is the slowest and 255 is the fastest update rate.	255	No Units	1	255	1
FWD_RR_Axle_Tem p_Max_WL	2294	Maximum set point for FWD-rear axle temperature in-gauge warning light	240.8	F	100	300	1
FWD_RR_Axle _Temp_Min_WL	2295	Minimum set point for FWD-rear axle temperature in-gauge warning light. A value of 117920 means no minimum warning light.	117920	F	100	300	1
FWD_RR_Axle _Temp_Alrm_Ty_Par am	2364	FWD-rear axle temperature gauge alarm type.	4	List	0	7	1

Parameter Definitions:

- **Rear_RR_Axle_Temp_Filter_Param** – This parameter sets the rear-rear axle temperature update rate. The higher the number is, the faster the update rate. 255 is the fastest update rate available, and 1 is the slowest update rate available
- **Rear_RR_Axle_Temp_Max_WL** - This parameter sets the maximum point for rear-rear axle temperature in-gauge warning light. When the rear-rear axle temperature rises above this set parameter, the warning light in the gauge will illuminate.
- **Rear_RR_Axle_Temp_Min_WL** - This parameter sets the minimum point for rear-rear axle temperature in-gauge warning light. When the rear-rear axle

temperature falls below this set parameter, the warning light in the gauge will illuminate. A value of 117920 means no minimum warning light

- **Rear_RR_Axle_Temp_Alrm_Ty_Param** – This parameter defines the number of beeps associated with the rear-rear axle temperature alarm.
- **FWD_RR_Axle_Temp_Filter_Param** – This parameter sets the forward-rear axle temperature update rate. The higher the number is, the faster the update rate. 255 is the fastest update rate available, and 1 is the slowest update rate available
- **FWD_RR_Axle_Temp_Max_WL** - This parameter sets the maximum point for forward-rear axle temperature in-gauge warning light. When the forward-rear axle temperature rises above this set parameter, the warning light in the gauge will illuminate.
- **FWD_RR_Axle_Temp_Min_WL** - This parameter sets the minimum point for forward-rear axle temperature in-gauge warning light. When the forward-rear axle temperature falls below this set parameter, the warning light in the gauge will illuminate. A value of 117920 means no minimum warning light
- **FWD_RR_Axle_Temp_Alrm_Ty_Param** – This parameter defines the number of beeps associated with the forward-rear axle temperature alarm.

Note/s About Possible Software Feature Conflicts:

- Only one axle temperature software feature code may be used on a given vehicle as the two features are mutually exclusive.

How to Add This Feature:

Note: When adding an auxiliary gauge to a vehicle it will be the responsibly of the installer to cut a 2-inch circular hole in the upper right-hand region of the flat center panel area of the instrument panel to accommodate the additional gauge. If the gauge is the first to be added in this area, it will be necessary to install an initial 3-wire interface harness extending from the back of the main gauge cluster to one of the two connectors on the back of the auxiliary gauge. All subsequent auxiliary gauges can be “daisy chained” from one gauge to the next. The upper right-hand region of the flat center panel area of the instrument panel can accommodate up to five auxiliary gauges.

Parts Associated with This Feature:

PART NUMBER	DESCRIPTION	BEZEL	UNITS
AUXILIARY GAUGES			
4061119C1	FRONT, REAR AXLE OIL TEMP GAUGE	BLACK	ENGLISH
406111C20	FRONT, REAR AXLE OIL TEMP GAUGE	BLACK	METRIC
3768408C1	FRONT, REAR AXLE OIL TEMP GAUGE	CHROME	ENGLISH
376840C19	FRONT, REAR AXLE OIL TEMP GAUGE	CHROME	METRIC
4061117C1	REAR. REAR AXLE OIL TEMP GAUGE	BLACK	ENGLISH
4061118C1	REAR. REAR AXLE OIL TEMP GAUGE	BLACK	METRIC
3768406C1	REAR. REAR AXLE OIL TEMP GAUGE	CHROME	ENGLISH
3768407C1	REAR. REAR AXLE OIL TEMP GAUGE	CHROME	METRIC
GAUGE CLUSTER 24-WAY CONNECTOR PARTS			
3710061C1	GAUGE CLUSTER 24-WAY J7 CONNECTOR	N/A	N/A
3539892C1	LOCK #1 24-WAY J7 CONNECTOR	N/A	N/A
3539893C1	LOCK #2 24-WAY J7 CONNECTOR	N/A	N/A
3522073C1	WIRE TERMINAL J7 18-20 GAUGE	N/A	N/A
3534303C1	WIRE TERMINAL J7 20-22 GAUGE	N/A	N/A
AUXILIARY GAUGE-TO-GAUGE JUMPER HARNESS PARTS			
4063415C1	AUXILIARY GAUGE 4-WAY CONNECTOR	N/A	N/A
4062808C1	WIRE TERMINAL 18-20 GAUGE	N/A	N/A
4066723C91	GAUGE-TO-GAUGE JUMPER HARNESS	N/A	N/A

Parts Associated with Front & Rear Axle Oil Temp Feature

How to Test This Feature:
This feature is added by programming the Body Control Module (BCM) using the Navistar Diamond Logic Builder software.

Note: This feature uses body controller-based software controls which can be diagnosed with Navistar's Diamond Logic® Builder software (see local dealer if not owned).

References:
Refer to the applicable International® Circuit Diagrams and Service Manuals

22.5. 16HGN: GAUGE, AIR APPLICATION

Feature Applicability to Vehicle Platforms:

- Line Haul Transport (LT)
- Regional Haul (RH)
- Heavy Extreme (HX) 2021 and Newer

Extended Description: This feature provides a gauge that displays the amount of pressure being applied to the brake pedal.

System Block Diagram:

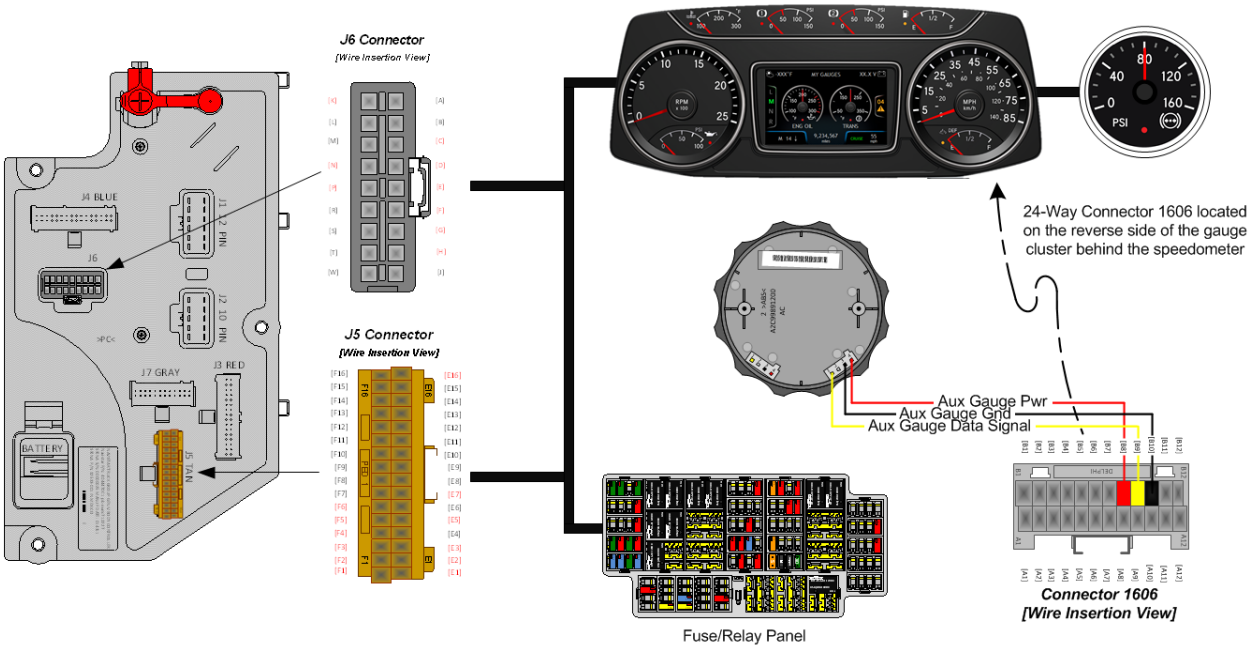

Body Controller Software Feature Codes:

- 597113 - BCM PROG, **AIR APPLICATION AUX GAUGE**

Body Controller Software Feature Code Parameters:

Parameter	ID	Description	Default	Units	Min	Max	Step
Brake_App_Filter_Param	128	Brake application gauge update rate. A value of 1 is the slowest and 255 is the fastest update rate	255	No Units	1	255	1
Brake_App_Min_WL	2337	Minimum set point for brake application in-gauge warning light	38020	psi	0	150	0.5
Brake_App_Max_WL	2343	Maximum set point for brake application in-gauge warning light. A value of 38020 means no maximum warning light.	38020	psi	0	150	0.5

LH_Brake_App_Alrm _Ty_Param	2348	Brake application gauge alarm type.	0	List	0	7	1

Parameter Definitions:

- **Brake_App_Filter_Param** – This parameter sets the brake application gauge update rate. The higher the number is, the faster the update rate. 255 is the fastest update rate available, and 1 is the slowest update rate available
- **Brake_App_Min_WL** - This parameter sets the minimum point for brake application in-gauge warning light. When the brake pressure falls below this set parameter, the warning light in the gauge will illuminate.
- **Brake_App_Max_WL** - This parameter sets the maximum point for brake application in-gauge warning light. When the brake pressure rises above this set parameter, the warning light in the gauge will illuminate.
- **LH_Brake_App_Alrm_Ty_Param** – This parameter defines the number of beeps associated with the brake application alarm.

How to Add This Feature:

Note: When adding an auxiliary gauge to a vehicle it will be the responsibly of the installer to cut a 2-inch circular hole in the upper right-hand region of the flat center panel area of the instrument panel to accommodate the additional gauge. If the gauge is the first to be added in this area, it will be necessary to install an initial 3-wire interface harness extending from the back of the main gauge cluster to one of the two connectors on the back of the auxiliary gauge. All subsequent auxiliary gauges can be “daisy chained” from one gauge to the next. The upper right-hand region of the flat center panel area of the instrument panel can accommodate up to five auxiliary gauges.

Parts Associated with This Feature:

PART NUMBER	DESCRIPTION	BEZEL	UNITS
AUXILIARY GAUGES			
4061112C1	AIR APPLICATION GAUGE	BLACK	ENGLISH
4057709C1	AIR APPLICATION GAUGE	BLACK	METRIC
3768403C1	AIR APPLICATION GAUGE	CHROME	ENGLISH
3768402C1	AIR APPLICATION GAUGE	CHROME	METRIC
GAUGE CLUSTER 24-WAY CONNECTOR PARTS			
3710061C1	GAUGE CLUSTER 24-WAY J7 CONNECTOR	N/A	N/A
3539892C1	LOCK #1 24-WAY J7 CONNECTOR	N/A	N/A
3539893C1	LOCK #2 24-WAY J7 CONNECTOR	N/A	N/A
3522073C1	WIRE TERMINAL J7 18-20 GAUGE	N/A	N/A
3534303C1	WIRE TERMINAL J7 20-22 GAUGE	N/A	N/A
AUXILIARY GAUGE-TO-GAUGE JUMPER HARNESS PARTS			
4063415C1	AUXILIARY GAUGE 4-WAY CONNECTOR	N/A	N/A

4062808C1	WIRE TERMINAL 18-20 GAUGE	N/A	N/A
4066723C91	GAUGE-TO-GAUGE JUMPER HARNESS	N/A	N/A

Parts Associated with Air Application Gauge Feature

How to Test This Feature:
This feature is added by programming the Body Control Module (BCM) using the Navistar Diamond Logic Builder software.

Note: This feature uses body controller-based software controls which can be diagnosed with Navistar's Diamond Logic® Builder software (see local dealer if not owned).

References:
Refer to the applicable International® Circuit Diagrams and Service Manuals

22.6. 16HHT: GAUGE, Ammeter 150-Ampere (AMP)

Feature Applicability to Vehicle Platforms:

- Line Haul Transport (LT)
- Regional Haul (RH)
- Heavy Extreme (HX) 2021 and Newer

Extended Description: This feature provides a gauge that displays the amperage draw on the vehicle electrical system.

System Block Diagram:

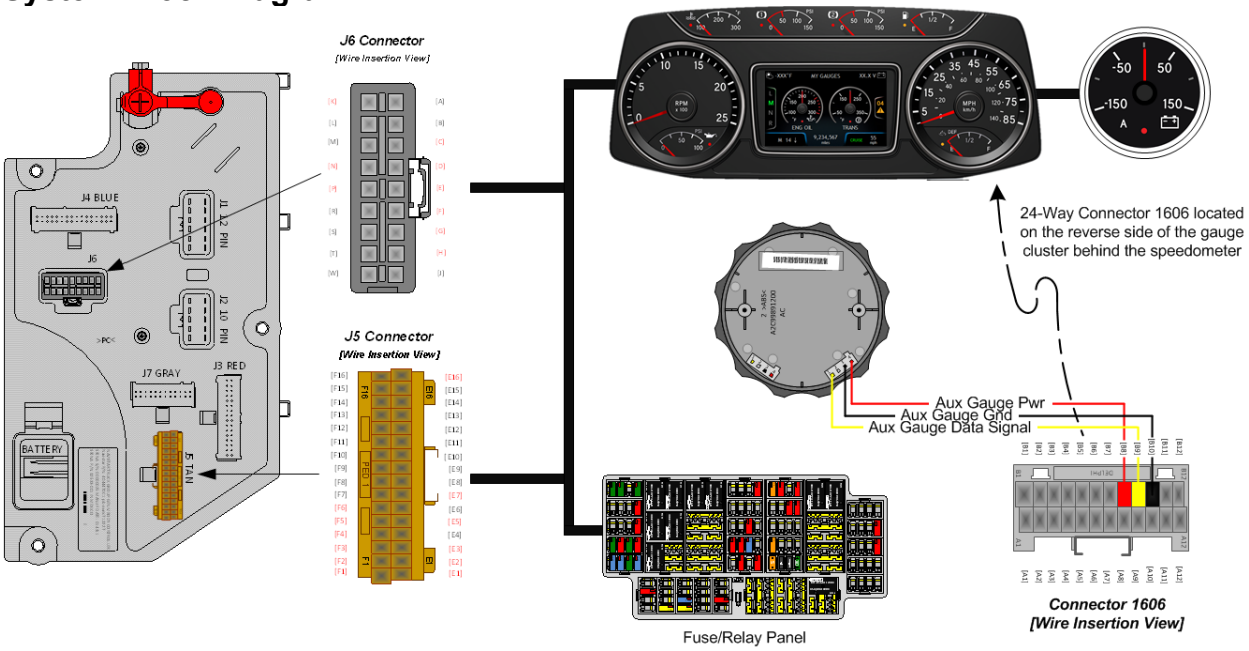

Body Controller Software Feature Codes:

- 597270 - BCM PROG, **AMMETER 150-AMP FOR AUX GAGUGE**

How to Add This Feature:

Note: When adding an auxiliary gauge to a vehicle it will be the responsibly of the installer to cut a 2-inch circular hole in the upper right-hand region of the flat center panel area of the instrument panel to accommodate the additional gauge. If the gauge is the first to be added in this area, it will be necessary to install an initial 3-wire interface harness extending from the back of the main gauge cluster to one of the two connectors on the back of the auxiliary gauge. All subsequent auxiliary gauges can be “daisy chained” from one gauge to the next. The upper right-hand region of the flat center panel area of the instrument panel can accommodate up to five auxiliary gauges.

Parts Associated with This Feature:

PART NUMBER	DESCRIPTION	BEZEL	UNITS
AUXILIARY GAUGES			
4061113C1	PYROMETER GAUGE	BLACK	ENGLISH
4061114C1	PYROMETER GAUGE	BLACK	METRIC
3768404C1	PYROMETER GAUGE	CHROME	ENGLISH
3768405C1	PYROMETER GAUGE	CHROME	METRIC
GAUGE CLUSTER 24-WAY CONNECTOR PARTS			
3710061C1	GAUGE CLUSTER 24-WAY J7 CONNECTOR	N/A	N/A
3539892C1	LOCK #1 24-WAY J7 CONNECTOR	N/A	N/A
3539893C1	LOCK #2 24-WAY J7 CONNECTOR	N/A	N/A
3522073C1	WIRE TERMINAL J7 18-20 GAUGE	N/A	N/A
3534303C1	WIRE TERMINAL J7 20-22 GAUGE	N/A	N/A
AUXILIARY GAUGE-TO-GAUGE JUMPER HARNESS PARTS			
4063415C1	AUXILIARY GAUGE 4-WAY CONNECTOR	N/A	N/A
4062808C1	WIRE TERMINAL 18-20 GAUGE	N/A	N/A
4066723C91	GAUGE-TO-GAUGE JUMPER HARNESS	N/A	N/A

Parts Associate with Amp Gauge Feature

How to Test This Feature:
This feature is added by programming the Body Control Module (BCM) using the Navistar Diamond Logic Builder software.

Note: This feature uses body controller-based software controls which can be diagnosed with Navistar's Diamond Logic® Builder software (see local dealer if not owned).

References:
Refer to the applicable International® Circuit Diagrams and Service Manuals

22.7. 16HKT: IP CLUSTER DISPLAY DIAGNOSTICS — Display on board diagnostics of fault codes in gauge cluster

Feature Applicability to Vehicle Platforms:

- Heavy Vocational (HV)
- Line Haul Transport (LT)
- Medium Vocational (MV)
- Regional Haul (RH)
- Heavy Extreme (HX) 2021 and Newer

Extended Description: This feature performs a self-test of the cluster and allows the retrieval of fault codes from the LCD display in the cluster. No hardware change is needed. This is a software configurable feature.

Note: Enabling this diagnostic will follow the programmed location of the Cruise switches.

System Block Diagram:

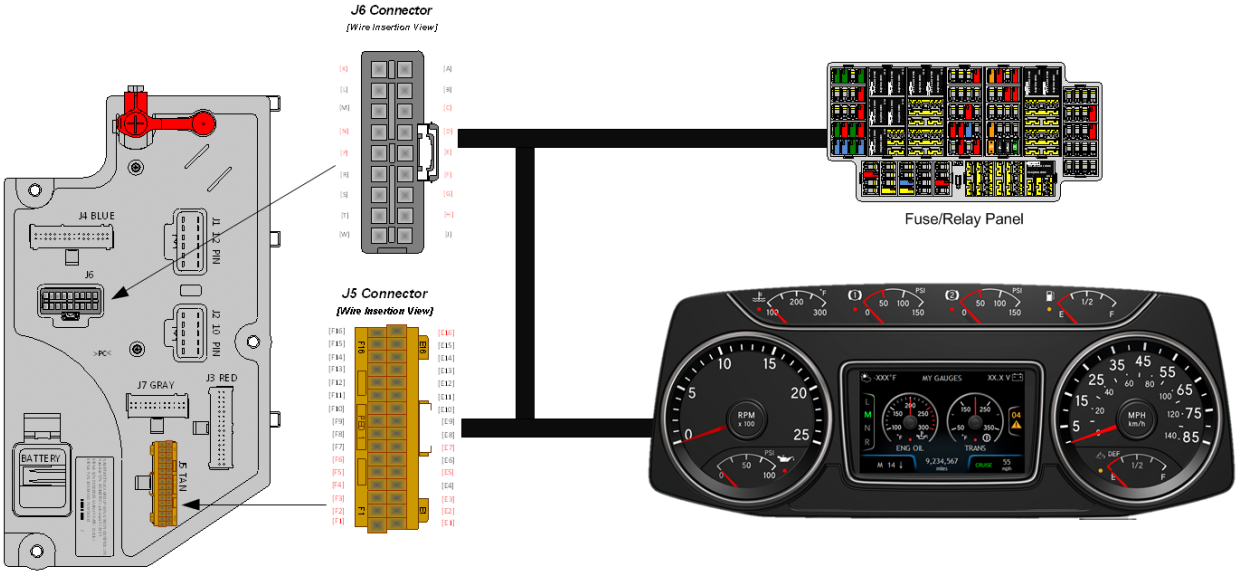

Body Controller Software Feature Codes:

- 597528 - **BCM PROG, CRUISE CONTROL ON CENTER PANEL**
- 597081 - **BCM PROG, CRUISE CONT STEER WHEEL**
- 597042 - **BCM PROG, DIAGNOSTICS LOCATION No On-Board Display**

597528 or 597081 must be enabled and 597042 must not be enabled.

How to Test This Feature:

1. Set Park Brake
2. Press and hold “Cruise On” switch and “Cruise Resume” switch
3. Odometer should display the number of active and past fault codes.
4. Pressing the selection button on the face of the cluster will cycle through the fault codes, or they will change to the next fault code every ten seconds.

Cycle the key to turn off diagnostic mode

Note: This feature uses body controller-based software controls which can be diagnosed with Navistar’s Diamond Logic® Builder software (see local dealer if not owned).

References:
Refer to the applicable International® Circuit Diagrams and Service Manuals

22.8. 16HLR: VIRTUAL GA, OIL TEMP, Air Application Requires Premium Cluster.

Feature Applicability to Vehicle Platforms:

- Heavy Extreme (HX) 2021 and Ne Heavy Vocational (HV)
- Line Haul Transport (LT)
- Medium Vocational (MV)
- Regional Haul (RH)
- Heavy Extreme (HX) 2021 and Newer

Extended Description: Feature code 16HLRS is a programmable virtual gauge to display the air application pressure in the center color display of the premium gauge cluster. The user can use the premium cluster display control switch to select this gauge for display in one of the corner selectable locations or one of the two centered virtual gauge locations. Feature code 16HLR requires that one of the premium gauge clusters, 16GDG, 16GDH, 16GDJ, 16GDS, 16GDT, 16GDU, 16GDV, 16GDW or 16GDX is ordered and installed in the vehicle. Feature code 16HLR can also be enabled in the body controller software through the use of Diamond Logic® Builder software by turning on the Body Controller software feature detailed below and installing any additional wiring and sensor(s) required for the feature.

22.9. 16HLS: VIRTUAL GA, OIL TEMP, REAR AXLE Requires Premium Cluster.

Feature Applicability to Vehicle Platforms:

- Heavy Vocational (HV)
- Line Haul Transport (LT)
- Medium Vocational (MV)
- Regional Haul (RH)

- Heavy Extreme (HX) 2021 and Newer

Extended Description: Feature code 16HLS is a programmable virtual gauge to display the rear axle oil temperature in the center color display of the premium gauge cluster. The user can use the premium cluster display control switch to select this gauge for display in one of the corner selectable locations or one of the two centered virtual gauge locations. Feature code 16HLS requires that one of the premium gauge clusters, 16GDG, 16GDH, 16GDJ, 16GDS, 16GDT, 16GDU, 16GDV, 16GDW or 16GDX is ordered and installed in the vehicle. Feature code 16HLS can also be enabled in the body controller software through the use of Diamond Logic® Builder software by turning on the Body Controller software feature detailed below and installing any additional wiring and sensor(s) required for the feature.

System Block Diagram:

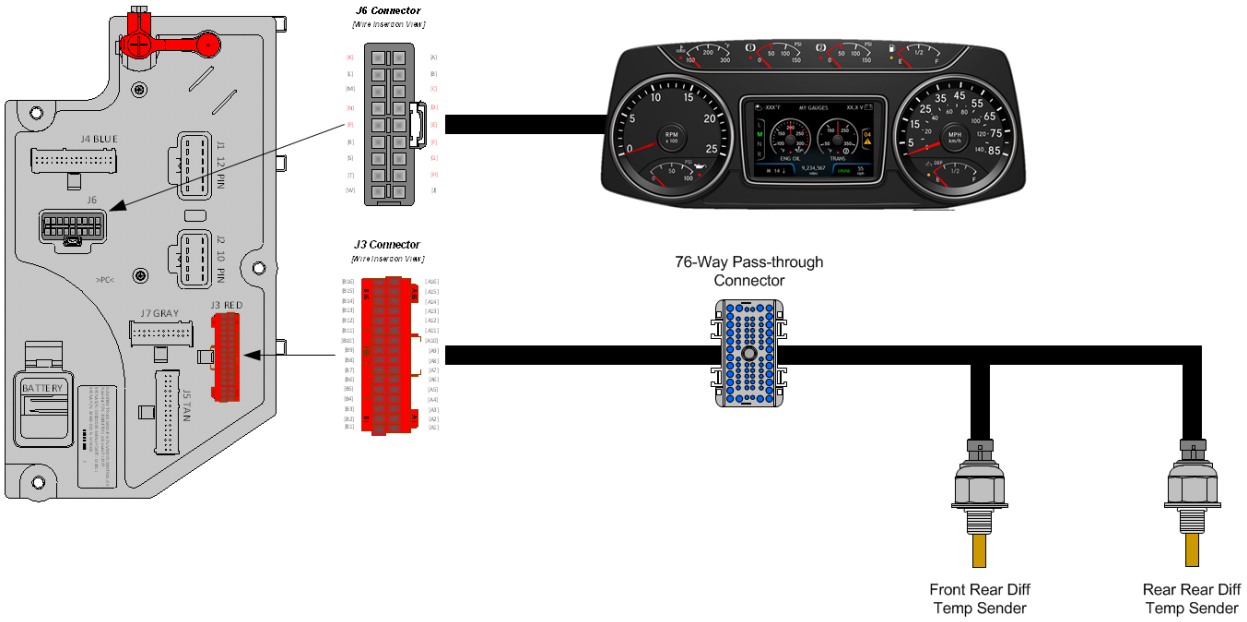

Body Controller Software Feature Codes:

- 597116 BCM PROG, AXLE TEMP GAUGE for Single Virtual Gauge
- 597118 BCM PROG, AXLE TEMP GAUGE for Dual Virtual Gauge

Body Controller Software Feature Code Parameters:

Parameter for Feature 597116							
Parameter	**ID**	**Description**	**Default**	**Units**	**Min**	**Max**	**Step**
Rear_RR_Axle_Temp _Filter_Param	519	Rear-rear axle temperature gauge update rate. A value of 1 is the slowest and 255 is the fastest update rate.	255	No Units	1	255	1

Rear_RR_Axle_Temp_Max_WL	2296	Maximum set point for rear-rear axle temperature in-gauge warning light	240.8	F	100	300	1
Rear_RR_Axle_Temp_Min_WL	2303	Minimum set point for rear-rear axle temperature in-gauge warning light. A value of 117923 means no minimum warning light.	117920	F	100	300	1
Rear_RR_Axle_Temp_Alrm_Ty_Param	2365	Rear-rear axle temperature gauge alarm type.	4	List	0	7	1

Parameter for Feature 597118							
Parameter	**ID**	**Description**	**Default**	**Units**	**Min**	**Max**	**Step**
Rear_RR_Axle_Temp_Filter_Param	519	Rear-rear axle temperature gauge update rate. A value of 1 is the slowest and 255 is the fastest update rate.	255	No Units	1	255	1
Rear_RR_Axle_Temp_Max_WL	2296	Maximum set point for rear-rear axle temperature in-gauge warning light	240.8	F	100	300	1
Rear_RR_Axle_Temp_Min_WL	2303	Minimum set point for rear-rear axle temperature in-gauge warning light. A value of 117920 means no minimum warning light.	117920	F	100	300	1
Rear_RR_Axle_Temp_Alrm_Ty_Param	2365	Rear-rear axle temperature gauge alarm type.	4	List	0	7	1
FWD_RR_Axle_Temp_Filter_Param	277	FWD-rear axle temperature gauge update rate. A value of 1 is the slowest and 255 is the fastest update rate.	255	No Units	1	255	1
FWD_RR_Axle_Temp_Max_WL	2294	Maximum set point for FWD-rear axle temperature in-gauge warning light	240.8	F	100	300	1
FWD_RR_Axle_Temp_Min_WL	2295	Minimum set point for FWD-rear axle temperature in-gauge warning light. A value of 117920 means no minimum warning light.	117920	F	100	300	1
FWD_RR_Axle_Temp_Alrm_Ty_Param	2364	FWD-rear axle temperature gauge alarm type.	4	List	0	7	1

Parameter Definitions:

- **Rear_RR_Axle_Temp_Filter_Param** – This parameter sets the rear-rear axle temperature update rate. The higher the number is, the faster the update rate. 255 is the fastest update rate available, and 1 is the slowest update rate available

- **Rear_RR_Axle_Temp_Max_WL** - This parameter sets the maximum point for rear-rear axle temperature in-gauge warning light. When the rear-rear axle temperature rises above this set parameter, the warning light in the gauge will illuminate.

- **Rear_RR_Axle_Temp_Min_WL** - This parameter sets the minimum point for rear-rear axle temperature in-gauge warning light. When the rear-rear axle temperature falls below this set parameter, the warning light in the gauge will illuminate. A value of 117920 means no minimum warning light
- **Rear_RR_Axle_Temp_Alrm_Ty_Param** – This parameter defines the number of beeps associated with the rear-rear axle temperature alarm.
- **FWD_RR_Axle_Temp_Filter_Param** – This parameter sets the forward-rear axle temperature update rate. The higher the number is, the faster the update rate. 255 is the fastest update rate available, and 1 is the slowest update rate available
- **FWD_RR_Axle_Temp_Max_WL** - This parameter sets the maximum point for forward-rear axle temperature in-gauge warning light. When the forward-rear axle temperature rises above this set parameter, the warning light in the gauge will illuminate.

- **FWD_RR_Axle_Temp_Min_WL** - This parameter sets the minimum point for forward-rear axle temperature in-gauge warning light. When the forward-rear axle temperature falls below this set parameter, the warning light in the gauge will illuminate. A value of 117920 means no minimum warning light
- **FWD_RR_Axle_Temp_Alrm_Ty_Param** – This parameter defines the number of beeps associated with the forward-rear axle temperature alarm.

Note/s About Possible Software Feature Conflicts: Only one axle temperature feature can be used.

How to Test This Feature:
This feature is added by programming the Body Control Module (BCM) using the Navistar Diamond Logic Builder software.

Note: This feature uses body controller-based software controls which can be diagnosed with Navistar's Diamond Logic® Builder software (see local dealer if not owned).

References:
Refer to the applicable International® Circuit Diagrams and Service Manuals

22.10. 16HLU: VIRTUAL GA, OIL TEMP, AUTO XMSN for Allison Transmission, Requires Premium Cluster.

Feature Applicability to Vehicle Platforms:

- Heavy Vocational (HV)
- Line Haul Transport (LT)
- Medium Vocational (MV)
- Regional Haul (RH)
- Heavy Extreme (HX) 2021 and Newer

Extended Description: Feature code 16HLU is a programmable virtual gauge to display the Allison automatic transmission oil temperature in the center color display of the premium gauge cluster. The user can use the premium cluster display control switch to select this gauge for display in one of the corner selectable locations or one of the two centered virtual gauge locations. Feature code 16HLU requires that one of the premium gauge clusters, 16GDG, 16GDH, 16GDJ, 16GDS, 16GDT, 16GDU, 16GDV, 16GDW or 16GDX is ordered and installed in the vehicle. Feature 16HLU also requires that the vehicle has an Allison automatic transmission. Feature code 16HLU can also be enabled in the body controller software through the use of Diamond Logic® Builder software by turning on the Body Controller software feature detailed below and installing any additional wiring and sensor(s) required for the feature.

System Block Diagram:

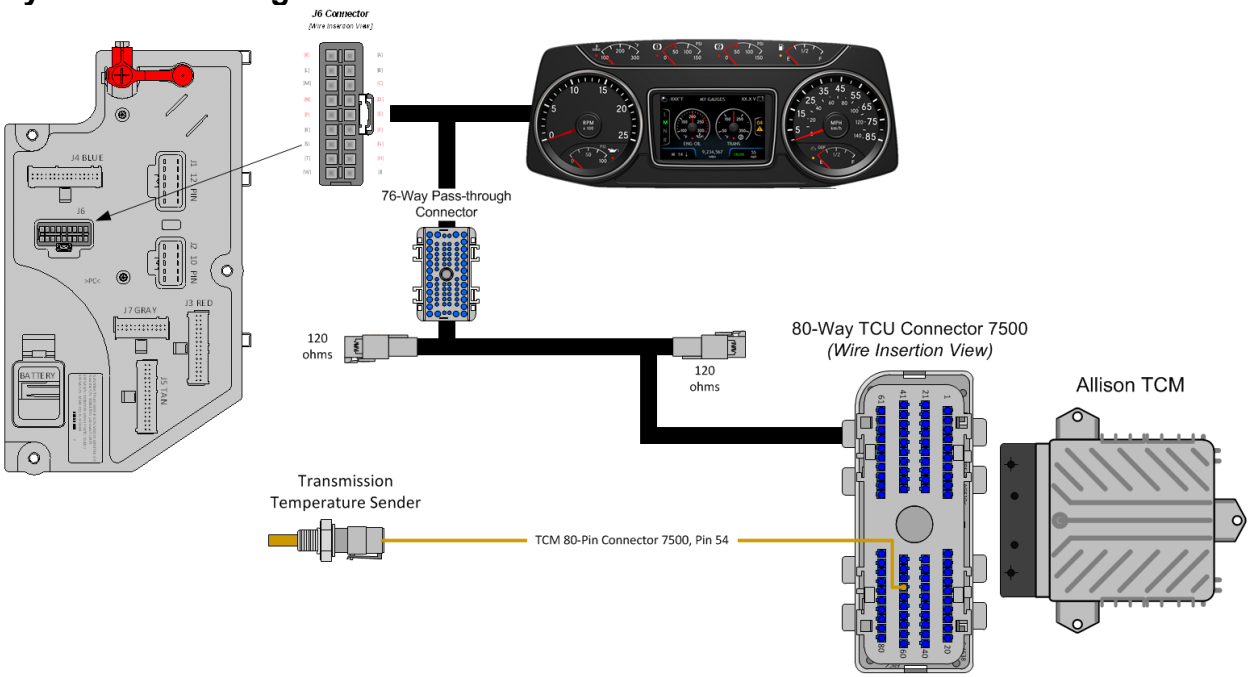

Body Controller Software Feature Codes:

- 597126 - BCM PROG, **TRANS OIL TEMP GAUGE, Through TCM; for Virtual Gauge**

Body Controller Software Feature Code Parameters:

Parameter	ID	Description	Default	Units	Min	Max	Step
Trans_Oil_Temp_Filter_Param	589	Transmission oil temperature gauge update rate. A value of 1 is the slowest and 255 is the fastest update rate.	255	No Units	1	255	1
Trans_Oil_Temp_Max_WL	2272	Maximum set point for transmission oil temperature in-gauge warning light	251	F	100	300	0.03125
Trans_Oil_Temp_Min_WL	2273	Minimum set point for transmission oil temperature in-gauge warning light. The default of 3226 means no minimum warning light.	3226	F	100	300	0.03125
Trans_Oil_Temp_Alrm_Ty_Param	2356	transmission oil temperature gauge alarm type.	4	List	0	7	1

Parameter Definitions:

- **Trans_Oil_Temp_Filter_Param** – This parameter sets the transmission oil temperature update rate. The higher the number is, the faster the update rate. 255 is the fastest update rate available, and 1 is the slowest update rate available
- **Trans_Oil_Temp_Max_WL** - This parameter sets the maximum point for transmission oil temperature in-gauge warning light. When the oil temperature rises above this set parameter, the warning light in the gauge will illuminate.
- **Trans_Oil_Temp_Min_WL** - This parameter sets the minimum point for transmission oil temperature in-gauge warning light. When the oil temperature falls below this set parameter, the warning light in the gauge will illuminate
- **Trans_Oil_Temp_Alrm_Ty_Param** – This parameter defines the number of beeps associated with the transmission oil temperature alarm.

Parts Associated with This Feature:

PART NUMBERS	DESCRIPTION
ALLISON TRANSMISSION CONTROL MODULE CONNECTOR PARTS	
3605713C1	80-WAY TRANSMISSION CONTROL MODULE CONNECTOR (7500)
3606525C1	80-WAY TRANSMISSION CONTROL MODULE CONNECTOR LOCK
3686945C1	WIRE TERMIAL 18-GUAGE
3606525C1	CONNECTOR CAVITY PLUG

Parts Associated with Feature

How to Test This Feature:
Verify the Oil Temperature Gauge MAN XMSN is communicating via the 1939 CAN bus using Diamond Logic Builder software diagnostic mode.

Note: This feature uses body controller-based software controls which can be diagnosed with Navistar's Diamond Logic® Builder software (see local dealer if not owned).

References:
Refer to the applicable International® Circuit Diagrams and Service Manuals

22.11. 16HLV: VIRTUAL GA, OIL TEMP, MANL XMSN for Manual Transmission, Requires Premium Cluster.

- **Feature Applicability to Vehicle** Heavy Vocational (HV)
- Line Haul Transport (LT)
- Medium Vocational (MV)
- Regional Haul (RH)
- Heavy Extreme (HX) 2021 and Newer

Extreme (HX) 2021 and Newer

Extended Description: Feature code 16HLV is a programmable virtual gauge to display manual transmission oil temperature in the center color display of the premium gauge cluster. The user can use the premium cluster display control switch to select this gauge for display in one of the corner selectable locations or one of the two centered virtual gauge locations. Feature code 16HLV requires that one of the premium gauge clusters, 16GDG, 16GDH, 16GDJ, 16GDS, 16GDT, 16GDU, 16GDV, 16GDW or 16GDX is ordered and installed in the vehicle. Feature code 16HLV can also be enabled in the body controller software through the use of Diamond Logic® Builder software by turning on the Body Controller software feature detailed below and installing any additional wiring and sensor(s) required for the feature.

System Block Diagram:

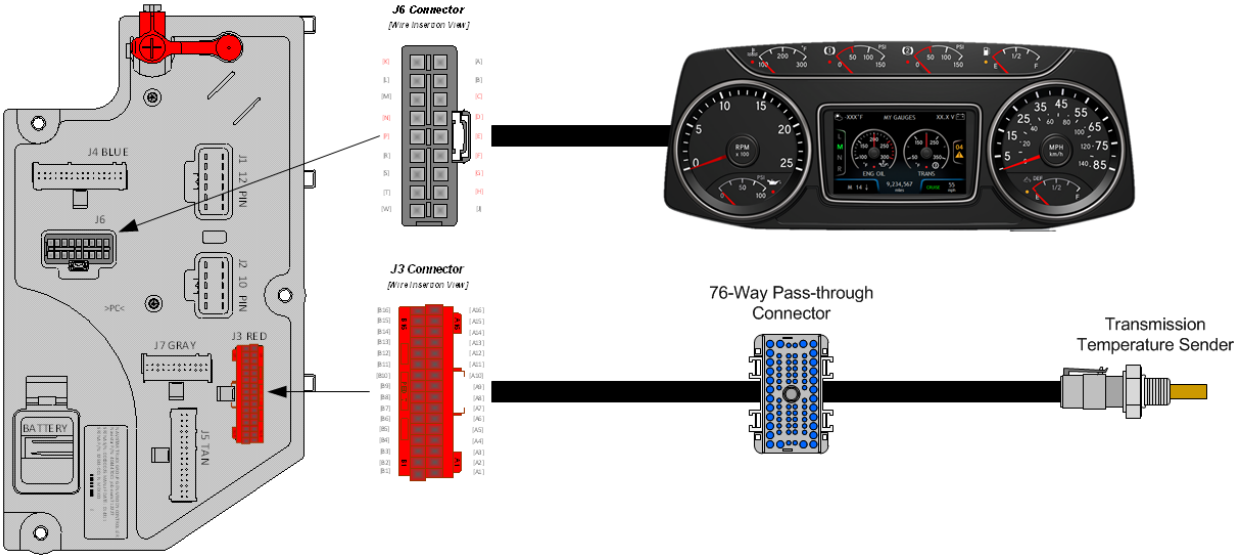

Body Controller Software Feature Codes:

- 597124 - BCM PROG, TRANS OIL TEMP GAUGE, Through BC: for Virtual Gage

Body Controller Software Feature Code Parameters:

Parameter	ID	Description	Default	Units	Min	Max	Step
597124 - BCM PROG, TRANS OIL TEMP GAUGE							
Trans_Oil_Temp_Filter_Param	589	A value of 1 is the slowest and 255 is the fastest update rate	255	No Units	1	255	1
Trans_Oil_Temp_Max_WL	2272	Maximum set point for transmission oil temperature in-gauge warning light	250	F	100	300	1
Trans_Oil_Temp_Min_WL	2273	Minimum set point for transmission oil temperature in-gauge warning light	100	F	100	300	1
Trans_Oil_Temp_Alrm_Ty_Param	2356	A list of alarm type codes to teach/reteach the cluster.	4	No Units	3	100	1

Parameter Definitions:

- **Trans_Oil_Temp_Filter_Param** – A value of 1 is the slowest and 255 is the fastest update rate
- **Trans_Oil_Temp_Max_WL** – Maximum set point for transmission oil temperature in-gauge warning light
- **Trans_Oil_Temp_Min_WL** – Minimum set point for transmission oil temperature in-gauge warning light

- **Trans_Oil_Temp_Alrm_Ty_Param** – A list of alarm type codes to teach/reteach the cluster

How to Test This Feature:
This feature is added by programming the Body Control Module (BCM) using the Navistar Diamond Logic Builder software.

Note: This feature uses body controller-based software controls which can be diagnosed with Navistar's Diamond Logic® Builder software (see local dealer if not owned).

References:
Refer to the applicable International® Circuit Diagrams and Service Manuals

22.12. 16HLW: VIRTUAL GAUGE, OIL TEMP, ENG Requires Premium Cluster.

Feature Applicability to Vehicle Platforms:

- Heavy Vocational (HV)
- Line Haul Transport (LT)
- Medium Vocational (MV)
- Regional Haul (RH)
- Heavy Extreme (HX) 2021 and Newer

Extended Description: Feature code 16HLW is a programmable virtual gauge to display engine oil temperature in the center color display of the premium gauge cluster. The user can use the premium cluster display control switch to select this gauge for display in one of the corner selectable locations or one of the two centered virtual gauge locations. Feature code 16HLW requires that one of the premium gauge clusters, 16GDG, 16GDH, 16GDJ, 16GDS, 16GDT, 16GDU, 16GDV, 16GDW or 16GDX is ordered and installed in the vehicle. Feature code 16HLW can also be enabled in the body controller software through the use of Diamond Logic® Builder software by turning on the Body Controller software feature detailed below and installing any additional wiring and sensor(s) required for the feature.

System Block Diagram:

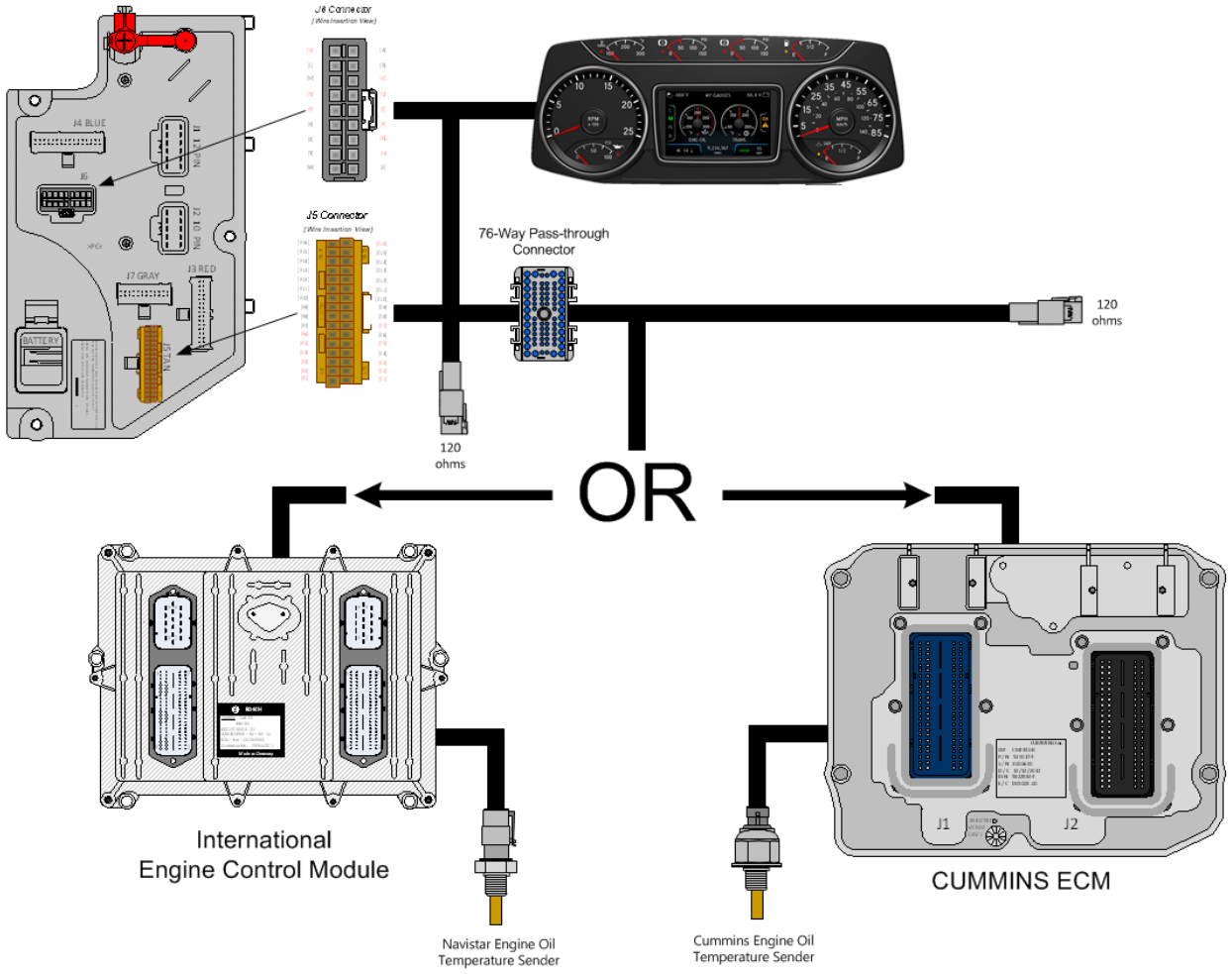

Body Controller Software Feature Codes:

- 597122 - BCM PROG, ENG OIL TEMP GAUGE Through ECM; for Virtual Gauge

Body Controller Software Feature Code Parameters:

Parameter	ID	Description	Default	Units	Min	Max	Step
Eng_Oil_Temp_Filter_Param	219	Engine oil temperature gauge update rate. A value of 1 is the slowest and 255 is the fastest update rate.	255	No Units	1	255	1
Eng_Oil_Temp_Max_WL	2274	Maximum set point for engine oil temperature in-gauge warning light	251	F	100	300	0.03125
Eng_Oil_Temp_Min_WL	2291	Minimum set point for engine oil temperature in-gauge warning light. The default of 3226 means no minimum warning light.	3226	F	100	300	0.03125

Eng_Oil_Temp_Alrm_Ty_Param	2354	Engine oil temperature gauge alarm type.	4	List	0	7	1

Parameter Definitions:

- **Eng_Oil_Temp_Filter_Param** – This parameter sets the engine oil temperature update rate. The higher the number is, the faster the update rate. 255 is the fastest update rate available, and 1 is the slowest update rate available
- **Eng_Oil_Temp_Max_WL** - This parameter sets the maximum point for engine oil temperature in-gauge warning light. When the oil temperature rises above this set parameter, the warning light in the gauge will illuminate.
- **Eng_Oil_Temp_Min_WL** - This parameter sets the minimum point for engine oil temperature in-gauge warning light. When the oil temperature falls below this set parameter, the warning light in the gauge will illuminate
- **Eng_Oil_Temp_Alrm_Ty_Param** – This parameter defines the number of beeps associated with the engine oil temperature alarm.

How to Test This Feature:
Verify the ENG Oil Temperature Gauge is communicating via the 1939 CAN bus using Diamond Logic Builder software in diagnostic mode.

References:
Refer to the applicable International® Circuit Diagrams and Service Manuals

23. In Cab Battery Feed Power Source

23.1. 8518: CIGAR LIGHTER Includes Ash Cup.

Feature Applicability to Vehicle Platforms:

- Heavy Vocational (HV)
- Line Haul Transport (LT)
- Medium Vocational (MV)
- Regional Haul (RH)
- Heavy Extreme (HX) 2021 and Newer

Extended Description: This feature provides a cigar lighter in the center panel of the dash and includes an ash cup in the cup holder.

System Block Diagram:

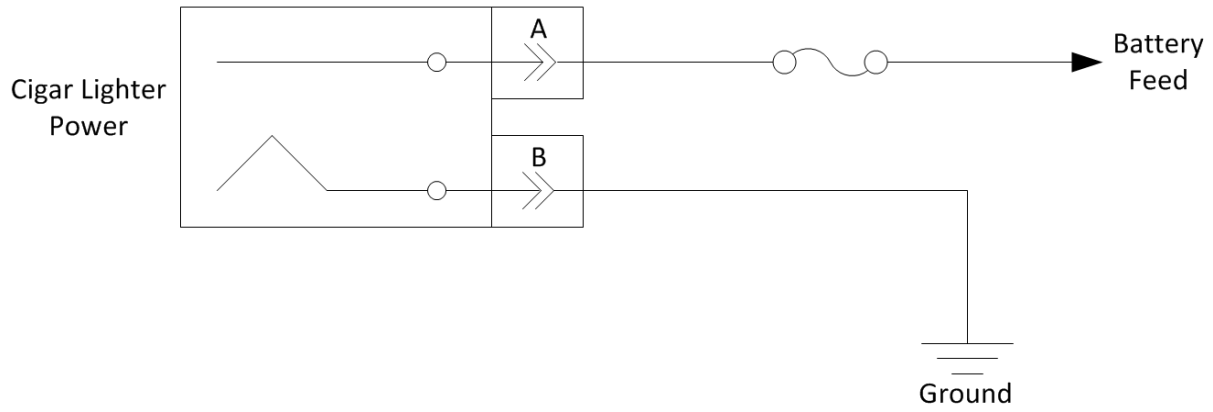

How to Test This Feature:
To test these circuits, refer to the applicable circuit diagram for the feature and verify that battery voltage is present in the correct key-state for each respective feature.

References:
Refer to the applicable International® Circuit Diagrams and Service Manuals

23.2. 8718: POWER SOURCE Cigar Type Receptacle without Plug and Cord.

Feature Applicability to Vehicle Platforms:

- Heavy Vocational (HV)
- Line Haul Transport (LT)
- Medium Vocational (MV)
- Regional Haul (RH)
- Heavy Extreme (HX) 2021 and Newer

Extended Description: This feature provides a power source for customers who wish to use CB radios, hand held spotlights, trouble lights or other accessories that plug into the cigar type receptacle for 12-volt power.

System Block Diagram:

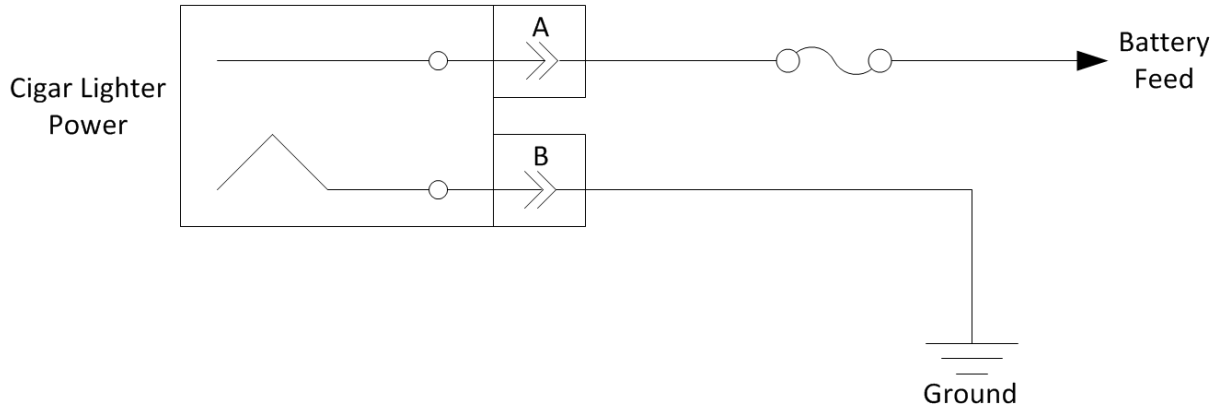

How to Test This Feature:
To test these circuits, refer to the applicable circuit diagram for the feature and verify that battery voltage is present in the correct key-state for each respective feature.

References:
Refer to the applicable International® Circuit Diagrams and Service Manuals

23.3. 08WCK POWER SOURCE, TERMINAL TYPE 2-Post.

Feature Applicability to Vehicle Platforms:

- Heavy Vocational (HV)
- Line Haul Transport (LT)
- Medium Vocational (MV)
- Regional Haul (RH)
- Heavy Extreme (HX) 2021 and Newer

Extended Description: This feature provides a power source for customers who wish to use CB radios, hand held spotlights, trouble lights or other accessories that plug into the cigar type receptacle for 12-volt power.

System Block Diagram:

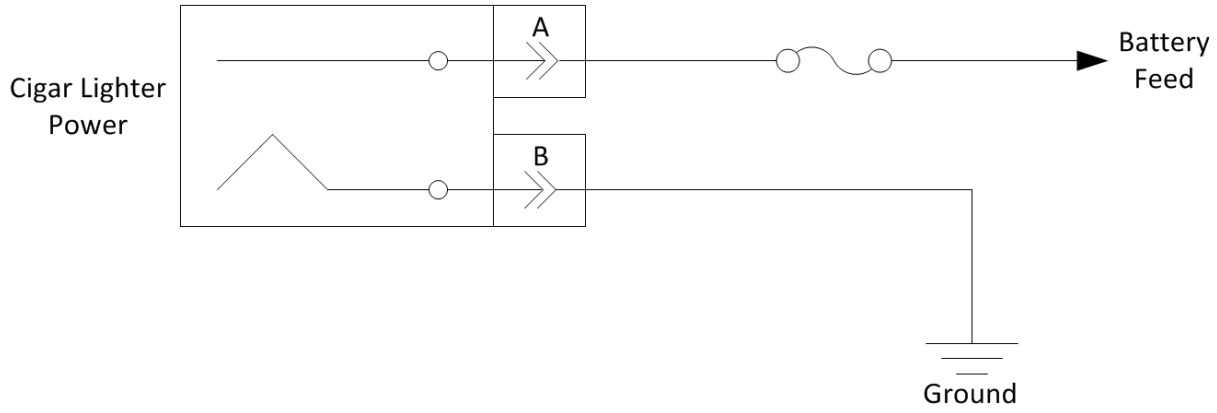

How to Test This Feature:
To test these circuits, refer to the applicable circuit diagram for the feature and verify that battery voltage is present in the correct key-state for each respective feature.

References:
Refer to the applicable International® Circuit Diagrams and Service Manuals

23.4. 08XHR POWER SOURCE, ADDITIONAL Auxiliary Power Outlet (APO) & USB Port, Located in the Instrument Panel.

Feature Applicability to Vehicle Platforms:

- Heavy Vocational (HV)
- Line Haul Transport (LT)
- Medium Vocational (MV)
- Regional Haul (RH)
- Heavy Extreme (HX) 2021 and Newer

Extended Description: This feature provides a power source for customers who wish to use CB radios, hand held spotlights, trouble lights or other accessories that plug into the cigar type receptacle for 12-volt power.

The feature also provides a USB charging port.

System Block Diagram:

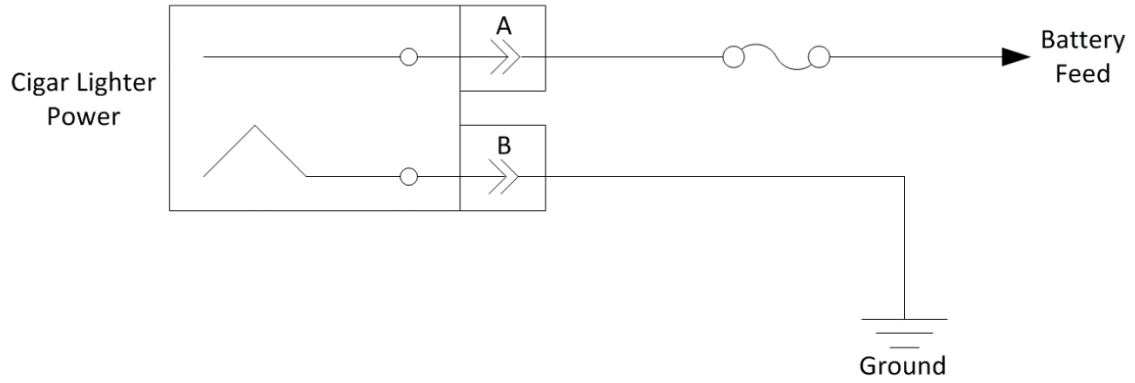

How to Test This Feature:
To test these circuits, refer to the applicable circuit diagram for the feature and verify that battery voltage is present in the correct key-state for each respective feature.

References:
Refer to the applicable International® Circuit Diagrams and Service Manuals

23.5. 08XKR: POWER SOURCE, Two Auxiliary Power Outlets (APO) and Two USB Ports, Located in the Instrument Panel.

Feature Applicability to Vehicle Platforms:

- Heavy Vocational (HV)
- Line Haul Transport (LT)
- Medium Vocational (MV)
- Regional Haul (RH)
- Heavy Extreme (HX) 2021 and Newer

Extended Description: This feature provides two power sources for customers who wish to use CB radios, hand held spotlights, trouble lights or other accessories that plug into the cigar type receptacle for 12-volt power.

The feature also provides two USB charging ports.

System Block Diagram:

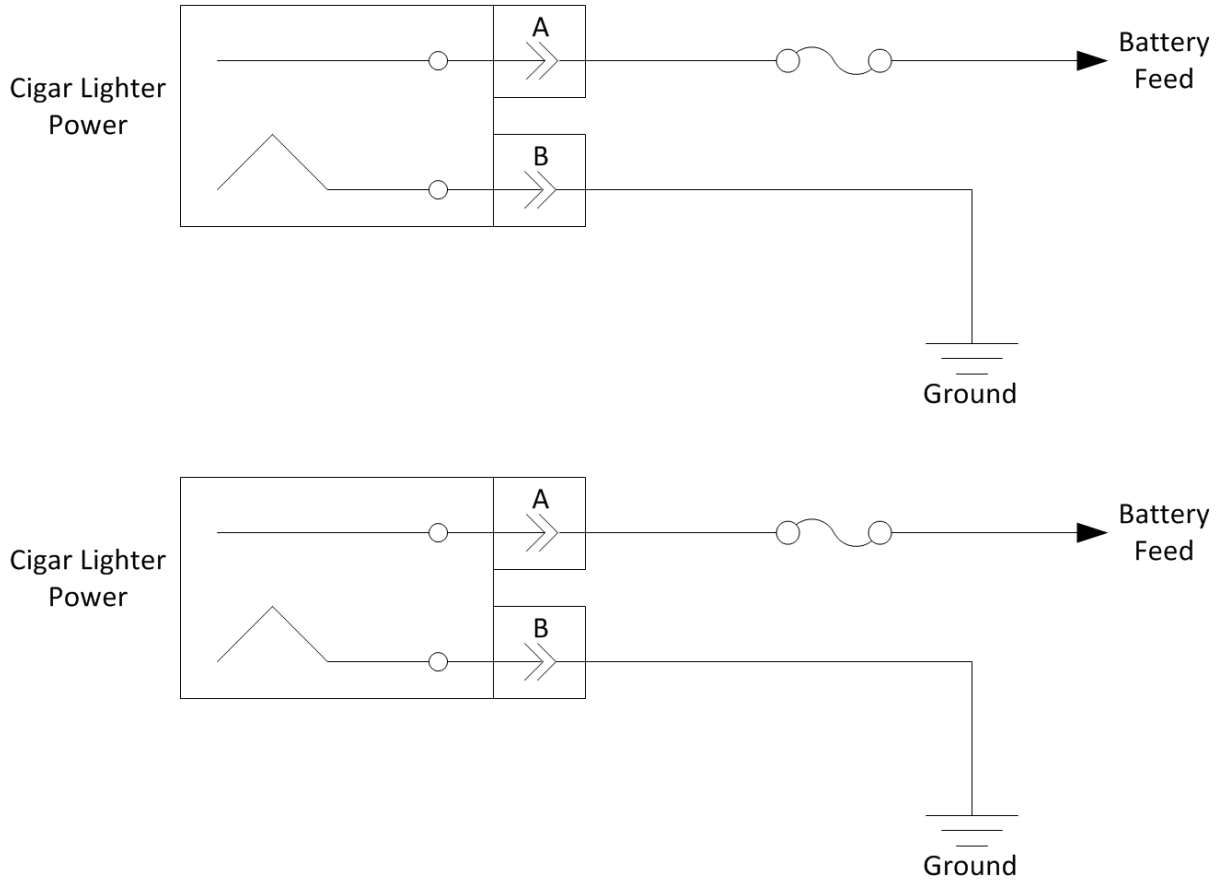

How to Test This Feature:
To test these circuits, refer to the applicable circuit diagram for the feature and verify that battery voltage is present in the correct key-state for each respective feature.

References:
Refer to the applicable International® Circuit Diagrams and Service Manuals

24. Indicator Lights and Alarms

24.1. 60AJC: BDY INTG, INDICATOR LIGHTS (2) One for Gate Open and One for Rear Alert, Includes Audible Alarm, Programmable Mode for Various Switch Action (requires 2 Remote Power Module (RPM) inputs).

Feature Applicability to Vehicle Platforms:

- Heavy Vocational (HV)
- Medium Vocational (MV)
- Heavy Extreme (HX) 2021 and Newer

Extended Description: This feature provides a custom alarm package designed for the Refuse/Waste Applications. It provides both an audible and visual alarm for Gate Open and Rear Alert. Red indicator lights are located in prime viewing area of the driver in the switch pack. Audible alarm provides a second level of warning to the driver to indicate the status of these two equipment options.

The gate open indicator light is ON constant when the gate open input is active with the park brake set. If the park brake is released, with the gate open input active, the gate open indicator shall flash at 0.6-second intervals, accompanied by an audible alarm. Flexibility is provided through programmable parameters to establish whether the inputs are active high (12V) or active low (GND). See the Diamond Logic® Builder software to set programmable parameters and for pin location.

Rear Alert provides the operator the capability to communicate from the rear of the vehicle to the cab. A customer-mounted switch is wired into the RPM input connector (See the Diamond Logic® Builder software for pin location). The ignition (IGN) switch must be in “ignition” for this feature to function. Programmable Parameters allow the customer to establish whether the input is active at 12 volts or active at GND. When the operator activates the customer-mounted switch, the rear alert light in the gauge cluster illuminates and an audible alarm sounds.

System Block Diagram:

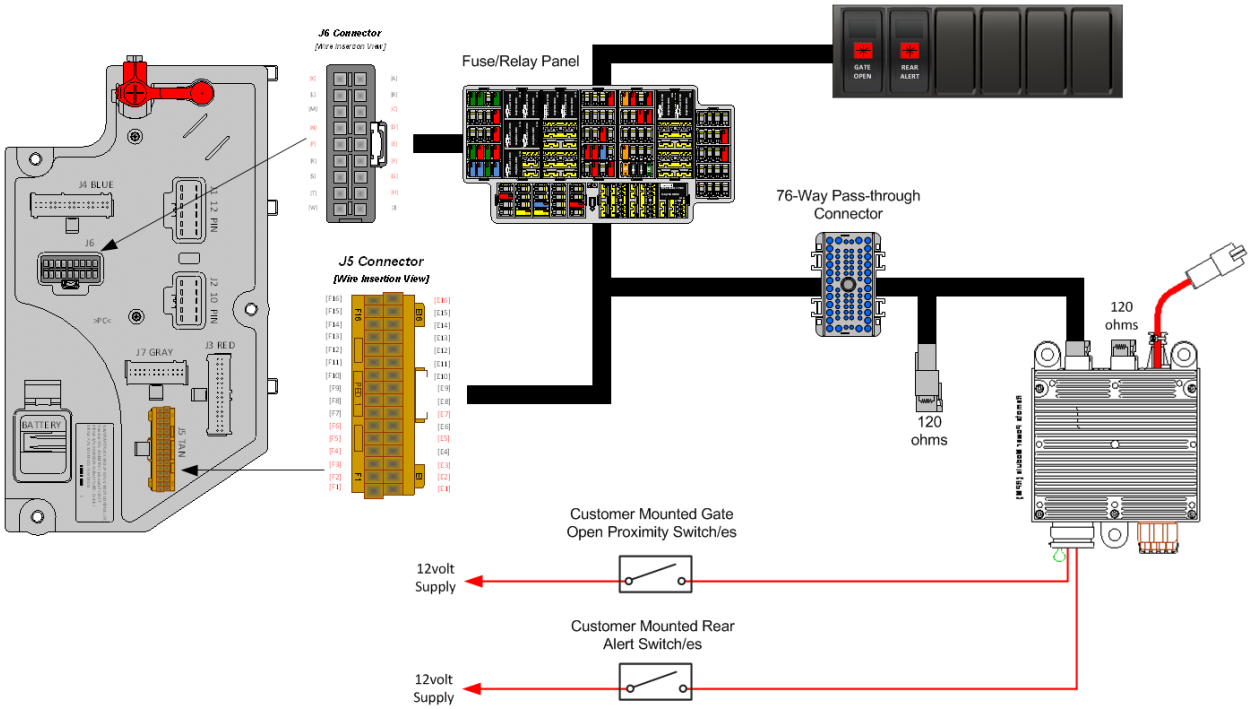

Body Controller Software Feature Codes:

- 597341 - BCM PROG, TAILGATE OPEN WARN Light and buzzer, with Reverse Input
- 597345 - BCM PROG, ALARM IN CAB with External Control

Body Controller Software Feature Code Parameters:

Parameter	ID	Description	Default	Units	Min	Max	Step
597341 - BCM PROG, TAILGATE OPEN WARN Light and buzzer							
TEM_Tail_Gate_Input_Active_State	2160	This parameter is used to set the voltage level that indicates when the tail gate alert should be active. 0 = Open, 1 = GND, 3 = 12V	3	No Units	0	3	1
TEM_Tail_Gate_Park_Brake_Inhibit	2165	When set, the tail gate alert will only alert if the park brake is not set.	0	No Units	0	1	1
TEM_Tail_Gate_Transmission_Interlock	2167	This parameter is used to determine how the tail gate alert acts based upon the transmission.	3	No Units	0	3	1
TEM_Tail_Gate_Alarm_Period	2172	Once the audible alarm has stopped continuous beeping and the gate open indicator remains illuminated, this parameter determines the length of time between individual beeps of the audible alarm.	20	seconds	10	60	1
TEM_Tail_Gate_Alarm_Period	2175	This parameter determines the length of time that the audible	10	seconds	0	60	1

		alarm will beep continuously. If this parameter is set to 0, the audible alarm will beep continuously as long as the gate open indicator is illuminated.					
597345 - BCM PROG, ALARM IN CAB with External Control							
TEM_Rear_Alert_Input_Active_State	2168	This parameter is used to set the voltage level that indicates when the rear alert should be active. 0 = Open, 1 = GND, 3 = 12V	3	No Units	0	3	1

Parameter Definitions:

- **597341 - BCM PROG, TAILGATE OPEN WARN Light and buzzer, with Reverse Input**
- **TEM_Tail_Gate_Input_Active_State** - This parameter indicates the state that the Body Controller (BCM) will read as active for the customer-installed switch for the tail gate open function (as it goes into the Remote Power Module (RPM) input). This active state will be used to tell the BCM when the tail gate has been opened:
  - 0 = Input active when open circuit
  - 1 = Input active when grounded
  - 2 = not used
  - 3 = Input active when at 12V
- **TEM_Tail_Gate_Park_Brake_Inhibit** – If parameter is turned ON, the tailgate alert will only alert when the Park Brake is released.
- **TEM_Tail_Gate_Transmission_Interlock** - This parameter indicates the activation of the tailgate alert based on transmission gear:
  - 0 = Ignores Gear
  - 1 = Alert will only activate if the transmission is NOT in reverse
  - 2 = Alert will only activate if transmission is in reverse
  - 3 = Alert will activate for the tailgate sensor or if the transmission is in reverse
- **TEM_Tail_Gate_Alarm_Period** - This parameter sets the interval time between individual beeps of the audible alarm, after the continuous time for alarm has expired.
- **TEM_Tail_Gate_Alarm_Timeout** - This parameter determines the length of time that the audible alarm will beep continuously after the gate is opened and the park brake is released. If this parameter is set to 0, the audible alarm will beep continuously as long as the gate open indicator is illuminated. Once the audible alarm has stopped continuous beeping (as set by TEM_Tail_Gate_Alarm_Timeout parameter) and the gate open indicator remains illuminated.

- **597345 - BCM PROG, ALARM IN CAB with External Control**
- **TEM_Rear_Alert_Input_Active_State** - This parameter indicates the state that the Body Controller (BCM) will read as active for the customer-installed external switch for the purpose of driver alert:
    - 0 = Input active when open circuit
    - 1 = Input active when grounded
    - 2 = not used
    - 3 = Input active when at 12V

Note/s About Possible Software Feature Conflicts:
597341 and 597342 are mutually exclusive

Parts Associated with This Feature:

PART NUMBER	DESCRIPTION
3766361C1	LIGHT, INDICATOR, GATE OPEN
3766362C1	LIGHT, INDICATOR, REAR ALERT
1698937C1	23-WAY RPM INPUT CONNECTOR TERMINAL (18-GUAGE)

Indicator Lights and Input Terminal part numbers.

How to Test This Feature:
1. Set park brake.
2. Open the tailgate.
3. Verify that the input labeled Tail_Gate_Open_Input is receiving the correct voltage (as programmed in the Diamond Logic® Builder software).
4. Verify that the red “Gate Open” indicator light in the switch pack comes on.
5. Release park brake.
6. Verify that indicator light flashes and audible alarm sounds and works according to the set programmable parameters seen above.
7. Close tail gate.
8. Reset park brake.
9. Activate Rear Alert switch.
10. Verify that the input labeled Rear_Alert_Switch_Input is receiving the correct voltage (as programmed in the Diamond Logic® Builder software).
11. Verify that the red “Rear Alert” indicator light in the switch pack comes on and an audible alarm sounds.

Note: This feature uses body controller-based software controls which can be diagnosed with Navistar’s Diamond Logic® Builder software (see local dealer if not owned).

References:
Refer to the applicable International® Circuit Diagrams and Service Manuals

24.2. 60AJD: BDY INTG, INDICATOR LIGHTS (2) One for Boom Out of Stow, One for Outriggers Deployed, Includes Audible Alarm and Interlock to Parking Brake, Programmable Mode for Various Switch Actions (requires 2 RPM inputs).

Feature Applicability to Vehicle Platforms:

- Heavy Vocational (HV)
- Medium Vocational (MV)
- Heavy Extreme (HX) 2021 and Newer

Extended Description: This feature provides a custom alarm package designed for the Utility Application. It provides both an audible and visual alarm for Boom Out of Stow and Outriggers Not Stowed. Red indicator lights are in viewing area of the driver in the switch pack. Audible alarm provides a second level of warning to the driver to indicate the status of these two equipment options. Indicator lights are ON constant when either the boom or outrigger inputs are active with the park brake set. If the park brake is released, with either input active, the respective indicator shall flash at 0.6-second intervals, accompanied by an audible alarm.

System Block Diagram:

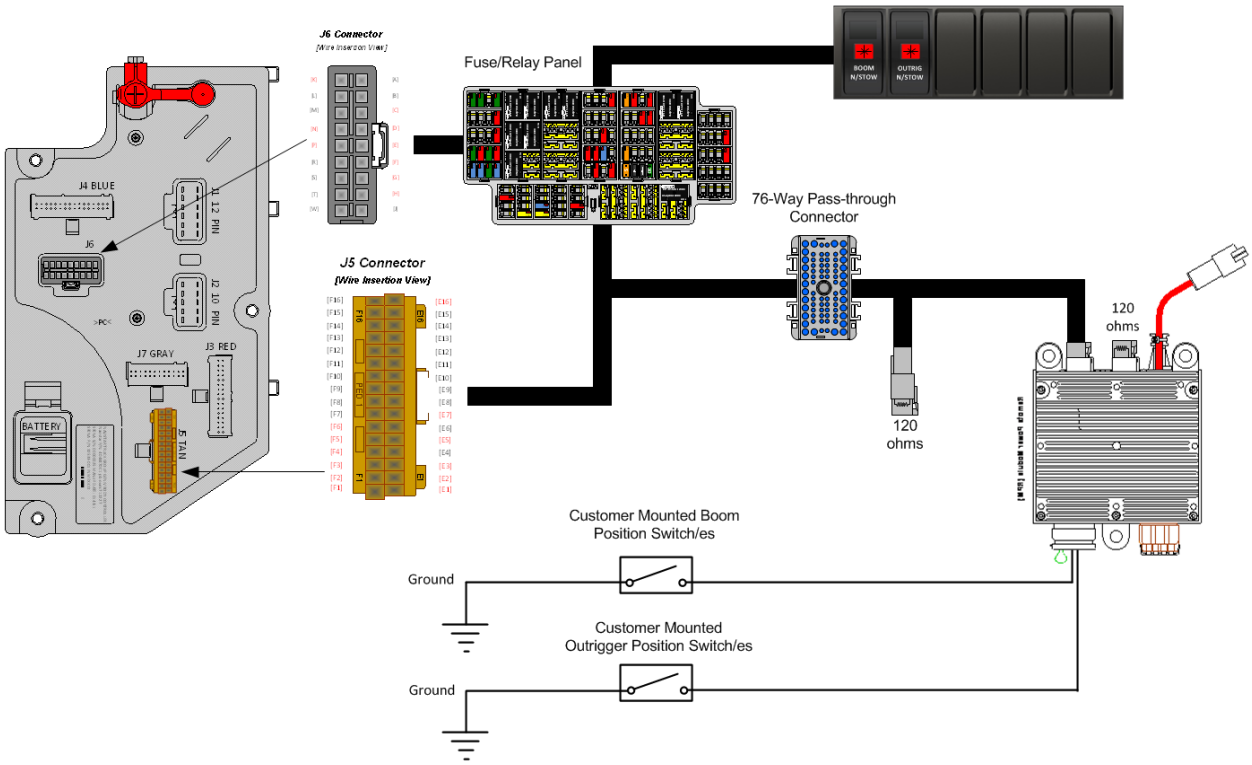

Body Controller Software Feature Codes:

- 597343 - BCM PROG, OUTRIGGER WARN Light and Buzzer
- 597344 - BCM PROG, AERIAL BOOM WARN Light and Buzzer

Body Controller Software Feature Code Parameters:

Parameter	ID	Description	Default	Units	Min	Max	Step
597343 - BCM PROG, OUTRIGGER WARN Light and Buzzer							
TEM_Outrig_Deploy_ Alarm_Inhibit	2074	If this parameter is set, the audible alarm for the outriggers deployed warning light will be inhibited.	0	No Units	0	1	1
TEM_Consol_Outrig_ Deployed_Param	2151	Active state on the RPM input for the outriggers deployed warning light. 0 = Open, 1 = GND, 3 = 12V	1	No Units	0	3	1
597344 - BCM PROG, AERIAL BOOM WARN Light and Buzzer							
TEM_Boom_Not_Sto wed_Alarm_Inhibit	2061	If this parameter is set, the audible alarm for the boom-not-stowed warning light will be inhibited.	0	No Units	0	1	1
TEM_Consol_Boom_ Not_Stow_Param	2150	Active state for the RPM input connected to the Boom switch(es) 0 = Open, 1 = GND, 3 = 12V	1	No Units	0	3	1

Parameter Definitions:

- **597343 - BCM PROG, OUTRIGGER WARN Light and Buzzer**
- **TEM_Outrig_Deploy_Alarm_Inhibit** – This parameter allows control of the outrigger audible alarm. When this parameter is ON the audible alarm only will be disabled. The default is OFF.
- **TEM_Consol_Outrig_Deployed_Param** – This parameter sets the active state of the Remote Power Module (RPM) input connected to the customer installed outrigger switch. This active state indicates when the outriggers are down:
  - 0 = Input active when open circuit
  - 1 = Input active when grounded
  - 2 = not used
  - 3 = Input active when at 12V

- **597344 - BCM PROG, AERIAL BOOM WARN Light and Buzzer**
- **TEM_Boom_Not_Stowed_Alarm_Inhibit** – This parameter allows control of the boom-not-stowed audible alarm. When this parameter is ON the audible alarm only will be disabled. The default is OFF.
- **TEM_Consol_Boom_Not_Stow_Param** – This parameter sets the active state of the Remote Power Module (RPM) input connected to the customer installed boom-stow switch. This active state indicates when the Boom is out of stow:
  - 0 = Input active when open circuit
  - 1 = Input active when grounded
  - 2 = not used
  - 3 = Input active when at 12V

Parts Associated with This Feature:

PART NUMBER	DESCRIPTION
3766358C1	LIGHT, INDICATOR, BOOM UP
3766359C1	LIGHT, INDICATOR, OUTRIG OUT
1698937C1	23-WAY RPM INPUT CONNECTOR TERMINAL (18-GUAGE)

Indicator Lights and Input Terminal part numbers.

How to Test This Feature:
1. Set the park brake.
2. Take boom out of stow.
3. Verify that the RPM input labeled Boom_Not_Stow_Input is receiving the correct active state voltage (as programmed in the Diamond Logic® Builder software).
4. Verify that the boom up indicator light is on constantly.
5. Take off the parking brake (with boom still out of stow).
6. Verify that the boom up indicator light is now flashing, and the audible alarm is sounding.
7. Set park brake and put boom back in stow.
8. Put outriggers down.
9. Verify that the RPM input labeled Outrig_Not_Stow_Input is receiving the correct active state voltage (as programmed or the Diamond Logic® Builder software).
10. Verify that the outrigger out indicator light is on constantly.
11. Take off the parking brake (with outriggers still down).
12. Verify that the outrigger out indicator light is now flashing and the audible alarm is sounding.

Note: This feature uses body controller-based software controls which can be diagnosed with Navistar's Diamond Logic® Builder software (see local dealer if not owned).

References:
Refer to the applicable International® Circuit Diagrams and Service Manuals

24.3. 60AJK: INDICATOR LIGHTS (2), One for Body Up, One for Gate Open, Includes Audible Alarm, Programmable Mode for Various Switch Actions (Requires 2-RPM Inputs).

Feature Applicability to Vehicle Platforms:

- Heavy Vocational (HV)
- Medium Vocational (MV)
- Heavy Extreme (HX) 2021 and Newer

Extended Description: This feature provides the operator of Dump Box Applications with visual and audible warning indications for a raised dump box body and open dump gate using Body Builder-installed switches. The visual indications that are provided for this feature are a “Body Up” light and a “Gate Open” light. Green indicator lights are located in a prime viewing area of the driver in the switch pack. Audible alarm provides a second level of warning to the driver to indicate the status of these two equipment options.

The “Gate Open” indicator light is on constant when the gate open input is active with the park brake set. If the park brake is released, with the gate open input active, the gate open indicator shall flash at 0.6 second intervals, accompanied by an audible alarm. Flexibility is provided through programmable parameters to establish whether the inputs are active high (12V) or active low (GND). See the Diamond Logic® Builder software to set programmable parameters.

For both the “BODY UP” and “GATE OPEN” indications, the associated light will illuminate continuously, and the associated audible alarm (default off) will sound when the corresponding input has entered an active state on the condition that the park brake is set, and the vehicle speed is less than or equal to 10-MPH.

For both the “BODY UP” and “GATE OPEN” indications, the associated light will illuminate in a slow flashing manner and the associated audible alarm (default of five fast beeps) will sound when the corresponding input is in an active state and either the park brake has been released or the vehicle speed has exceeded 10-MPH.

Both the “BODY UP” and “GATE OPEN” lights will be off when the RPM input is inactive.

System Block Diagram:

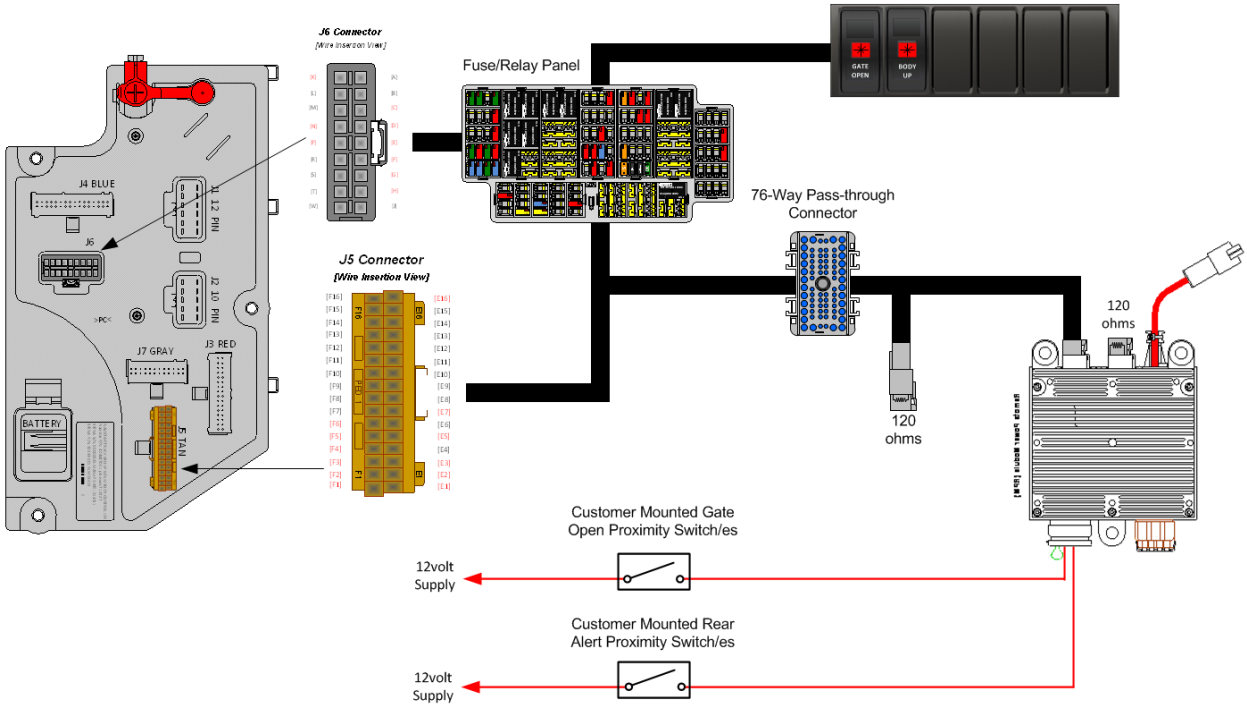

Body Controller Software Feature Codes:

- 597337 - BCM PROG, DUMP BODY UP WARN LT & BUZZ
- 597342 - BCM PROG, TAILGATE OPEN WARN LT & BUZZ

Body Controller Software Feature Code Parameters:

Parameter	ID	Description	Default	Units	Min	Max	Step
597337 - BCM PROG, DUMP BODY UP WARN LT & BUZZ							
TEM_Body_Up_Alarm_Beeper	2259	Allows the selection of one of four beeper cadences 0 = Off, 1 = 5 fast beeps, 2 = 3 slow beeps, 3 = continuous beeps	1	No Units	0	3	1
TEM_Body_Up_Beeper	2260	Allows the selection of one of four beeper cadences 0 = Off, 1 = 5 fast beeps, 2 = 3 slow beeps, 3 = continuous beeps	0	No Units	0	3	1
TEM_Body_Up_Input_Active_State	2261	This parameter selects the active state of the BODY UP RPM input. 0 = Open, 1 = GND, 3 = 12 Volts	3	No Units	0	3	1
597342 - BCM PROG, TAILGATE OPEN WARN LT & BUZZ							
TEM_Tail_Gate_Input_Active_State	2160	This parameter is used to set the voltage level that indicates when	3	No Units	0	3	1

		the tail gate alert should be active. 0 = Open, 1 = GND, 3 = 12V					
TEM_Gate_Alarm_Beeper	2262	Allows the selection of one of four beeper cadences 0 = Off, 1 = 5 fast beeps, 2 = 3 slow beeps, 3 = continuous beeps	1	No Units	0	3	1
TEM_Gate_Open_Beeper	2263	Allows the selection of one of four beeper cadences 0 = Off, 1 = 5 fast beeps, 2 = 3 slow beeps, 3 = continuous beeps	0	No Units	0	3	1

Parameter Definitions:

- **597337 - BCM PROG, DUMP BODY UP WARN LT & BUZZ**
- **TEM_Body_UP_Alarm_Beeper** – This parameter allows the customer to set the alarm type for the condition when the dump body has been raised (active) and either the park brake has been released, or the vehicle speed has exceeded 10 MPH. The default alarm type is five fast beeps.
- **TEM_Body_UP_Beeper** - This parameter allows the customer to set the alarm type for the condition when the dump body has been raised (active) and both the park brake is set, and the vehicle speed is equal to or less than 10 MPH. The default alarm type is OFF.
- **TEM_Body_UP_Input_Active_State** - This parameter indicates the state that the Body Controller (BCM) will read as active for the customer-installed switch for the dump body up function (as it goes into the Remote Power Module (RPM) input). This active state will be used to tell the BCM when the dump body has been raised up:
  - 0 = Input active when open circuit
  - 1 = Input active when grounded
  - 2 = not used
  - 3 = Input active when at 12V

- **597342 - BCM PROG, TAILGATE OPEN WARN LT & BUZZ**
- **TEM_Tail_Gate_Input_Active_State** - This parameter indicates the state that the Body Controller (BCM) will read as active for the customer-installed switch for the dump gate open function (as it goes into the Remote Power Module (RPM) input). This active state will be used to tell the BCM when the dump gate has been opened:
  - 0 = Input active when open circuit
  - 1 = Input active when grounded
  - 2 = not used
  - 3 = Input active when at 12V
- **TEM_Gate_Alarm_Beeper** – parameter allows the customer to set the alarm type for the condition when the dump gate has been opened (active) and either

the park brake has been released, or the vehicle speed has exceeded 10 MPH. The default alarm type is five fast beeps.

- **TEM_Gate_Open_Beeper** - This parameter allows the customer to set the alarm type for the condition when the dump gate has been opened (active) and both the park brake is set, and the vehicle speed is equal to or less than 10 MPH. The default alarm type is OFF.

Note/s About Possible Software Feature Conflicts:
597341 and 597342 are mutually exclusive

Parts Associated with This Feature:

PART NUMBER	PART DESCRIPTION
3766360C1	LIGHT, INDICATOR, BODY UP
3766361C1	LIGHT, INDICATOR, GATE OPEN
1698937C1	23-WAY RPM INPUT CONNECTOR TERMINAL (18-GUAGE)

Parts needed for Dump Box Indicator Lights

How to Test This Feature:
1. Set park brake.
2. Open the tailgate.
3. Verify that the input labeled TEM_Tail_Gate_Input_Active_State input is receiving the correct voltage (as programmed in the Diamond Logic® Builder software).
4. Verify that the Red “Gate Open” indicator light in the switch pack comes on.
5. Release park brake.
6. Verify that indicator light flashes and audible alarm sounds and works according to the set programmable parameters seen above.
7. Close tailgate.
8. Reset park brake.
9. Raise the body.
10. Verify that the input labeled TEM_Body_Up_Input_Active_State is receiving the correct voltage (as
programmed in the Diamond Logic® Builder software).
11. Verify that the red “Body Up” indicator light in the switch pack comes on, and an audible alarm sounds.
12. Reset park brake.

Note: This feature uses body controller-based software controls which can be diagnosed with Navistar’s Diamond Logic® Builder software (see local dealer if not owned).

References:
Refer to the applicable International® Circuit Diagrams and Service Manuals

24.4. 60AKY: BDY INTG, DASH IND LT TRICOLOR (1) for Optional Usage Customer to Program.

Feature Applicability to Vehicle Platforms:

- Heavy Vocational (HV)
- Medium Vocational (MV)
- Heavy Extreme (HX) 2021 and Newer

Extended Description: 60AKY includes one dash mounted tricolor indicator light located in one of the switch locations in the center panel switch housings for use with advanced logic. Each tricolor indicator light includes three base colors, and the light is located in the center of the switch location used. Each tricolor indicator light color can be programmed in advanced logic through the use of the Diamond Logic® Builder software to illuminate up to seven different colors. The available colors include Red, Green, Blue, Cyan, Yellow, Magenta and White. Each tricolor indicator light includes a "windowed" location over the center of the switch location used to allow custom labeling of the indicator light function. An example of an indicator light is shown below.

System Block Diagram:

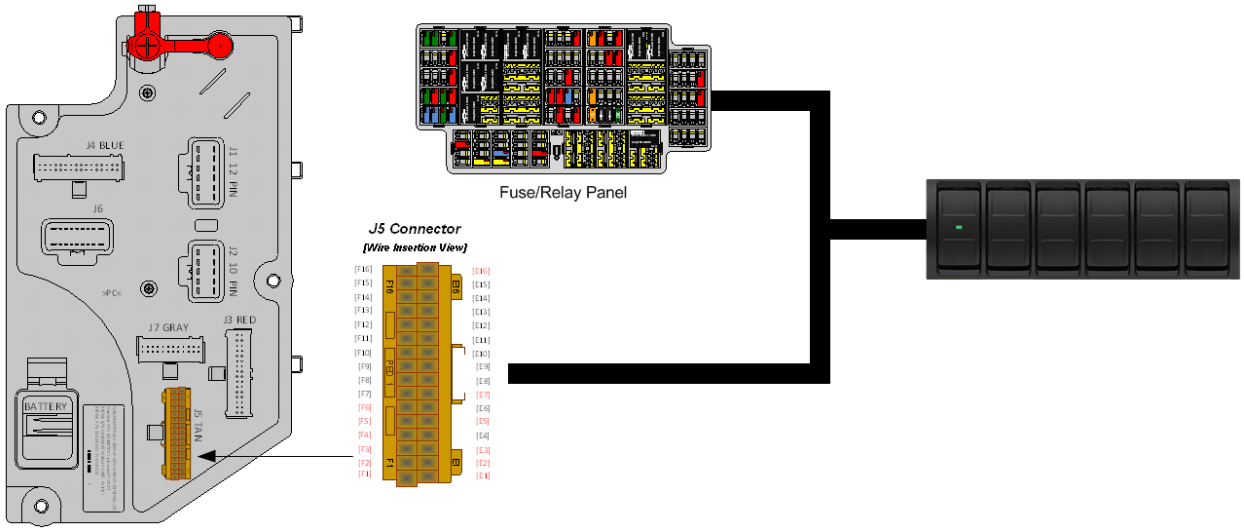

Parts Associated with This Feature:

PART NUMBER	DESCRIPTION
4057689C2	HOUSING, SWITCH, 6 PACK DIN MULTIPLEX
4108104C1	6-PACK WINDOWED LIGHT INDICATOR BLANK
3766052C1	6-PACK PLUG

Parts needed for IP Indicator lights and RPM inputs

How to Test This Feature:

1. Create Advanced Logic in Diamond Logic® Builder to turn each light ON using RPM inputs for each light to be tested.
2. Use indicator lights as outputs.
3. Apply template to vehicle.
4. Program the vehicle with the template created.
5. Turn on RPM inputs as needed and check indicator lights.

Note: This feature uses body controller-based software controls which can be diagnosed with Navistar's Diamond Logic® Builder software (see local dealer if not owned).

References:
Refer to the applicable International® Circuit Diagrams and Service Manuals

24.5. 60AKZ: BDY INTG, DASH IND LT TRICOLOR (2) for Optional Usage Customer to Program.

Feature Applicability to Vehicle Platforms:

- Heavy Vocational (HV)
- Medium Vocational (MV)
- Heavy Extreme (HX) 2021 and Newer

Extended Description: 60AKZ includes two dash mounted tricolor indicator lights located in switch locations in the center panel switch housings for use with advanced logic. Each tricolor indicator light includes three base colors, and the light is located in the center of the switch location used. Each tricolor indicator light color can be programmed in advanced logic through the use of the Diamond Logic® Builder software to illuminate up to seven different colors. The available colors include Red, Green, Blue, Cyan, Yellow, Magenta and White. Each tricolor indicator light includes a “windowed” location over the center of the switch location used to allow custom labeling of the indicator light function. An example of an indicator light is shown below.

System Block Diagram:

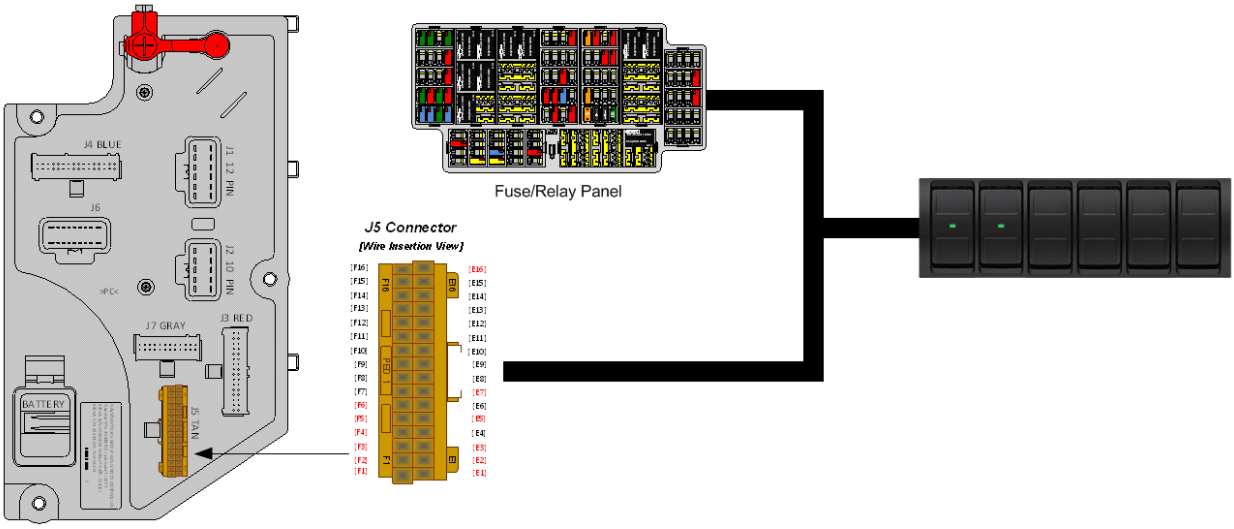

Parts Associated with This Feature:

PART NUMBER	DESCRIPTION
4057689C2	HOUSING, SWITCH, 6 PACK DIN MULTIPLEX
4108104C1	6-PACK WINDOWED LIGHT INDICATOR BLANK
3766052C1	6-PACK PLUG

Parts needed for IP Indicator lights and RPM inputs

How to Test This Feature:
1. Create Advanced Logic in Diamond Logic® Builder to turn each light ON using RPM inputs for each light to be tested.
2. Use indicator lights as outputs.
3. Apply template to vehicle.
4. Program the vehicle with the template created.
5. Turn on RPM inputs as needed and check indicator lights.

Note: This feature uses body controller-based software controls which can be diagnosed with Navistar's Diamond Logic® Builder software (see local dealer if not owned).

References:
Refer to the applicable International® Circuit Diagrams and Service Manuals

24.6. 60ALA: BDY INTG, DASH IND LT TRICOLOR (3) for Optional Usage Customer to Program.

Feature Applicability to Vehicle Platforms:

- Heavy Vocational (HV)
- Medium Vocational (MV)
- Heavy Extreme (HX) 2021 and Newer

Extended Description: 60ALA includes three dash mounted tricolor indicator lights located in switch locations in the center panel switch housings for use with advanced logic. Each tricolor indicator light includes three base colors, and the light is located in the center of the switch location used. Each tricolor indicator light color can be programmed in advanced logic through the use of the Diamond Logic® Builder software to illuminate up to seven different colors. The available colors include Red, Green, Blue, Cyan, Yellow, Magenta and White. Each tricolor indicator light includes a “windowed” location over the center of the switch location used to allow custom labeling of the indicator light function. An example of an indicator light is shown below.

System Block Diagram:

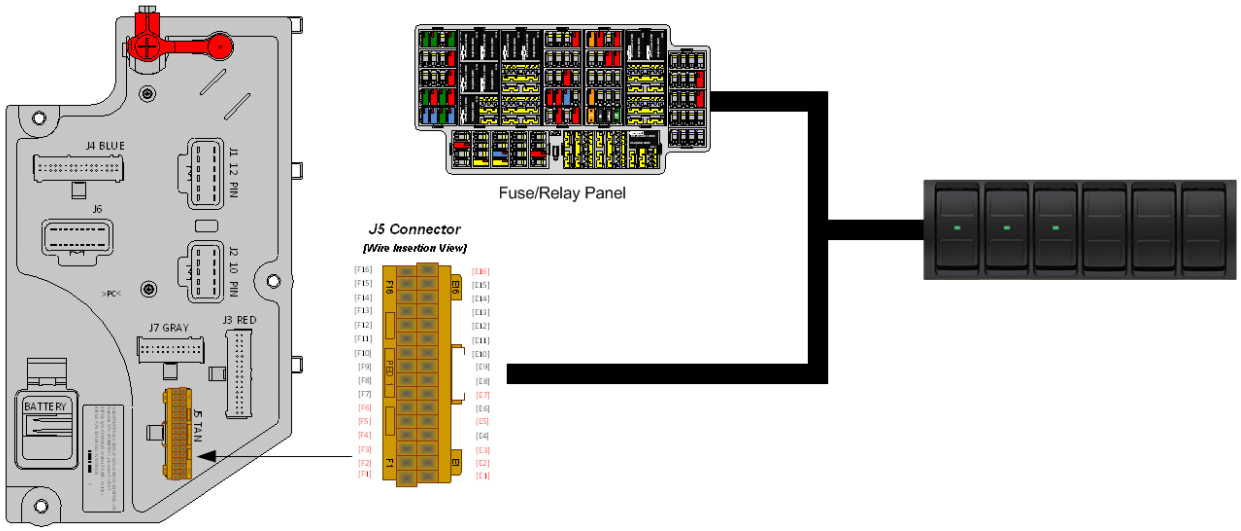

Parts Associated with This Feature:

PART NUMBER	DESCRIPTION
4057689C2	HOUSING, SWITCH, 6 PACK DIN MULTIPLEX
4108104C1	6-PACK WINDOWED LIGHT INDICATOR BLANK
3766052C1	6-PACK PLUG

Parts needed for IP Indicator lights and RPM inputs

How to Test This Feature:
1. Create Advanced Logic in Diamond Logic® Builder to turn each light ON using RPM inputs for each light to be tested.
2. Use indicator lights as outputs.
3. Apply template to vehicle.
4. Program the vehicle with the template created.
5. Turn on RPM inputs as needed and check indicator lights.

Note: This feature uses body controller-based software controls which can be diagnosed with Navistar's Diamond Logic® Builder software (see local dealer if not owned).

References:
Refer to the applicable International® Circuit Diagrams and Service Manuals

24.7. 60ALB: BDY INTG, DASH IND LT TRICOLOR (4) for Optional Usage Customer to Program.

Feature Applicability to Vehicle Platforms:

- Heavy Vocational (HV)
- Medium Vocational (MV)
- Heavy Extreme (HX) 2021 and Newer

Extended Description: 60ALB includes four dash mounted tricolor indicator lights located in switch locations in the center panel switch housings for use with advanced logic. Each tricolor indicator light includes three base colors, and the light is located in the center of the switch location used. Each tricolor indicator light color can be programmed in advanced logic through the use of the Diamond Logic® Builder software to illuminate up to seven different colors. The available colors include Red, Green, Blue, Cyan, Yellow, Magenta and White. Each tricolor indicator light includes a “windowed” location over the center of the switch location used to allow custom labeling of the indicator light function. An example of an indicator light is shown below.

System Block Diagram:

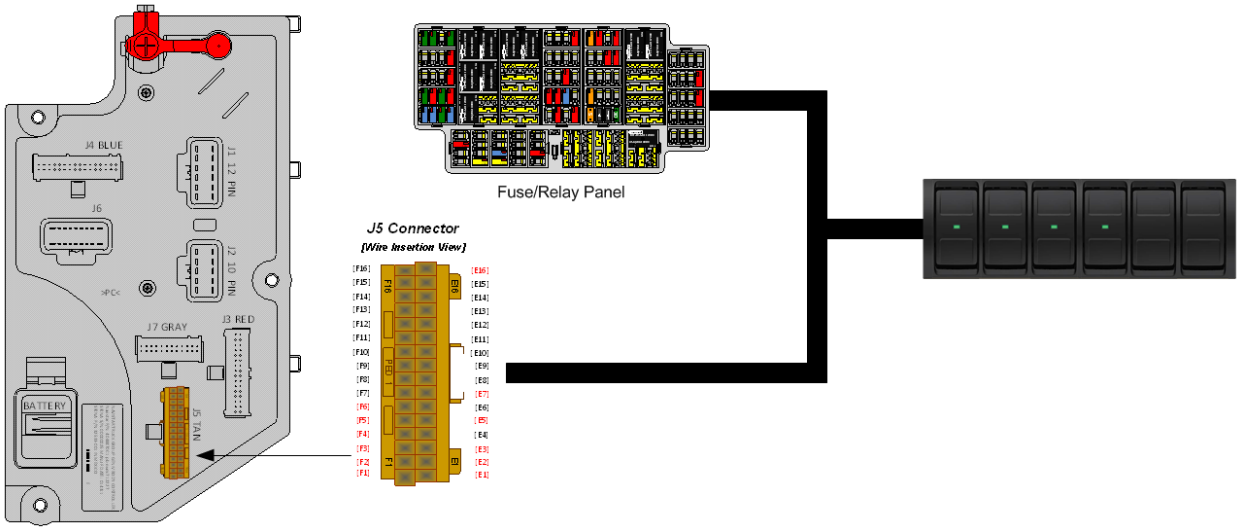

Parts Associated with This Feature:

PART NUMBER	DESCRIPTION
4057689C2	HOUSING, SWITCH, 6 PACK DIN MULTIPLEX
4108104C1	6-PACK WINDOWED LIGHT INDICATOR BLANK
3766052C1	6-PACK PLUG

Parts needed for IP Indicator lights and RPM inputs

How to Test This Feature:
1. Create Advanced Logic in Diamond Logic® Builder to turn each light ON using RPM inputs for each light to be tested.
2. Use indicator lights as outputs.
3. Apply template to vehicle.
4. Program the vehicle with the template created.
5. Turn on RPM inputs as needed and check indicator lights.

Note: This feature uses body controller-based software controls which can be diagnosed with Navistar's Diamond Logic® Builder software (see local dealer if not owned).

References:
Refer to the applicable International® Circuit Diagrams and Service Manuals

24.8. 60ALC: BDY INTG, DASH IND LT TRICOLOR (5) for Optional Usage Customer to Program.

Feature Applicability to Vehicle Platforms:

- Heavy Vocational (HV)
- Medium Vocational (MV)
- Heavy Extreme (HX) 2021 and Newer

Extended Description: 60ALC includes five dash mounted tricolor indicator lights located in switch locations in the center panel switch housings for use with advanced logic. Each tricolor indicator light includes three base colors, and the light is located in the center of the switch location used. Each tricolor indicator light color can be programmed in advanced logic through the use of the Diamond Logic® Builder software to illuminate up to seven different colors. The available colors include Red, Green, Blue, Cyan, Yellow, Magenta and White. Each tricolor indicator light includes a “windowed” location over the center of the switch location used to allow custom labeling of the indicator light function. An example of an indicator light is shown below.

System Block Diagram:

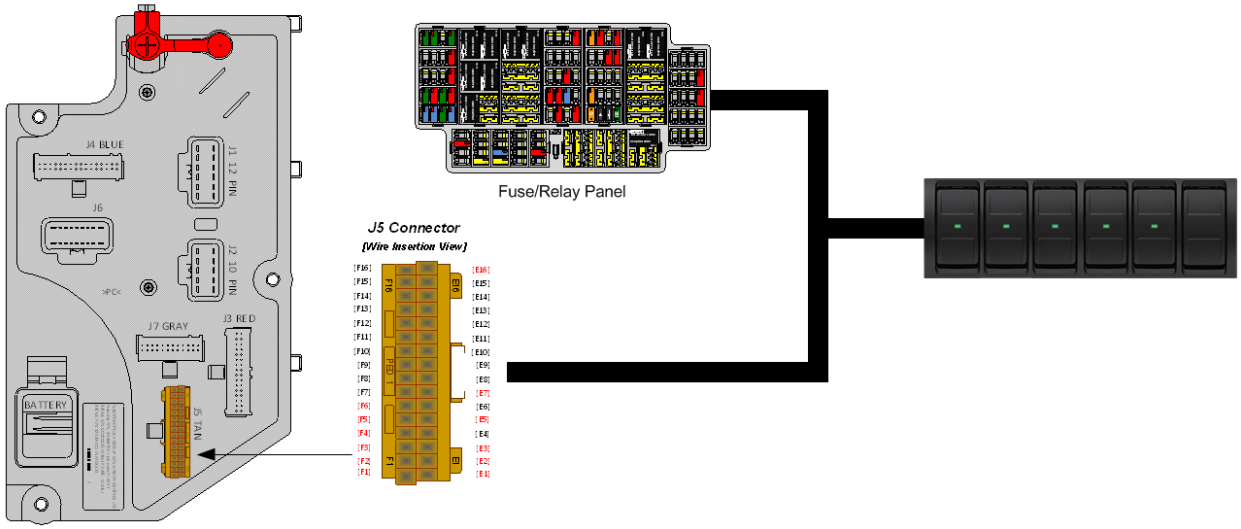

Parts Associated with This Feature:

PART NUMBER	DESCRIPTION
4057689C2	HOUSING, SWITCH, 6 PACK DIN MULTIPLEX
4108104C1	6-PACK WINDOWED LIGHT INDICATOR BLANK
3766052C1	6-PACK PLUG

Parts needed for IP Indicator lights and RPM inputs

How to Test This Feature:
1. Create Advanced Logic in Diamond Logic® Builder to turn each light ON using RPM inputs for each light to be tested.
2. Use indicator lights as outputs.
3. Apply template to vehicle.
4. Program the vehicle with the template created.
5. Turn on RPM inputs as needed and check indicator lights.

Note: This feature uses body controller-based software controls which can be diagnosed with Navistar's Diamond Logic® Builder software (see local dealer if not owned).

References:
Refer to the applicable International® Circuit Diagrams and Service Manuals

24.9. 60ALD: BDY INTG, DASH IND LT TRICOLOR (6) for Optional Usage Customer to Program.

Feature Applicability to Vehicle Platforms:

- Heavy Vocational (HV)
- Medium Vocational (MV)
- Heavy Extreme (HX) 2021 and Newer

Extended Description: 60ALD includes six dash mounted tricolor indicator lights located in switch locations in the center panel switch housings for use with advanced logic. Each tricolor indicator light includes three base colors, and the light is located in the center of the switch location used. Each tricolor indicator light color can be programmed in advanced logic through the use of the Diamond Logic® Builder software to illuminate up to seven different colors. The available colors include Red, Green, Blue, Cyan, Yellow, Magenta and White. Each tricolor indicator light includes a “windowed” location over the center of the switch location used to allow custom labeling of the indicator light function. An example of an indicator light is shown below.

System Block Diagram:

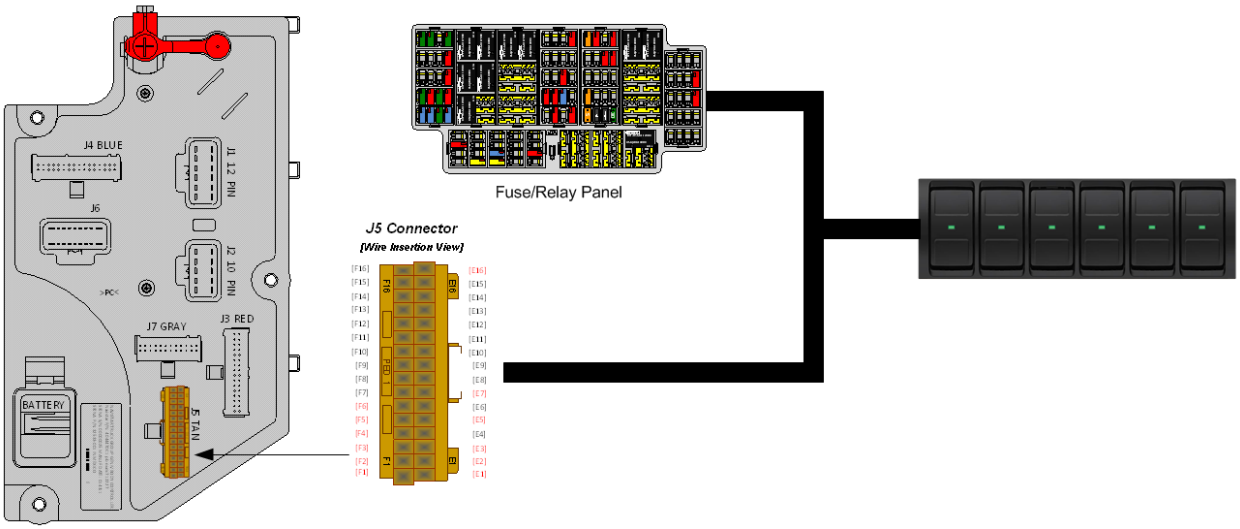

Parts Associated with This Feature:

PART NUMBER	DESCRIPTION
4057689C2	HOUSING, SWITCH, 6 PACK DIN MULTIPLEX
4108104C1	6-PACK WINDOWED LIGHT INDICATOR BLANK

Parts needed for IP Indicator lights and RPM inputs

How to Test This Feature:
1. Create Advanced Logic in Diamond Logic® Builder to turn each light ON using RPM inputs for each light to be tested.
2. Use indicator lights as outputs.
3. Apply template to vehicle.
4. Program the vehicle with the template created.
5. Turn on RPM inputs as needed and check indicator lights.

Note: This feature uses body controller-based software controls which can be diagnosed with Navistar's Diamond Logic® Builder software (see local dealer if not owned).

References:
Refer to the applicable International® Circuit Diagrams and Service Manuals

24.10. 60ALE: BDY INTG, DASH IND LT TRICOLOR (7) for Optional Usage Customer to Program.

Feature Applicability to Vehicle Platforms:

- Heavy Extreme (HX) 2021 and Newer

Extended Description: 60ALE includes seven dash mounted tricolor indicator lights located in switch locations in the center panel switch housings for use with advanced logic. Each tricolor indicator light includes three base colors, and the light is located in the center of the switch location used. Each tricolor indicator light color can be programmed in advanced logic through the use of the Diamond Logic® Builder software to illuminate up to seven different colors. The available colors include Red, Green, Blue, Cyan, Yellow, Magenta and White. Each tricolor indicator light includes a “windowed” location over the center of the switch location used to allow custom labeling of the indicator light function. An example of an indicator light is shown below.

System Block Diagram:

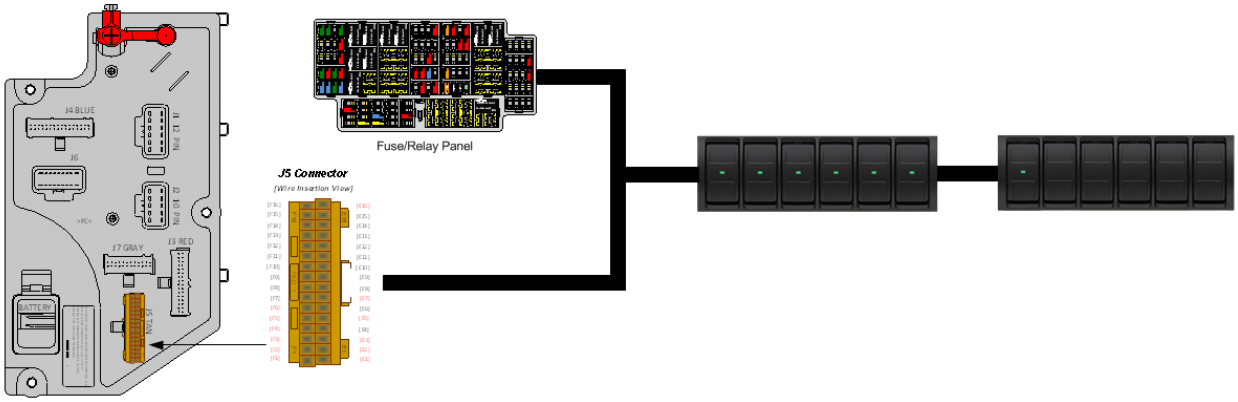

Parts Associated with This Feature:

PART NUMBER	DESCRIPTION
4057689C2	HOUSING, SWITCH, 6 PACK DIN MULTIPLEX
4108104C1	6-PACK WINDOWED LIGHT INDICATOR BLANK
3766052C1	6-PACK PLUG

Parts needed for IP Indicator lights and RPM inputs

How to Test This Feature:

1. Create Advanced Logic in Diamond Logic® Builder to turn each light ON using RPM inputs for each light to be tested.
2. Use indicator lights as outputs.
3. Apply template to vehicle.
4. Program the vehicle with the template created.
5. Turn on RPM inputs as needed and check indicator lights.

Note: This feature uses body controller-based software controls which can be diagnosed with Navistar's Diamond Logic® Builder software (see local dealer if not owned).

References:
Refer to the applicable International® Circuit Diagrams and Service Manuals

24.11. 60ALG: BDY INTG, DASH IND LT TRICOLOR (8) for Optional Usage Customer to Program.

Feature Applicability to Vehicle Platforms:

- Heavy Extreme (HX) 2021 and Newer

Extended Description: 60ALG includes eight dash mounted tricolor indicator lights located in switch locations in the center panel switch housings for use with advanced logic. Each tricolor indicator light includes three base colors, and the light is located in the center of the switch location used. Each tricolor indicator light color can be programmed in advanced logic through the use of the Diamond Logic® Builder software to illuminate up to seven different colors. The available colors include Red, Green, Blue, Cyan, Yellow, Magenta and White. Each tricolor indicator light includes a “windowed” location over the center of the switch location used to allow custom labeling of the indicator light function. An example of an indicator light is shown below.

System Block Diagram:

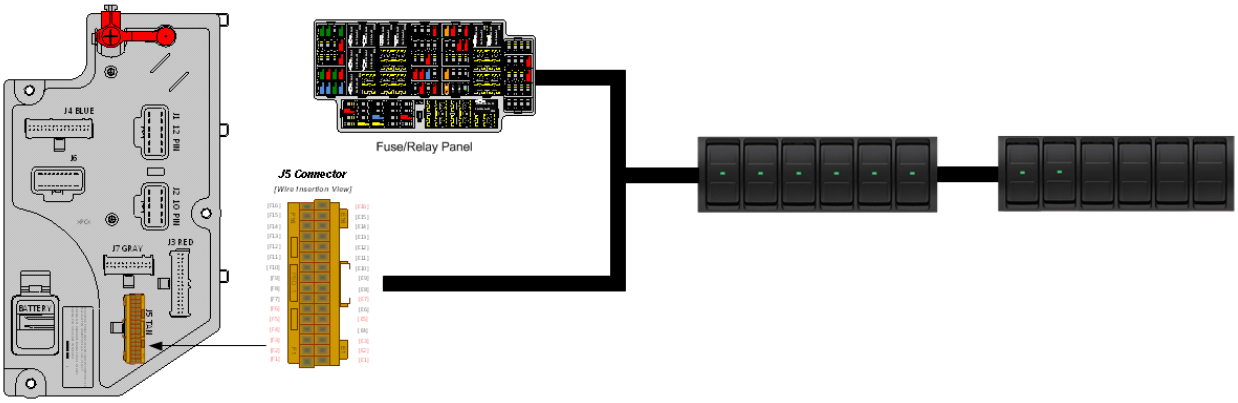

Parts Associated with This Feature:

PART NUMBER	DESCRIPTION
4057689C2	HOUSING, SWITCH, 6 PACK DIN MULTIPLEX
4108104C1	6-PACK WINDOWED LIGHT INDICATOR BLANK
3766052C1	6-PACK PLUG

Parts needed for IP Indicator lights and RPM inputs

How to Test This Feature:
1. Create Advanced Logic in Diamond Logic® Builder to turn each light ON using RPM inputs for each light to be tested.
2. Use indicator lights as outputs.
3. Apply template to vehicle.
4. Program the vehicle with the template created.
5. Turn on RPM inputs as needed and check indicator lights.

Note: This feature uses body controller-based software controls which can be diagnosed with Navistar's Diamond Logic® Builder software (see local dealer if not owned).

References:
Refer to the applicable International® Circuit Diagrams and Service Manuals

24.12. 60ALH: BDY INTG, DASH IND LT TRICOLOR (9) for Optional Usage Customer to Program.

Feature Applicability to Vehicle Platforms:

- Heavy Extreme (HX) 2021 and Newer

Extended Description: 60ALH includes nine dash mounted tricolor indicator lights located in switch locations in the center panel switch housings for use with advanced logic. Each tricolor indicator light includes three base colors, and the light is located in the center of the switch location used. Each tricolor indicator light color can be programmed in advanced logic through the use of the Diamond Logic® Builder software to illuminate up to seven different colors. The available colors include Red, Green, Blue, Cyan, Yellow, Magenta and White. Each tricolor indicator light includes a “windowed” location over the center of the switch location used to allow custom labeling of the indicator light function. An example of an indicator light is shown below.

System Block Diagram:

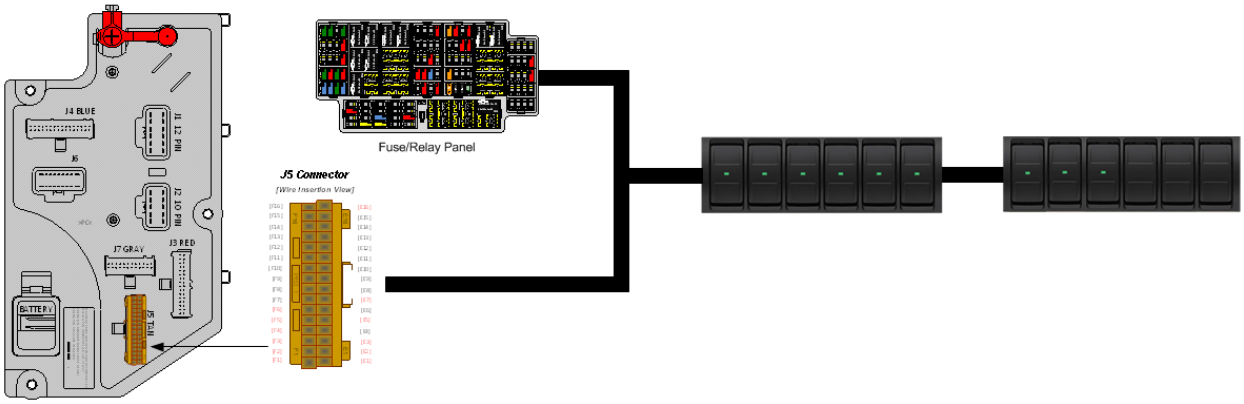

Parts Associated with This Feature:

PART NUMBER	DESCRIPTION
4057689C2	HOUSING, SWITCH, 6 PACK DIN MULTIPLEX
4108104C1	6-PACK WINDOWED LIGHT INDICATOR BLANK
3766052C1	6-PACK PLUG

Parts needed for IP Indicator lights and RPM inputs

How to Test This Feature:
1. Create Advanced Logic in Diamond Logic® Builder to turn each light ON using RPM inputs for each light to be tested.
2. Use indicator lights as outputs.
3. Apply template to vehicle.
4. Program the vehicle with the template created.
5. Turn on RPM inputs as needed and check indicator lights.

Note: This feature uses body controller-based software controls which can be diagnosed with Navistar's Diamond Logic® Builder software (see local dealer if not owned).

References:
Refer to the applicable International® Circuit Diagrams and Service Manuals

24.13. 60ALJ: BDY INTG, DASH IND LT TRICOLOR (10) for Optional Usage Customer to Program.

Feature Applicability to Vehicle Platforms:

- Heavy Extreme (HX) 2021 and Newer

Extended Description: 60ALJ includes ten dash mounted tricolor indicator lights located in switch locations in the center panel switch housings for use with advanced logic. Each tricolor indicator light includes three base colors, and the light is located in the center of the switch location used. Each tricolor indicator light color can be programmed in advanced logic through the use of the Diamond Logic® Builder software to illuminate up to seven different colors. The available colors include Red, Green, Blue, Cyan, Yellow, Magenta and White. Each tricolor indicator light includes a “windowed” location over the center of the switch location used to allow custom labeling of the indicator light function. An example of an indicator light is shown below.

System Block Diagram:

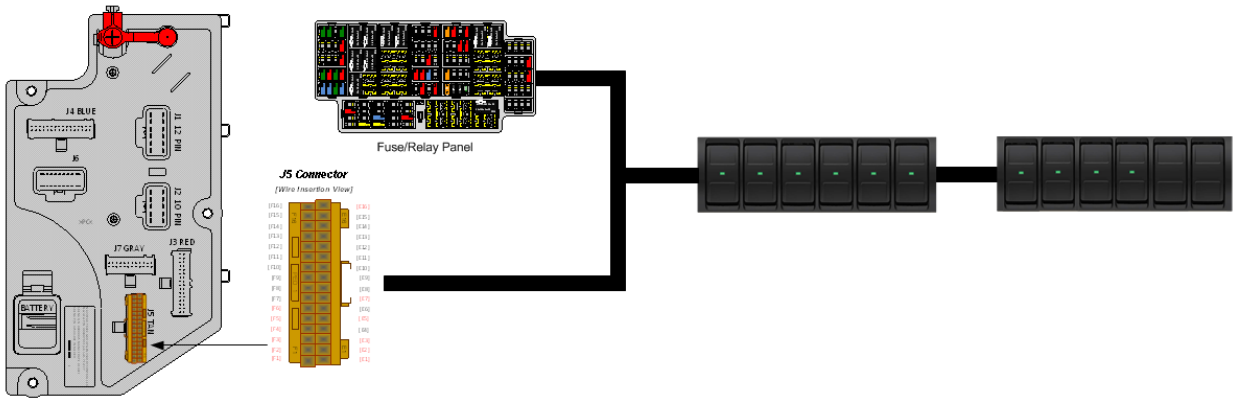

Parts Associated with This Feature:

PART NUMBER	DESCRIPTION
4057689C2	HOUSING, SWITCH, 6 PACK DIN MULTIPLEX
4108104C1	6-PACK WINDOWED LIGHT INDICATOR BLANK
3766052C1	6-PACK PLUG

Parts needed for IP Indicator lights and RPM inputs

How to Test This Feature:
1. Create Advanced Logic in Diamond Logic® Builder to turn each light ON using RPM inputs for each light to be tested.
2. Use indicator lights as outputs.
3. Apply template to vehicle.
4. Program the vehicle with the template created.
5. Turn on RPM inputs as needed and check indicator lights.

Note: This feature uses body controller-based software controls which can be diagnosed with Navistar's Diamond Logic® Builder software (see local dealer if not owned).

References:
Refer to the applicable International® Circuit Diagrams and Service Manuals

24.14. 60ALK: BDY INTG, DASH IND LT TRICOLOR (11) for Optional Usage Customer to Program.

Feature Applicability to Vehicle Platforms:

- Heavy Extreme (HX) 2021 and Newer

Extended Description: 60ALK includes eleven dash mounted tricolor indicator lights located in switch locations in the center panel switch housings for use with advanced logic. Each tricolor indicator light includes three base colors, and the light is located in the center of the switch location used. Each tricolor indicator light color can be programmed in advanced logic through the use of the Diamond Logic® Builder software to illuminate up to seven different colors. The available colors include Red, Green, Blue, Cyan, Yellow, Magenta and White. Each tricolor indicator light includes a “windowed” location over the center of the switch location used to allow custom labeling of the indicator light function. An example of an indicator light is shown below.

System Block Diagram:

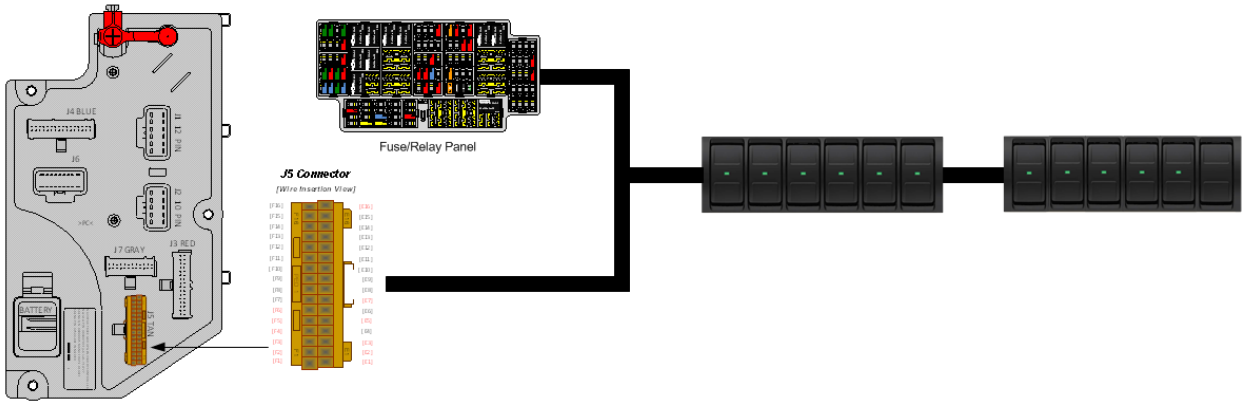

Parts Associated with This Feature:

PART NUMBER	DESCRIPTION
4057689C2	HOUSING, SWITCH, 6 PACK DIN MULTIPLEX
4108104C1	6-PACK WINDOWED LIGHT INDICATOR BLANK
3766052C1	6-PACK PLUG

Parts needed for IP Indicator lights and RPM inputs

How to Test This Feature:
1. Create Advanced Logic in Diamond Logic® Builder to turn each light ON using RPM inputs for each light to be tested.
2. Use indicator lights as outputs.
3. Apply template to vehicle.
4. Program the vehicle with the template created.
5. Turn on RPM inputs as needed and check indicator lights.

Note: This feature uses body controller-based software controls which can be diagnosed with Navistar's Diamond Logic® Builder software (see local dealer if not owned).

References:
Refer to the applicable International® Circuit Diagrams and Service Manuals

24.15. 60ALL: BDY INTG, DASH IND LT TRICOLOR (12) for Optional Usage Customer to Program.

Feature Applicability to Vehicle Platforms:

- Heavy Extreme (HX) 2021 and Newer

Extended Description: 60ALL includes twelve dash mounted tricolor indicator lights located in switch locations in the center panel switch housings for use with advanced logic. Each tricolor indicator light includes three base colors, and the light is located in the center of the switch location used. Each tricolor indicator light color can be programmed in advanced logic through the use of the Diamond Logic® Builder software to illuminate up to seven different colors. The available colors include Red, Green, Blue, Cyan, Yellow, Magenta and White. Each tricolor indicator light includes a “windowed” location over the center of the switch location used to allow custom labeling of the indicator light function. An example of an indicator light is shown below.

System Block Diagram:

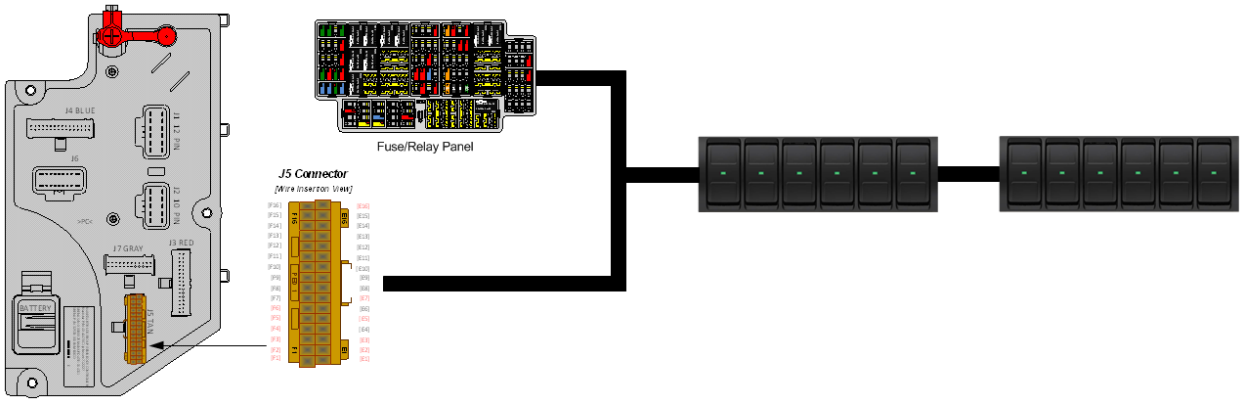

Parts Associated with This Feature:

PART NUMBER	DESCRIPTION
4057689C2	HOUSING, SWITCH, 6 PACK DIN MULTIPLEX
4108104C1	6-PACK WINDOWED LIGHT INDICATOR BLANK

Parts needed for IP Indicator lights and RPM inputs

How to Test This Feature:
1. Create Advanced Logic in Diamond Logic® Builder to turn each light ON using RPM inputs for each light to be tested.
2. Use indicator lights as outputs.
3. Apply template to vehicle.
4. Program the vehicle with the template created.
5. Turn on RPM inputs as needed and check indicator lights.

Note: This feature uses body controller-based software controls which can be diagnosed with Navistar's Diamond Logic® Builder software (see local dealer if not owned).

References:
Refer to the applicable International® Circuit Diagrams and Service Manuals.

25. Liftgate Accommodation Packages

25.1. 08VBA: POWER SOURCE, SPECIAL for Customer Installed Lift Gate; 200 Amp Max, Includes 00ga. Power Cable to End of Frame, Optional Power (PDM) for Power Source, Latched Switch on Instrument Panel, with a Time Out Feature, Battery Discharge Protection, Controlling a Mag Switch Which Provides Power.

Feature Applicability to Vehicle Platforms:
- Medium Vocational (MV)
- Heavy Vocational (HV)
- Regional Haul (RH)

Extended Description: 08VBA includes a 15-foot power cable coiled at the end of the frame to provide power for operating a lift gate. This feature is battery fed through a chassis Power Distribution Module (PDM) The feature includes a 200-Amp circuit breaker located in the chassis PDM.

When the lift gate is requested via the dash switch or the Remote Keyless Entry, it sends a signal to the BCM over the 125K J1939 communication network. The BCM processes the lift gate enable request when interlocks such as battery voltage, vehicle speed, and lift gate enable timer are met. The BCM activates lift gate contactor solenoid, which then sends voltage to the lift gate. This feature provides battery protection with visual and audible indication to the operator that the BCM will deactivate the lift gate output to prevent excessive discharge of the batteries.

Lift gate contactor internal solenoid is energized by the Body Control Module (BCM) with input from the lift gate switch. After contactor solenoid is energized, an optional Chassis PDM supplies voltage to lift gate contactor which then outputs voltage for

raising and lowering lift gate. If vehicle is not equipped with optional Chassis PDM, vehicle batteries supply voltage to lift gate contactor.

System Block Diagram:

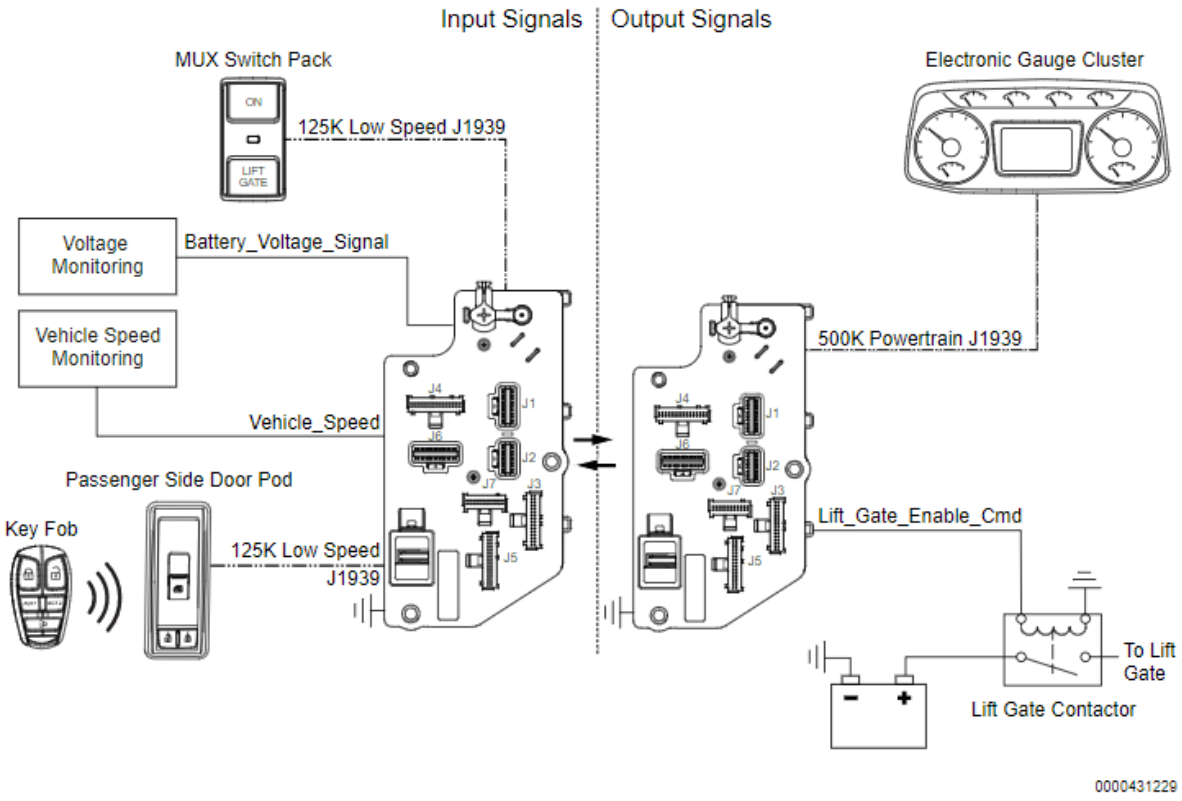

Body Controller Software Feature Codes: (Feature code and description goes below)

- 597309 - BCM PROG, LIFT GATE WIRING PAK Rocker Position with a Time Out Feature, Battery Discharge Protection

Body Controller Software Feature Code Parameters:

Parameter	ID	Description	Default	Units	Min	Max	Step
Lift_Gate_Enable_OC_Current	2232	Lift Gate Enable Open Circuit Detection Level (Amps)	0	A	0	10	0.1
Lift_Gate_Enable_Lo_Current	2233	Lift Gate Enable Low Current Detection Level (Amps)	0	A	0	10	0.1
Lift_Gate_Enable_Hi_Current	2234	Lift Gate Enable High Current Detection Level (Amps)	10	A	0	10	0.1
Lift_Gate_Enable_Timeout	2235	This signal is a parameter that can be adjusted to vary the amount of time, in 10-minute increments, that the lift gate will remain enabled. If this value is set to 60, the lift gate will remain enabled for 60 minutes from the time that it is enabled.	60	min	10	240	10
Lift_Gate_Disable_Threshold	2239	Voltage level where the Lift Gate will be disabled...	12	Volts	11.5	13.8	0.1

Lift_Gate_Alarm _Time	2249	Lift Gate Alarm time value	60	s	1	120	1

Parameter Definitions:

- **Lift_Gate_Enable_OC_Current**- If the current in the lift gate circuit falls below the level set by this parameter, the Body Controller (BCM) will shut off the circuit and register a fault code.

- **Lift_Gate_Enable_Lo_Current**- If the current in the lift gate circuit falls below the level set by this parameter, the Body Controller (BCM) will register a fault code.

- **Lift_Gate_Enable_Hi_Current**- If the current in the lift gate circuit exceeds the level set by this parameter, the Body Controller (BCM) will shut off the circuit and register a fault code.

- **Lift_Gate_Enable_Timeout** – This parameter can be adjusted to vary the amount of time, in 10-minute increments, that the lift gate will remain enabled. If this value is set to 60, the lift gate will remain enabled for 60 minutes from the time that it is enabled.

- **Lift_Gate_Disable_Threshold** – This parameter is used to determine the low vehicle voltage at which the lift gate will be disabled.

- **Lift_Gate_Alarm_Time** – This parameter determines how long the lift gate alarm will sound once it is activated.

25.2. 08TWG: POWER SOURCE, SPECIAL {Erich Jaeger} Socket, Single Terminal, for Power Lift Gate Feed, Battery Feed Thru 150 Amp Circuit Breaker, To Operate Lift Gate On Trailer, Includes a 15’ Power Cable Coiled In Cab

Feature Applicability to Vehicle Platforms:

- Medium Vocational (MV)

Extended Description: 08WCM includes a 15-foot power cable coiled in the cab to provide power for operating a lift gate. This feature is battery fed through a chassis Power Distribution Module (PDM) located Back of Cab (BOC) on the passenger side frame rail. The feature includes a 150-Amp circuit breaker located in the chassis PDM.

System Block Diagram:

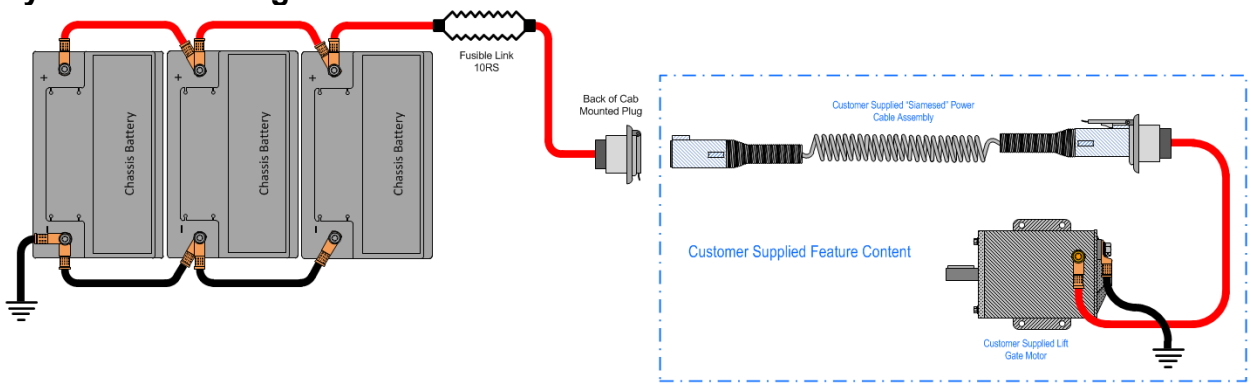

Parts Associated with This Feature:

PART NUMBER	QTY	DESCRIPTION
3513393C91	1	SOCKET, TRAILER W/CABLE, TRAILER LIFT GATE 1-WAY PHILLIPS
577313C1	3	INSULATOR, TERMINAL, ELECTRICAL MOLDED INSULATOR EYELET TERMI
R016501015	1	CABLE, BATTERY, BATTERY CABLE-1 GAUGE
4087558R1	0.2	FLUID, LUBRICANT,
1675921C92	1	BREAKER, CIRCUIT, CIRCUIT 150-AMP
31047R1	2	BOLT, HEX FLG HD M6 X 25
30325R1	2	WASHER, 6.4MM ID, 12.5MM OD, 2MM THICK, B-ZND
933833R1	2	WASHER, SPLIT LOCK, M6, STL, ZN6A
40209R1	2	NUT, M6, FLANGED LOCK, PHC
3534419C91	1	CABLE, ASM, LIFTGATE SINGLE POLE COILED CABLE 15FT

Lift Power Wiring Part Numbers

How to Test This Feature:

1. The body builder or lift gate installer must bring the batteries up to a full charge before trying to test the system for functionality.
2. With the batteries at a full charge, voltage in the 12.6 to 12.9 range and the lift gate power controlled by the Battery Protection System, the system will operate as described in the above section.

References:

Refer to the applicable International® Circuit Diagrams and Service Manuals.

25.3. 08TWJ: POWER SOURCE, SPECIAL {Erich Jaeger} Socket, Dual Pole Terminal, for Power Lift Gate Feed, Battery Feed Thru 150 Amp Circuit Breaker, To Operate Lift Gate On Trailer, Includes a 15’ Coiled Dual Pole Power Cable Shipped in Cab

Feature Applicability to Vehicle Platforms:

- Heavy Vocational (HV)
- Line Haul Transport (LT)
- Medium Vocational (MV)
- Regional Haul (RH)

Extended Description: 08WCM includes a 15-foot power cable coiled in the cab to provide power for operating a lift gate. This feature is battery fed through a chassis Power Distribution Module (PDM) located Back of Cab (BOC) on the passenger side frame rail. The feature includes a 150-Amp circuit breaker located in the chassis PDM.

System Block Diagram:

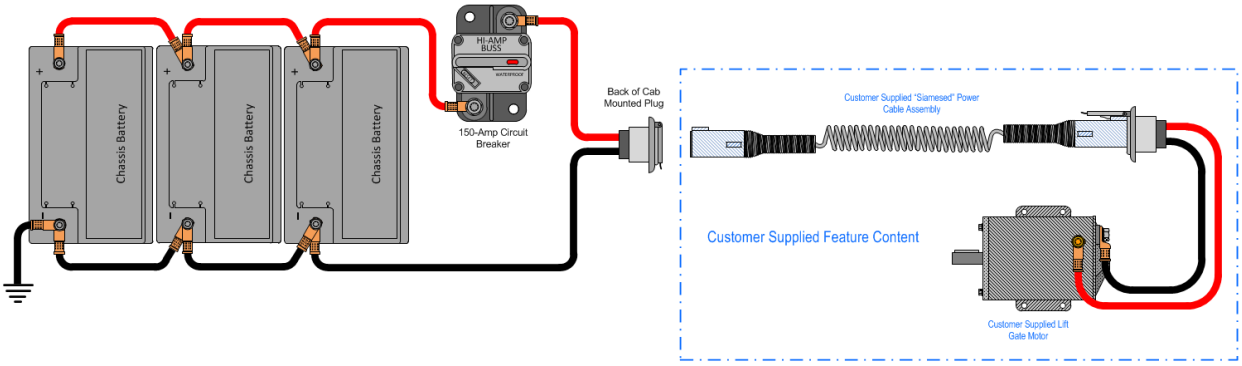

Parts Associated with This Feature:

PART NUMBER	QTY	DESCRIPTION
3513393C91	1	SOCKET, TRAILER W/CABLE, TRAILER LIFT GATE 1-WAY PHILLIPS
577313C1	3	INSULATOR, TERMINAL, ELECTRICAL MOLDED INSULATOR EYELET TERMI
R016501015	1	CABLE, BATTERY, BATTERY CABLE-1 GAUGE
4087558R1	0.2	FLUID, LUBRICANT,
1675921C92	1	BREAKER, CIRCUIT, CIRCUIT 150-AMP
31047R1	2	BOLT, HEX FLG HD M6 X 25
30325R1	2	WASHER, 6.4MM ID, 12.5MM OD, 2MM THICK, B-ZND
933833R1	2	WASHER, SPLIT LOCK, M6, STL, ZN6A
40209R1	2	NUT, M6, FLANGED LOCK, PHC
3534419C91	1	CABLE, ASM, LIFTGATE SINGLE POLE COILED CABLE 15FT

Lift Power Wiring Part Numbers

How to Test This Feature:
1. The body builder or lift gate installer must bring the batteries up to a full charge before trying to test the system for functionality.
2. With the batteries at a full charge, voltage in the 12.6 to 12.9 range and the lift gate power controlled by the Battery Protection System, the system will operate as described in the above section.

References:
Refer to the applicable International® Circuit Diagrams and Service Manuals.

25.4. 08WCM: POWER SOURCE, Special Socket; Single Terminal, for Power Lift Gate Feed, Battery Feed Thru 150-Amp Circuit Breaker, To Operate Lift Gate on Trailer, includes a 15-foot Power Cable Coiled in Cab.

Feature Applicability to Vehicle Platforms:
- Heavy Vocational (HV)
- Line Haul Transport (LT)
- Medium Vocational (MV)
- Regional Haul (RH)

Extended Description: 08WCM includes a 15-foot power cable coiled in the cab to provide power for operating a lift gate. This feature is battery fed through a chassis Power Distribution Module (PDM) located Back of Cab (BOC) on the passenger side frame rail. The feature includes a 150-Amp circuit breaker located in the chassis PDM.

System Block Diagram:

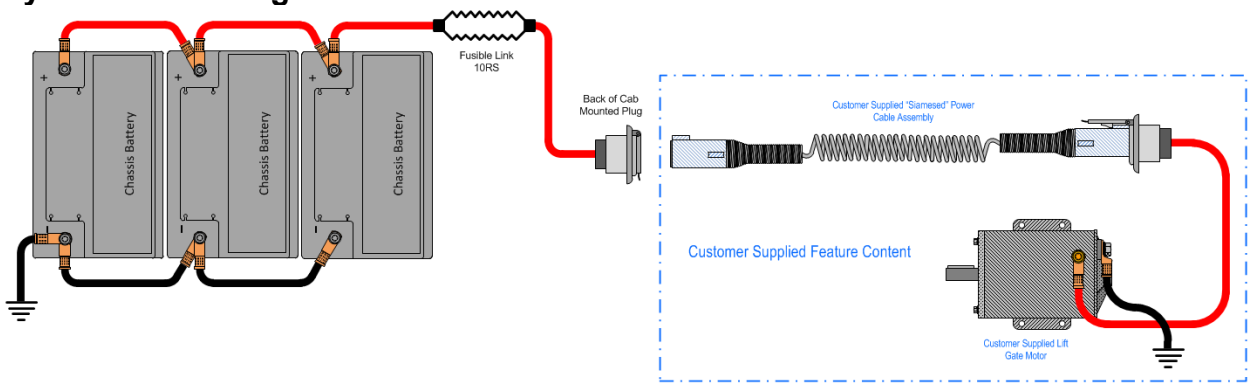

Parts Associated with This Feature:

PART NUMBER	QTY	DESCRIPTION
3513393C91	1	SOCKET, TRAILER W/CABLE, TRAILER LIFT GATE 1-WAY PHILLIPS
577313C1	3	INSULATOR, TERMINAL, ELECTRICAL MOLDED INSULATOR EYELET TERMI
R016501015	1	CABLE, BATTERY, BATTERY CABLE-1 GAUGE
4087558R1	0.2	FLUID, LUBRICANT,
1675921C92	1	BREAKER, CIRCUIT, CIRCUIT 150-AMP
31047R1	2	BOLT, HEX FLG HD M6 X 25
30325R1	2	WASHER, 6.4MM ID, 12.5MM OD, 2MM THICK, B-ZND
933833R1	2	WASHER, SPLIT LOCK, M6, STL, ZN6A
40209R1	2	NUT, M6, FLANGED LOCK, PHC
3534419C91	1	CABLE, ASM, LIFTGATE SINGLE POLE COILED CABLE 15FT

Lift Power Wiring Part Numbers

How to Test This Feature:

1. The body builder or lift gate installer must bring the batteries up to a full charge before trying to test the system for functionality.
2. With the batteries at a full charge, voltage in the 12.6 to 12.9 range and the lift gate power controlled by the Battery Protection System, the system will operate as described in the above section.

References:

Refer to the applicable International® Circuit Diagrams and Service Manuals.

25.5. 08WJA: POWER SOURCE, SPECIAL for Customer Installed Lift Gate; 200 Amp Max, Includes 2ga. Power Cable to End of Frame, Latched Switch on Instrument Panel, with a Time Out Feature, Battery Discharge Protection, Controlling a Mag Switch Which Provides Power

Feature Applicability to Vehicle Platforms:

- Medium Vocational (MV)
- Heavy Vocational (HV)

Extended Description: 08WJA includes a 15-foot power cable coiled at the end of the frame to provide power for operating a lift gate. This feature is battery fed through a chassis Power Distribution Module (PDM) The feature includes a 200-Amp circuit breaker located in the chassis PDM.

When the lift gate is requested via the dash switch or the Remote Keyless Entry, it sends a signal to the BCM over the 125K J1939 communication network. The BCM processes the lift gate enable request when interlocks such as battery voltage, vehicle speed, and lift gate enable timer are met. The BCM activates lift gate contactor solenoid, which then sends voltage to the lift gate. This feature provides battery protection with visual and audible indication to the operator that the BCM will deactivate the lift gate output to prevent excessive discharge of the batteries.

Lift gate contactor internal solenoid is energized by the Body Control Module (BCM) with input from the lift gate switch. After contactor solenoid is energized, an optional Chassis PDM supplies voltage to lift gate contactor which then outputs voltage for raising and lowering lift gate. If vehicle is not equipped with optional Chassis PDM, vehicle batteries supply voltage to lift gate contactor.

System Block Diagram:

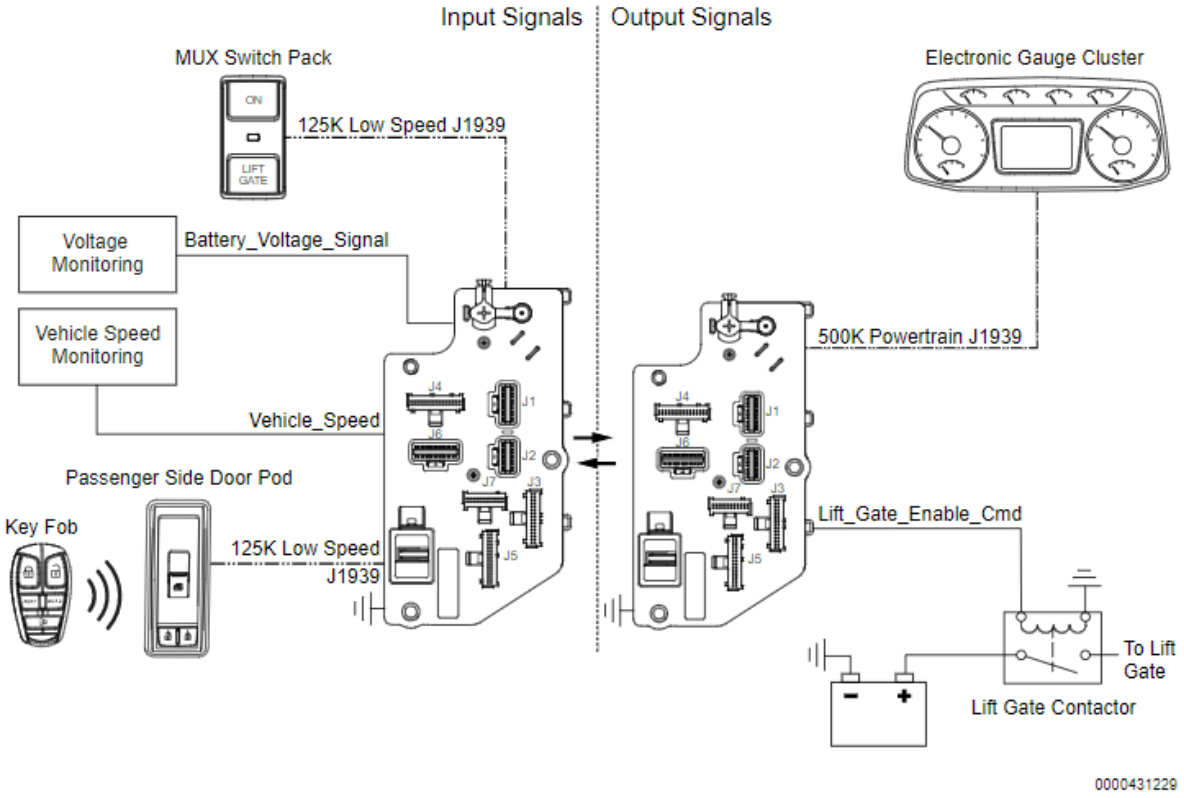

Body Controller Software Feature Codes: (Feature code and description goes below)

- 597309 - BCM PROG, LIFT GATE WIRING PAK Rocker Position with a Time Out Feature, Battery Discharge Protection

25.6. 08WJH: POWER SOURCE, SPECIAL - Special Socket; Dual Pole Terminal, for Power Lift Gate Feed, Battery Feed Thru 150-Amp Circuit Breaker to Operate Lift Gate on Trailer.

Feature Applicability to Vehicle Platforms:

- Line Haul Transport (LT)
- Medium Vocational (MV)
- Regional Haul (RH)

Extended Description: 08WJH includes a special dual pole trailer socket mounted back of cab to provide power for operating a lift gate. This feature is battery fed through a chassis Power Distribution Module (PDM) located Back of Cab (BOC) on the passenger side frame rail. The feature includes a 150-Amp circuit breaker located in the chassis PDM.

System Block Diagram:

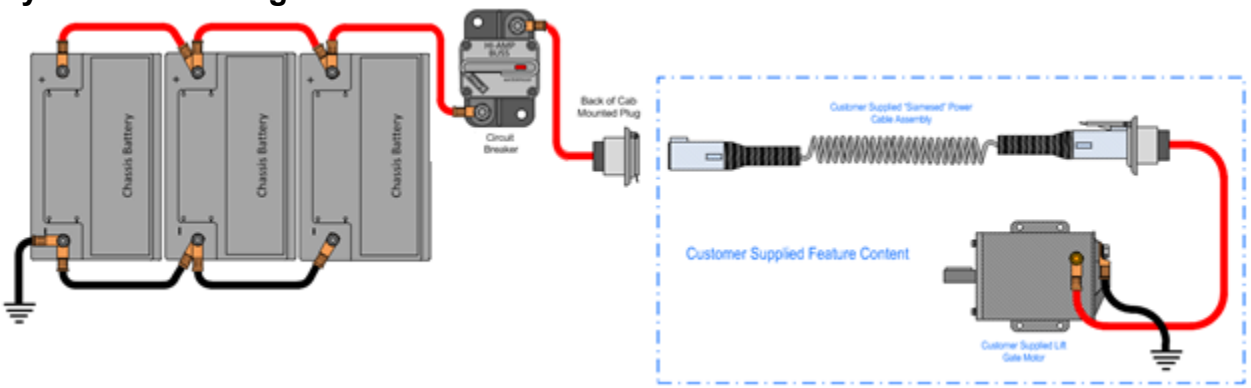

Parts Associated with This Feature:

PART NUMBER	QTY	DESCRIPTION
3604562C91	1	SOCKET, TRAILER W/CABLE, TRAILER LIFT GATE DUAL POLE PHILLIPS
577313C1	4	INSULATOR, TERMINAL, ELECTRICAL MOLDED INSULATOR EYELET TERMINAL
R016501015	1	CABLE, BATTERY, BATTERY CABLE-1 GAUGE
4087558R1	0.2	FLUID, LUBRICANT,
1675921C92	1	BREAKER, CIRCUIT, CIRCUIT 150 AMP
31047R1	2	BOLT, HEX FLG HD M6 X 25
30325R1	2	WASHER, 6.4MM ID, 12.5MM OD, 2MM THICK, B-ZND
933833R1	2	WASHER, SPLIT LOCK, M6, STL, ZN6A
40209R1	2	NUT, M6, FLANGED LOCK, PHC
RN110R1090	1	CABLE, BATTERY, POS 1 GA SGX N/SEALED
4087558R1	0.2	FLUID, LUBRICANT,
6100845C1	1	FUSE, 250 AMP, BLOCK TYPE FUSE
KX16611095	1	CABLE, BATTERY, 1 GA CAB GROUND CABLE
4087558R1	0.1	FLUID, LUBRICANT,
3687472C1	1	BAR, SINGLE FUSE HOLDER
3804604C1	2	GUIDE, BRK HOSE & CABLE, DOUBLE SWIVEL SADDLE SMALL
306132C1	4	STRAP, CABLE LOCK
306132C1	3	STRAP, CABLE LOCK

Lift Power Wiring Part Numbers

How to Test This Feature:

1. The body builder or lift gate installer must bring the batteries up to a full charge before trying to test the system for functionality.
2. With the batteries at a full charge, voltage in the 12.6 to 12.9-range and the lift gate power controlled by the Battery Protection System, the system will operate as described in the above section.

References:

Refer to the applicable International® Circuit Diagrams and Service Manuals.

25.7. 08WKP: POWER SOURCE, SPECIAL {Phillips} Socket, Dual Pole Terminal, for Power Lift Gate Feed, Battery Feed Thru 150 Amp Circuit Breaker, To Operate Lift Gate On Trailer, Includes a 15’ Coiled Dual Pole Power Cable Shipped in Cab

Feature Applicability to Vehicle Platforms:

- Line Haul Transport (LT)
- Medium Vocational (MV)
- Regional Haul (RH)

Extended Description: 08WKP includes a special dual pole trailer socket mounted back of cab to provide power for operating a lift gate. This feature is battery fed through a chassis Power Distribution Module (PDM) located Back of Cab (BOC) on the passenger side frame rail. The feature includes a 150-Amp circuit breaker located in the chassis PDM.

System Block Diagram:

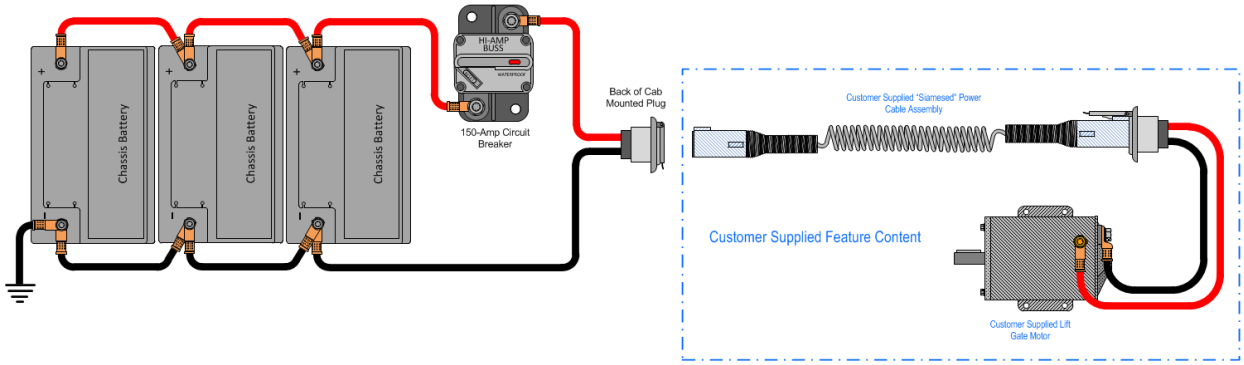

Parts Associated with This Feature:

PART NUMBER	QTY	DESCRIPTION
3604562C91	1	SOCKET, TRAILER W/CABLE, TRAILER LIFT GATE DUAL POLE PHILLIPS
577313C1	4	INSULATOR, TERMINAL, ELECTRICAL MOLDED INSULATOR EYELET TERMINAL
R016501015	1	CABLE, BATTERY, BATTERY CABLE-1 GAUGE
4087558R1	0.2	FLUID, LUBRICANT,
1675921C92	1	BREAKER, CIRCUIT, CIRCUIT 150 AMP
31047R1	2	BOLT, HEX FLG HD M6 X 25
30325R1	2	WASHER, 6.4MM ID, 12.5MM OD, 2MM THICK, B-ZND
933833R1	2	WASHER, SPLIT LOCK, M6, STL, ZN6A
40209R1	2	NUT, M6, FLANGED LOCK, PHC
RN110R1090	1	CABLE, BATTERY, POS 1 GA SGX N/SEALED
4087558R1	0.2	FLUID, LUBRICANT,
6100845C1	1	FUSE, 250 AMP, BLOCK TYPE FUSE

KX16611095	1	CABLE, BATTERY, 1 GA CAB GROUND CABLE
4087558R1	0.1	FLUID, LUBRICANT,
3687472C1	1	BAR, SINGLE FUSE HOLDER
3804604C1	2	GUIDE, BRK HOSE & CABLE, DOUBLE SWIVEL SADDLE SMALL
306132C1	4	STRAP, CABLE LOCK
306132C1	3	STRAP, CABLE LOCK

Lift Power Wiring Part Numbers

How to Test This Feature:
1. The body builder or lift gate installer must bring the batteries up to a full charge before trying to test the system for functionality.
2. With the batteries at a full charge, voltage in the 12.6 to 12.9-range and the lift gate power controlled by the Battery Protection System, the system will operate as described in the above section.

References:
Refer to the applicable International® Circuit Diagrams and Service Manuals.

25.8. 08WSS: POWER SOURCE, SPECIAL {Phillips} Socket, Dual Pole Terminal, for Power Lift Gate Feed, Battery Feed Thru 150 Amp Circuit Breaker, To Operate Lift Gate On Trailer, includes a Phillips Weather-Tite M2 12’ Straight Dual Pole Power Cable Shipped in Cab

Feature Applicability to Vehicle Platforms:
- Line Haul Transport (LT)
- Medium Vocational (MV)
- Regional Haul (RH)

Extended Description: 08WJH includes a special dual pole trailer socket mounted back of cab to provide power for operating a lift gate. This feature is battery fed through a chassis Power Distribution Module (PDM) located Back of Cab (BOC) on the passenger side frame rail. The feature includes a 150-Amp circuit breaker located in the chassis PDM.

System Block Diagram:

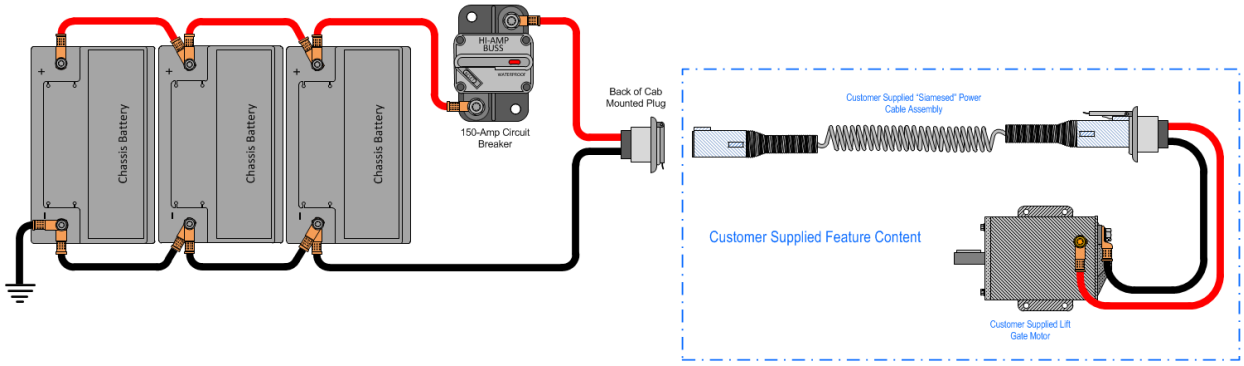

Parts Associated with This Feature:

PART NUMBER	QTY	DESCRIPTION
3604562C91	1	SOCKET, TRAILER W/CABLE, TRAILER LIFT GATE DUAL POLE PHILLIPS
577313C1	4	INSULATOR, TERMINAL, ELECTRICAL MOLDED INSULATOR EYELET TERMINAL
R016501015	1	CABLE, BATTERY, BATTERY CABLE-1 GAUGE
4087558R1	0.2	FLUID, LUBRICANT,
1675921C92	1	BREAKER, CIRCUIT, CIRCUIT 150 AMP
31047R1	2	BOLT, HEX FLG HD M6 X 25
30325R1	2	WASHER, 6.4MM ID, 12.5MM OD, 2MM THICK, B-ZND
933833R1	2	WASHER, SPLIT LOCK, M6, STL, ZN6A
40209R1	2	NUT, M6, FLANGED LOCK, PHC
RN110R1090	1	CABLE, BATTERY, POS 1 GA SGX N/SEALED
4087558R1	0.2	FLUID, LUBRICANT,
6100845C1	1	FUSE, 250 AMP, BLOCK TYPE FUSE
KX16611095	1	CABLE, BATTERY, 1 GA CAB GROUND CABLE
4087558R1	0.1	FLUID, LUBRICANT,
3687472C1	1	BAR, SINGLE FUSE HOLDER
3804604C1	2	GUIDE, BRK HOSE & CABLE, DOUBLE SWIVEL SADDLE SMALL
306132C1	4	STRAP, CABLE LOCK
306132C1	3	STRAP, CABLE LOCK

Lift Power Wiring Part Numbers

How to Test This Feature:

1. The body builder or lift gate installer must bring the batteries up to a full charge before trying to test the system for functionality.
2. With the batteries at a full charge, voltage in the 12.6 to 12.9-range and the lift gate power controlled by the Battery Protection System, the system will operate as described in the above section.

References:

Refer to the applicable International® Circuit Diagrams and Service Manuals.

26. Remote Power Module Features

Parts Associated with Remote Power Module Features:

PART NUMBER	DESCRIPTION
REMOTE POWER MODULE RELATED PARTS	
2588909C92	REMOTE POWER MODULE
3519178C91	RESISTOR, ELECT TERMINATING
RPM OUTPUT TERMINAL KITS	
2585651C91	RPM TERMINAL KIT 12-GAUGE
2585423C91	RPM TERMINAL KIT 14-GAUGE
RPM BROWN 8–WAY CONNECTOR	
3548934C1	8–WAY CONNECTOR BODY
3534163C1	12-GAUGE TERMINAL
3535931C1	14-GAUGE TERMINAL
3535930C1	16 & 18-GAUGE TERMINAL
3548945C1	12 & 14-GAUGE CABLE SEAL
3535937C1	16 & 18-GAUGE CABLE SEAL
3548943C1	CONNECTOR LOCK
3573833C1	CAP LOCK
3535938C1	CAVITY PLUG
RPM 23-WAY CONNECTOR	
3677559C1	23-WAY CONNECTOR
1698937C1	16, 18, 20-GAUGE TERMINAL
1688285C1	CAVITY PLUG
MULTIPLEX SWITCH-PACK PARTS	
4057689C1	HOUSING, SWITCH 6-PACK DIN MULTIPLEX
3766091C1	SWITCH, ELECTRONIC, BLANK WINDOW ROCKER - 3 POS - MONOSTABLE
76-WAY CONNECTOR (THERMAL PROTECTION BARRIER PASS THROUGH)	
3574285C1	76-WAY CONNECTOR WIRE TERMINAL FEMALE 14-GUAGE
3574288C1	76-WAY CONNECTOR WIRE TERMINAL FEMALE 16-GUAGE
2003343C1	76-WAY CONNECTOR WIRE TERMINAL FEMALE 18-GUAGE
3549416C1	76-WAY CONNECTOR WIRE TERMINAL MALE 14-GUAGE
3549417C1	76-WAY CONNECTOR WIRE TERMINAL MALE 16-GUAGE
35494118C1	76-WAY CONNECTOR WIRE TERMINAL MALE 18-GUAGE
BODY CONTROL MODULE J5/J6 CONNECTOR PARTS	
3522073C1	32-WAY BODY CONTROLLER J5 (1601/1602) CONNECTOR WIRE TERMINAL 18/20-GAUGE
3534303C1	32-WAY BODY CONTROLLER J5 (1601/1602) CONNECTOR WIRE TERMINAL 20/22-GAUGE
3544878C1	18-WAY BODY CONTROLLER J6 (1606/2023) CONNECTOR WIRE TERMINAL 12-14-GAUGE [GT280]

3544877C1	18-WAY BODY CONTROLLER J6 (1606/2023) CONNECTOR WIRE TERMINAL 14/16-GAUGE [GT280]
3544876C1	18-WAY BODY CONTROLLER J6 (1606/2023) CONNECTOR WIRE TERMINAL 16/18-GAUGE [GT280]
3544875C1	18-WAY BODY CONTROLLER J6 (1606/2023) CONNECTOR WIRE TERMINAL 18/20-GAUGE [GT280]
3544884C1	18-WAY BODY CONTROLLER J6 (1606/2023) CONNECTOR WIRE TERMINAL 16/18-GAUGE [GT150]
3544883C1	18-WAY BODY CONTROLLER J6 (1606/2023) CONNECTOR WIRE TERMINAL 20/22-GAUGE [GT150]

Parts Associated with Remote Power Module Features

26.1. 60ACE: BDY INTG, SWITCH DUAL OUTPUT 2-Position Latched Rocker, Backlit, with “ON” Indicator Mounted on Dash, for 1; Auxiliary Load 40-AMP Maximum; Power Available Only in “Ignition (IGN)” or “Accessory” Position; Controls Two Remote Power Modules (RPMs) (requires two RPM outputs).

Feature Applicability to Vehicle Platforms:

- Heavy Extreme (HX) 2021 and Newer

Extended Description: This feature provides one two-positioned latched rocker switch that controls one auxiliary load with a 40-AMP maximum. This feature was designed for owners who have a load that requires an RPM output of greater than 20-AMPS. Two RPM outputs are required, and power would only be available in IGN or accessory key-state.

Through programmable parameters, the amount of current desired to the two outputs can be adjusted. This allows the body builder to customize the amperage supplied to the RPM output based on their specific needs.

Please use the Diamond Logic® Builder software to determine pin locations for RPM inputs and outputs (refer to the CONNECTOR screen view) and to set programmable parameters (refer to the FEATURE screen view).

System Block Diagram:

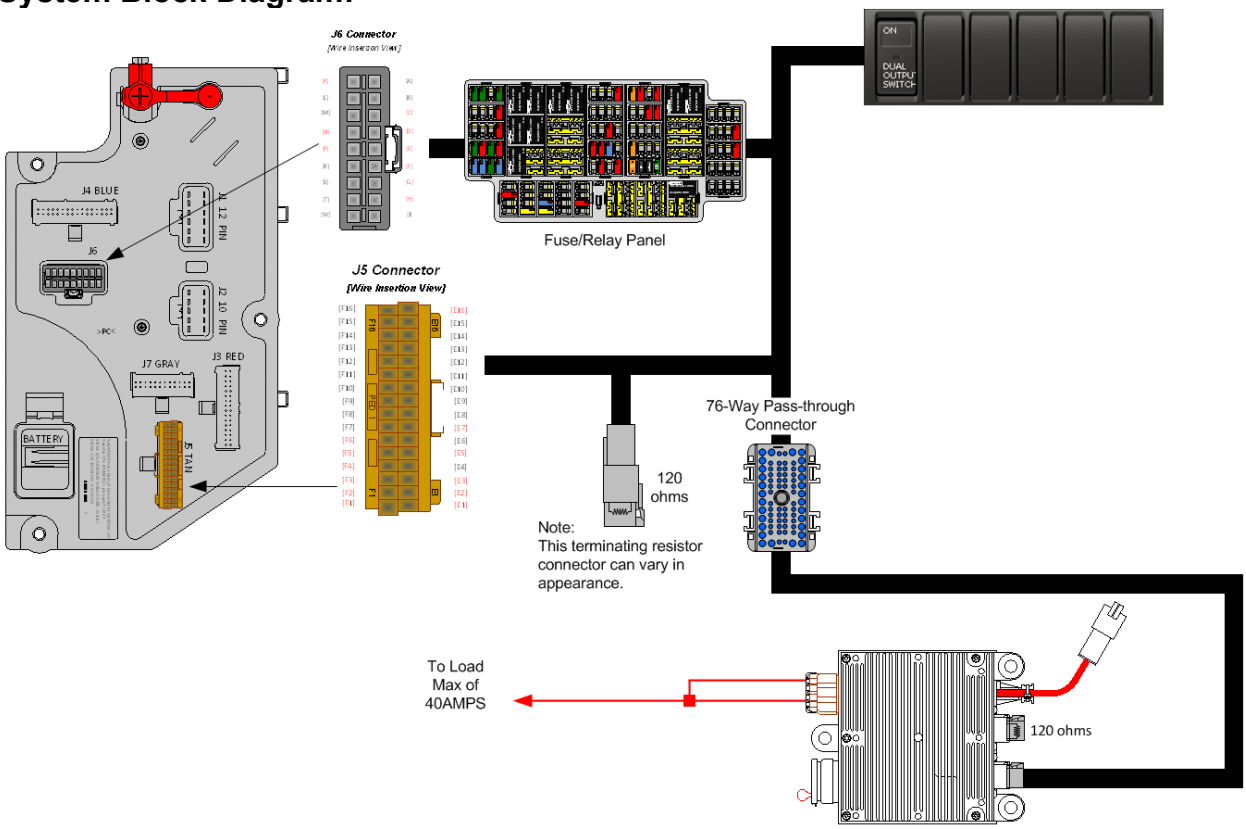

Body Controller Software Feature Codes:

- 597201 - BCM PROG, DUAL OUTPUT AUX #1
  - Remote Power Module required

Body Controller Software Feature Code Parameters:

Parameter	ID	Description	Default	Units	Min	Max	Step
TEM_Dual1_Output1_Fuse_Param	1988	This is the maximum current Dual 1 Output 1 is allowed to source before the virtual fusing turns the output off.	20	A	0	20	0.01
TEM_Dual1_Output2_Fuse_Param	1989	This is the maximum current Dual 1 Output 2 is allowed to source before the virtual fusing turns the output off.	20	A	0	20	0.01
TEM_Dual_LoadShed_Level	3351	Loadshed level parameter for TEM_Dual1_Switch	1	No Units	0	3	1

Parameter Definitions:

- **TEM_Dual1_Output1_Fuse_Param** – This parameter sets the limit (in AMPS) of the current flowing from Output #1 of Dual 1. If the current exceeds this specified amount, the virtual fusing shuts the output off.

- **TEM_Dual1_Output1_Fuse_Param** – This parameter sets the limit (in AMPS) of the current flowing from Output #2 of Dual 1. If the current exceeds this specified amount, the virtual fusing shuts the output off.
- **TEM_Dual_LoadShed_Level** – This is the level at which the Outputs for Dual 1 will load shed. A value of ZERO (0) disables load shed. A value of ONE (1) is least priority (sheds first), a value of 3 highest priority (sheds last).

Note/s About Possible Software Feature Conflicts:
597187

Parts Associated with This Feature:
See the list at the beginning of this section.

How to Test This Feature:
1. Depress the switch.
2. Verify that the desired voltage is being pulled from the RPM outputs labeled DUAL_OUTPUT_SWITCH_Output1 and DUAL_OUTPUT_SWITCH_Output2.

Note: This feature uses body controller-based software controls which can be diagnosed with Navistar's Diamond Logic® Builder software (see local dealer if not owned).

References:
Refer to the applicable International® Circuit Diagrams and Service Manuals

26.2. 60ACG: BDY INTG, SWITCH, INTERLOCKED 2-Position Latched Rocker, Backlit, with “ON” Indicator Mounted on Dash for 1; Auxiliary Load 20-Ampere (AMP) Maximum; Output will disengage when Vehicle Exceeds 30-MPH, Programmable; Power Available Only in “Ignition (IGN)” or “Accessory” Position (requires one Remote Power Module (RPM) output).

Feature Applicability to Vehicle Platforms:

- Heavy Extreme (HX) 2021 and Newer

Extended Description: Feature 60ACG provides a 2-position latched rocker switch that controls one auxiliary load of 20-Amps maximum and requires one RPM output. Output will be defaulted to turn off when vehicle speed reaches 30-MPH. The output will only be available in IGN or accessory key-state. This feature is used for applications such as a rear shining light. If the operator forgets to turn the light off before he drives away, the light will shut off when the driver hits 30-MPH.

The body builder can interlock the switch with certain programmable conditions. These conditions can be set as programmable parameters using the Diamond Logic® Builder software. These parameters are listed and explained below.

Please use the Diamond Logic® Builder software to determine pin locations for RPM inputs and outputs (refer to the CONNECTOR screen view) and to set programmable parameters (refer to the FEATURE screen view).

System Block Diagram:

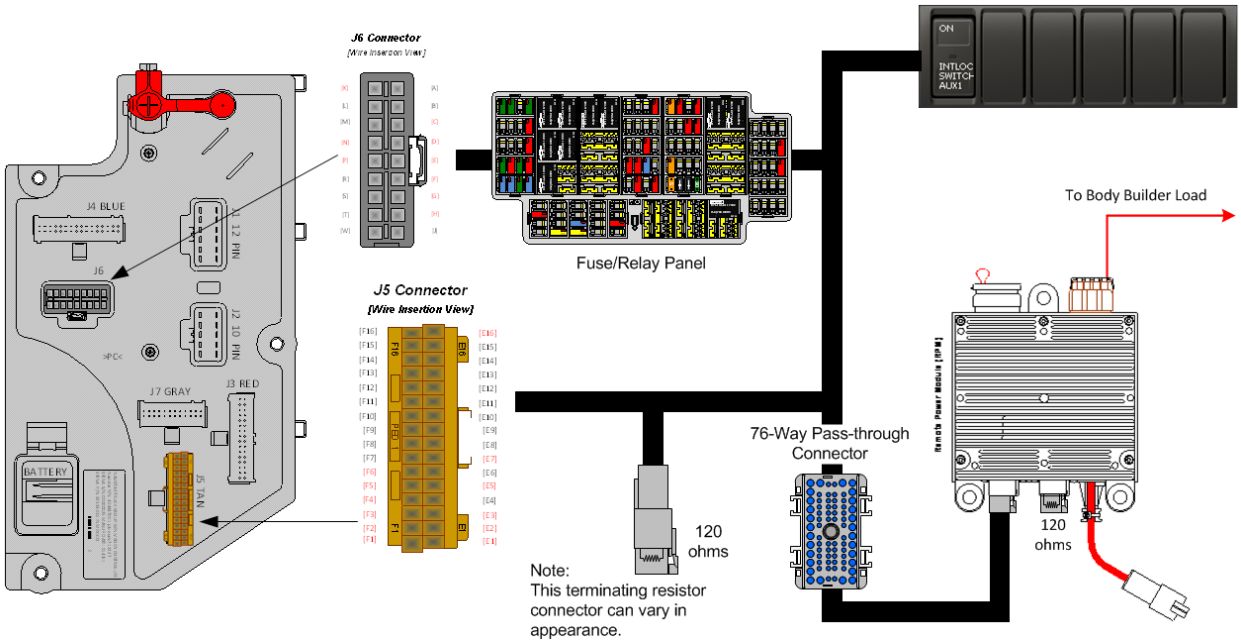

Body Controller Software Feature Codes:

- 597203 - BCM PROG, INTERLOCK AUX #1
    - Remote Power Module required

Body Controller Software Feature Code Parameters:

Parameter	ID	Description	Default	Units	Min	Max	Step
TEM_Aux1_Interlock_Latches_Off	2006	If this is set, when the output is turned off due to an interlock, it will remain off until the switch is recycled.	OFF	On/Off	n/a	n/a	n/a
TEM_Aux1_Speed_Interlock_Param	2007	The speed parameter for the TEM Aux #1 with Interlocks feature.	30	Mph	0	100	1
TEM_Aux1_Gear_Interlock_Param	2008	The transmission gear parameter for the TEM Aux #1 with Interlocks feature (124 is park, 125 is neutral, 126 is first, etc., 251 is park). The default value is 125 (neutral).	125	Number	0	250	1
TEM_Aux1_w_Ilock_Output_Fuse	2009	Fuse parameter for the TEM Single output with interlocks feature.	20	A	0	20	0.1
TEM_Aux1_Misc_Interlock_Param	2033	Miscellaneous or control parameter used for setting the interlock for the auxiliary 1 with interlocks.	10	List	n/a	n/a	n/a
TEM_Aux1_w_Int_LoadShed_Level	3345	Loadshed level parameter for TEM Aux1 with Interlocks	1	No Units	0	3	1

Parameter Definitions:

- **TEM_Aux1_Interlock_Latches_Off** – Normally, if the output is deactivated because the interlocking condition is not met, the output will re-activate as soon as the interlocking condition is re-established if the switch is still on. If this behavior is not desirable, the parameter TEM_Aux1_Interlock_Latches_Off parameter can be set. When it is set and the output is deactivated because the interlocking condition is not met, the output will not reactivate when the interlocking condition is re-established even if the switch is
- **TEM_Aux1_Speed_Interlock_Param** – If TEM_Aux1_Misc_Interlock_Param is set to 9 or 10, the speed-interlock parameter (TEM_Aux1_Speed_Interlock_Param) must also be set. This parameter must be set to the actual speed to use in the condition selected by TEM_Aux1_Misc_Interlock_Param (default unit for this parameter is MPH). The speed parameter is only used if TEM_Aux1_Misc_Interlock_Param is set to 9 or 10.

  Example: If you want the output to only come on when the vehicle is traveling over 15 MPH, you would set TEM_Aux1_Misc_Interlock_Param to 9 and set TEM_Aux1_Speed_Interlock_Param to 15 MPH.
- **TEM_Aux1_Gear_Interlock_Param** – If TEM_Aux1_Misc_Interlock_Param is set to 13 or 14 and the vehicle has an automatic transmission, the gear-interlock

parameter (TEM_Aux1_Gear_Interlock_Param) must also be set. This parameter must be set to the transmission gear to use in the condition selected by TEM_Aux1_Misc_Interlock_Param. The transmission gear is set as follows:

Setting	Transmission Gear
125	Transmission in Neutral
126	Transmission is in the 1st forward gear
127	Transmission is in the 2nd forward gear
128	Transmission is in the 3rd forward gear
125 + x	Transmission is in the xth forward gear
124	Transmission is in the 1st reverse gear
123	Transmission is in the 2nd reverse gear
125 – y	Transmission is in the yth reverse gear

The transmission gear parameter is only used if TEM_Aux1_Misc_Interlock_Param is set to 13 or 14.
Example: For the output to only come on when the vehicle transmission is in a reverse gear, set TEM_Aux1_Misc_Interlock_Param to 10 and TEM_Aux1_Gear_Interlock_Param to 125.

- **TEM_Aux1_w_Ilock_Output_Fuse** – This parameter sets the limit (in AMPS) of the current flowing from the output. If the current exceeds this specified amount, the virtual fusing shuts the output off.
- **TEM_Aux1_Misc_Interlock_Param** – This parameter (TEM_Aux1_Misc_Interlock_Param) is the master parameter for this feature. The setting for this parameter selects the interlocking condition for the output. The following table indicates which interlocking condition corresponds to which setting for the parameter. To select the interlocking condition simply set the value of this parameter to the corresponding setting on the table.

Setting	Interlocking Condition
0	Apply no interlocks to this output
1	Activate this output when the park brake is set AND the switch is on
2	Activate this output when the park brake is not set AND the switch is on
3	Activate this output when a door is open AND the switch is on
4	Activate this output when all doors are closed AND the switch is on
5	Activate this output when the PTO is engaged AND the switch is on (Requires a PTO feature)
6	Activate this output when the PTO is not engaged AND the switch is on (Requires a PTO feature)
7	Activate this output when the engine is running AND the switch is on
8	Activate this output when the engine is not running AND the switch is on
9	Activate this output when the vehicle speed exceeds the value set in TEM_Aux_1_Speed_Interlock_Param AND the switch is on
10	Activate this output when the vehicle speed is less than the value set in TEM_Aux_1_Speed_Interlock_Param AND the switch is on
11	Activate this output when the vehicle is stopped AND the switch is on
12	Activate this output when the vehicle is moving AND the switch is on
13	Activate this output when the transmission gear is higher than TEM_Aux1_Gear_Interlock_Param AND the switch is on (Requires Automatic Transmission)
14	Activate this output when the transmission gear is lower than TEM_Aux1_Gear_Interlock_Param AND the switch is on (Requires Automatic Transmission)
15	Activate this output when the transmission is in neutral AND the switch is on (Requires Automatic Transmission)
16	Activate this output when the transmission is not in neutral AND the switch is on (Requires Automatic Transmission)

- **TEM_Aux1_w_Int_LoadShed_Level** – This is the level at which the Output for TEM Aux1 will load shed. A value of ZERO (0) disables load shed. A value of ONE (1) is least priority (sheds first), a value of 3 highest priority (sheds last).

Parts Associated with This Feature:
See the list at the beginning of this section.

How to Test This Feature:
1. Depress switch.
2. Verify that the RPM output labeled INTERLOCKED_SWITCH_AUX1_Output is obtaining the desired
voltage (as programmed by the Diamond Logic® Builder software).
3. Verify the functionality of the 30 MPH interlock by violating the parameter (Diamond Logic® Builder software) and determine that the output shuts off.
4. Test all other interlocks by violating the programmable parameters (Diamond Logic® Builder software) to see if the output shuts off.

Note: This feature uses body controller-based software controls which can be diagnosed with Navistar's Diamond Logic® Builder software (see local dealer if not owned).

References:
Refer to the applicable International® Circuit Diagrams and Service Manuals

26.3. 60ACH: BDY INTG, SWITCH, INTERLOCKED (2) 2-Position Latched Rockers, Backlit, with “ON” Indicator Mtd on Dash, for 2; Auxiliary Load each 20-AMP Maximum; Outputs will Disengage when Vehicle Exceeds 30-MPH, Programmable; Power Available Only in “IGN” or “Accessory” Position (requires two RPM outputs).

Feature Applicability to Vehicle Platforms:

- Heavy Extreme (HX) 2021 and Newer

Extended Description: Feature 60ACH provides TWO 2-position Latched Rocker switches that control two auxiliary loads, each having a 20-Amp maximum and requiring a total of two RPM outputs. Outputs are defaulted to disengage when vehicle speed reaches 30-MPH. The outputs will only be available in IGN or accessory key-state. This feature is used for applications such as a rear work or scene light. If the operator forgets to turn the light off before he drives away, the light will shut off when the driver hits 30-MPH.

The body builder can interlock the switch with certain programmable conditions. These conditions can be set as programmable parameters using the Diamond Logic® Builder software. These parameters are listed and explained below.

This feature includes two copies of the functionality provided by 60ACG, e.g., two outputs with two switches. Each one of these outputs is exactly the same as that provided by 60ACG. The two outputs in this feature are completely autonomous (independent of each other). Each of the two outputs has its own set of five parameters as is mentioned in the description for 60ACG.

Please use the Diamond Logic® Builder software to determine pin locations for RPM inputs and outputs (refer to the CONNECTOR screen view) and to set programmable parameters (refer to the FEATURE screen view).

System Block Diagram:

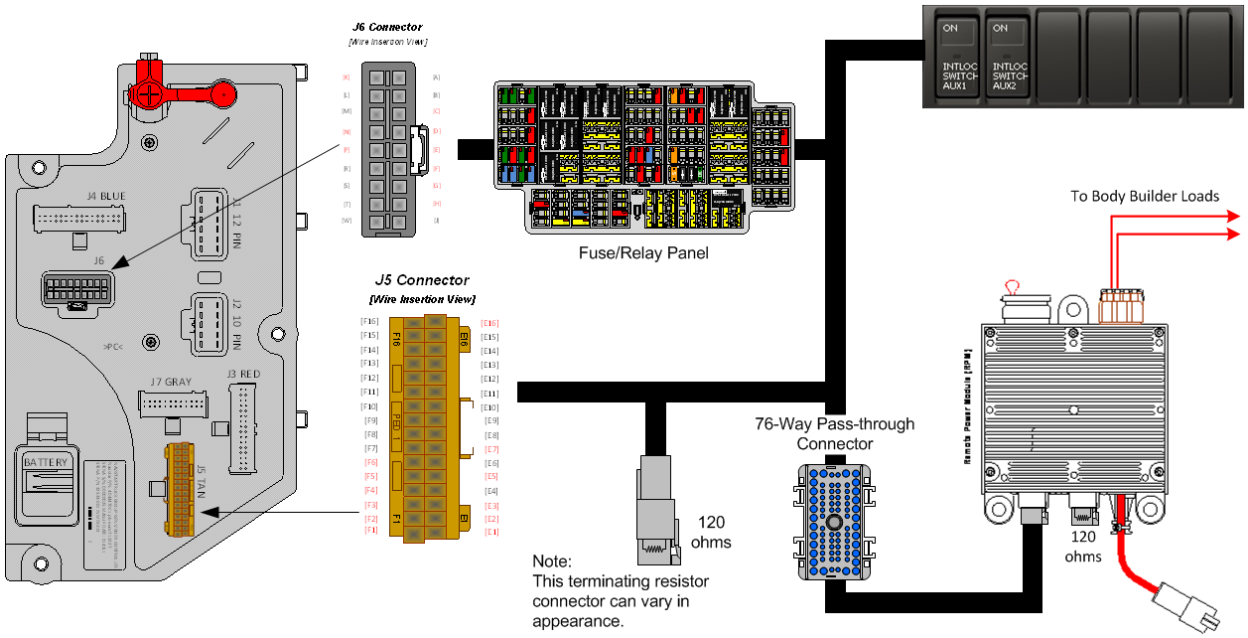

Body Controller Software Feature Codes:

- 597203 - BCM PROG, INTERLOCK AUX #1
- 597204 - BCM PROG, INTERLOCK AUX #2
  - Remote Power Module required
  - Can be installed individually

Body Controller Software Feature Code Parameters:

Parameter	ID	Description	Default	Units	Min	Max	Step
597203 - BCM PROG, INTERLOCK AUX #1							
TEM_Aux1_Interlock_Latches_Off	2006	If this is set, when the output is turned off due to an interlock, it will remain off until the switch is recycled.	OFF	On/Off	n/a	n/a	n/a
TEM_Aux1_Speed_Interlock_Param	2007	The speed parameter for the TEM Aux #1 with Interlocks feature.	30	Mph	0	100	1
TEM_Aux1_Gear_Interlock_Param	2008	The transmission gear parameter for the TEM Aux #1 with Interlocks feature (124 is park, 125 is neutral, 126 is first, etc., 251 is park). The default value is 125 (neutral).	125	Number	0	250	1
TEM_Aux1_w_Ilock_Output_Fuse	2009	Fuse parameter for the TEM Single output with interlocks feature.	20	A	0	20	0.1
TEM_Aux1_Misc_Interlock_Param	2033	Miscellaneous or control parameter used for setting the interlock for the auxiliary 1 with interlocks.	10	List	n/a	n/a	n/a
TEM_Aux1_w_Int_LoadShed_Level	3345	Loadshed level parameter for TEM Aux1 with Interlocks	1	No Units	0	3	1

597204 - BCM PROG, INTERLOCK AUX #2							
TEM_Aux2_Interlock_Latches_Off	2010	If this is set, when the output is turned off due to an interlock, it will remain off until the switch is recycled.	OFF	On/Off	n/a	n/a	n/a
TEM_Aux2_Speed_Interlock_Param	2011	The speed parameter for the TEM Aux #2 with Interlocks feature.	30	Mph	0	100	1
TEM_Aux2_Gear_Interlock_Param	2012	The transmission gear parameter for the TEM Aux #2 with Interlocks feature (124 is park, 125 is neutral, 126 is first, etc., 251 is park). The default value is 125 (neutral).	125	Number	0	250	1
TEM_Aux2_w_Ilock_Output_Fuse	2013	Fuse parameter for the TEM Single output with interlocks feature.	20	A	0	20	0.1
TEM_Aux2_Misc_Interlock_Param	2034	Miscellaneous or control parameter used for setting the interlock for the auxiliary 2 with interlocks.	10	List	n/a	n/a	n/a
TEM_Aux2_w_Int_LoadShed_Level	3346	Loadshed level parameter for TEM Aux2 with Interlocks	1	No Units	0	3	1

Parameter Definitions:

- **TEM_Aux1_Interlock_Latches_Off** – Normally, if the output is deactivated because the interlocking condition is not met, the output will re-activate as soon as the interlocking condition is re-established as long as the switch is still on. If this behavior is not desirable, the parameter TEM_Aux1_Interlock_Latches_Off parameter can be set. When it is set and the output is deactivated because the interlocking condition is not met, the output will not reactivate when the interlocking condition is re-established even if the switch is
- **TEM_Aux1_Speed_Interlock_Param** – If TEM_Aux1_Misc_Interlock_Param is set to 9 or 10, the speed-interlock parameter (TEM_Aux1_Speed_Interlock_Param) must also be set. This parameter must be set to the actual speed to use in the condition selected by TEM_Aux1_Misc_Interlock_Param (default unit for this parameter is MPH). The speed parameter is only used if TEM_Aux1_Misc_Interlock_Param is set to 9 or 10.
  Example: If you want the output to only come on when the vehicle is traveling over 15 MPH, you would set TEM_Aux1_Misc_Interlock_Param to 9 and set TEM_Aux1_Speed_Interlock_Param to 15 MPH.
- **TEM_Aux1_Gear_Interlock_Param** – If TEM_Aux1_Misc_Interlock_Param is set to 13 or 14 and the vehicle has an automatic transmission, the gear-interlock parameter (TEM_Aux1_Gear_Interlock_Param) must also be set. This parameter must be set to the transmission gear to use in the condition selected by TEM_Aux1_Misc_Interlock_Param. The transmission gear is set as follows:

.

Setting	Transmission Gear
125	Transmission in Neutral
126	Transmission is in the 1st forward gear
127	Transmission is in the 2nd forward gear
128	Transmission is in the 3rd forward gear
125 + x	Transmission is in the xth forward gear
124	Transmission is in the 1st reverse gear
123	Transmission is in the 2nd reverse gear
125 – y	Transmission is in the yth reverse gear

The transmission gear parameter is only used if TEM_Aux1_Misc_Interlock_Param is set to 13 or 14.
Example: For the output to only come on when the vehicle transmission is in a reverse gear, set TEM_Aux1_Misc_Interlock_Param to 10 and TEM_Aux1_Gear_Interlock_Param to 125.

- **TEM_Aux1_w_Ilock_Output_Fuse** – This parameter sets the limit (in AMPS) of the current flowing from the output. If the current exceeds this specified amount, the virtual fusing shuts the output off.
- **TEM_Aux1_Misc_Interlock_Param** – This parameter (TEM_Aux1_Misc_Interlock_Param) is the master parameter for this feature. The setting for this parameter selects the interlocking condition for the output. The following table indicates which interlocking condition corresponds to which setting for the parameter. To select the interlocking condition simply set the value of this parameter to the corresponding setting on the table.

.

Setting	Interlocking Condition
0	Apply no interlocks to this output
1	Activate this output when the park brake is set AND the switch is on
2	Activate this output when the park brake is not set AND the switch is on
3	Activate this output when a door is open AND the switch is on
4	Activate this output when all doors are closed AND the switch is on
5	Activate this output when the PTO is engaged AND the switch is on (Requires a PTO feature)
6	Activate this output when the PTO is not engaged AND the switch is on (Requires a PTO feature)
7	Activate this output when the engine is running AND the switch is on
8	Activate this output when the engine is not running AND the switch is on
9	Activate this output when the vehicle speed exceeds the value set in TEM_Aux_1_Speed_Interlock_Param AND the switch is on
10	Activate this output when the vehicle speed is less than the value set in TEM_Aux_1_Speed_Interlock_Param AND the switch is on
11	Activate this output when the vehicle is stopped AND the switch is on
12	Activate this output when the vehicle is moving AND the switch is on
13	Activate this output when the transmission gear is higher than TEM_Aux1_Gear_Interlock_Param AND the switch is on (Requires Automatic Transmission)
14	Activate this output when the transmission gear is lower than TEM_Aux1_Gear_Interlock_Param AND the switch is on (Requires Automatic Transmission)
15	Activate this output when the transmission is in neutral AND the switch is on (Requires Automatic Transmission)
16	Activate this output when the transmission is not in neutral AND the switch is on (Requires Automatic Transmission)

- **TEM_Aux1_w_Int_LoadShed_Level** – This is the level at which the Output for TEM Aux1 will load shed. A value of ZERO (0) disables load shed. A value of ONE (1) is least priority (sheds first), a value of 3 highest priority (sheds last).

- **TEM_Aux2_Interlock_Latches_Off** – Normally, if the output is deactivated because the interlocking condition is not met, the output will re-activate as soon as the interlocking condition is re-established as long as the switch is still on. If this behavior is not desirable, the parameter TEM_Aux2_Interlock_Latches_Off parameter can be set. When it is set and the output is deactivated because the interlocking condition is not met, the output will not reactivate when the interlocking condition is re-established even if the switch is
- **TEM_Aux2_Speed_Interlock_Param** – If TEM_Aux2_Misc_Interlock_Param is set to 9 or 10, the speed-interlock parameter (TEM_Aux2_Speed_Interlock_Param) must also be set. This parameter must be set to the actual speed to use in the condition selected by TEM_Aux2_Misc_Interlock_Param (default unit for this parameter is MPH). The speed parameter is only used if TEM_Aux2_Misc_Interlock_Param is set to 9 or 10.
  Example: If you want the output to only come on when the vehicle is traveling over 15 MPH, you would set TEM_Aux2_Misc_Interlock_Param to 9 and set TEM_Aux2_Speed_Interlock_Param to 15 MPH.
- **TEM_Aux2_Gear_Interlock_Param** – If TEM_Aux2_Misc_Interlock_Param is set to 13 or 14 and the vehicle has an automatic transmission, the gear-interlock parameter (TEM_Aux2_Gear_Interlock_Param) must also be set. This parameter must be set to the transmission gear to use in the condition selected by TEM_Aux2_Misc_Interlock_Param. The transmission gear is set as follows:

.

Setting	Transmission Gear
125	Transmission in Neutral
126	Transmission is in the 1st forward gear
127	Transmission is in the 2nd forward gear
128	Transmission is in the 3rd forward gear
125 + x	Transmission is in the xth forward gear
124	Transmission is in the 1st reverse gear
123	Transmission is in the 2nd reverse gear
125 – y	Transmission is in the yth reverse gear

  The transmission gear parameter is only used if TEM_Aux2_Misc_Interlock_Param is set to 13 or 14.
  Example: For the output to only come on when the vehicle transmission is in a reverse gear, set TEM_Aux2_Misc_Interlock_Param to 10 and TEM_Aux2_Gear_Interlock_Param to 125.
- **TEM_Aux2_w_Ilock_Output_Fuse** – This parameter sets the limit (in AMPS) of the current flowing from the output. If the current exceeds this specified amount, the virtual fusing shuts the output off.
- **TEM_Aux2_Misc_Interlock_Param** – This parameter (TEM_Aux2_Misc_Interlock_Param) is the master parameter for this feature. The

setting for this parameter selects the interlocking condition for the output. The following table indicates which interlocking condition corresponds to which setting for the parameter. To select the interlocking condition simply set the value of this parameter to the corresponding setting on the table.

.

Setting	Interlocking Condition
0	Apply no interlocks to this output
1	Activate this output when the park brake is set AND the switch is on
2	Activate this output when the park brake is not set AND the switch is on
3	Activate this output when a door is open AND the switch is on
4	Activate this output when all doors are closed AND the switch is on
5	Activate this output when the PTO is engaged AND the switch is on (Requires a PTO feature)
6	Activate this output when the PTO is not engaged AND the switch is on (Requires a PTO feature)
7	Activate this output when the engine is running AND the switch is on
8	Activate this output when the engine is not running AND the switch is on
9	Activate this output when the vehicle speed exceeds the value set in TEM_Aux_1_Speed_Interlock_Param AND the switch is on
10	Activate this output when the vehicle speed is less than the value set in TEM_Aux_1_Speed_Interlock_Param AND the switch is on
11	Activate this output when the vehicle is stopped AND the switch is on
12	Activate this output when the vehicle is moving AND the switch is on
13	Activate this output when the transmission gear is higher than TEM_Aux1_Gear_Interlock_Param AND the switch is on (Requires Automatic Transmission)
14	Activate this output when the transmission gear is lower than TEM_Aux1_Gear_Interlock_Param AND the switch is on (Requires Automatic Transmission)
15	Activate this output when the transmission is in neutral AND the switch is on (Requires Automatic Transmission)
16	Activate this output when the transmission is not in neutral AND the switch is on (Requires Automatic Transmission)

- **TEM_Aux2_w_Int_LoadShed_Level** – This is the level at which the Output for TEM Aux 2 will load shed. A value of ZERO (0) disables load shed. A value of ONE (1) is least priority (sheds first), a value of 3 highest priority (sheds last).

Parts Associated with This Feature:
See the list at the beginning of this section.

How to Test This Feature:
1. Depress first switch.
2. Verify that the RPM output labeled INTERLOCKED_SWITCH_AUX1_Output is obtaining the desired
voltage (as programmed by the Diamond Logic® Builder software).
3. Verify the functionality of the 30-MPH interlock by violating the parameter (Diamond Logic® Builder software) and determine that the output shuts off.
4. Test all other interlocks by violating the programmable parameters (Diamond Logic® Builder software) to see if the output shuts off.
5. Depress second switch.
6. Verify that the RPM output labeled INTERLOCKED_SWITCH_AUX2_Output is obtaining the desired
voltage (as programmed by the Diamond Logic® Builder software).
7. Verify the functionality of the 30-MPH interlock by violating the parameter (Diamond Logic® Builder software) and determine that the output shuts off.

8. Test all other interlocks by violating the programmable parameters (Diamond Logic® Builder software) to see if the output shuts off.

Note: This feature uses body controller-based software controls which can be diagnosed with Navistar's Diamond Logic® Builder software (see local dealer if not owned).

References:
Refer to the applicable International® Circuit Diagrams and Service Manuals

26.4. 60ACS: BDY INTG, SWITCH MOMNTRY 3POS Rocker, Backlit, with "ON" Indicator Mounted on Dash, Latching Software, for 1 Auxiliary Load 20-amp. Maximum; Power Available Only in "Ignition" or "Accessory" Position, Output Also Controlled by a Customer Remote Mounted Switch (requires 1 Remote Power Module input and 1output).

Feature Applicability to Vehicle Platforms:

- Heavy Extreme (HX) 2021 and Newer

Extended Description: This feature provides a three-way switch control function for an RPM output. An in-cab, 3-position momentary switch is connected to an RPM output. In addition, a customer-supplied, remote-mounted momentary switch may be used to control the same RPM output. This switch must be active at 12-volts and must use Ground (GND) to deactivate the output. Thus, a three-way switch control action may be performed with these two switch inputs. The RPM output may be turned off or on from either switch; however, an off command from either switch takes precedence and will turn the RPM output off. This feature is useful when a lamp or other load requires control from both in the cab and from a remote location on the body.

The in-cab switch provides a green lamp in the top section of the switch to indicate when the RPM output is on. The RPM provides a 12-Volt output that will source up to 20 Amps. The output current level may be limited through programmable parameters between .1 and 20-Amps in .1-Amp increments. This virtual fusing level is controlled in software and mimics the performance of an SAE Type 2 or 3 circuit breaker.

The RPM output may be activated with the in-cab switch provided that the IGN key is in the accessory or IGN position. The RPM output may also be activated with the remote switch input with IGN key off or on. It is important to turn off RPM outputs that have been enabled remotely before leaving a parked vehicle with the IGN key off. Otherwise, the system will remain active and drain the batteries.

60AAA, 60AAB, 60AAD, 60AAG, 60AAH, 60AAK, 60AAL, 60AAP, 60AJL OR 60AJM is a prerequisite feature that must be ordered along with 60ACS. 60ACS uses a single momentary switch in place of one of the latching switches that is provided with the above features. For example, instead of the six latching switches that are provided with

60AAA, a vehicle with 60ACS will have a switch pack of five latching switches and one momentary switch.

Please use the Diamond Logic® Builder software to determine pin locations for RPM inputs and outputs (refer to the CONNECTOR screen view) and to set programmable parameters (refer to the FEATURE screen view).

System Block Diagram:

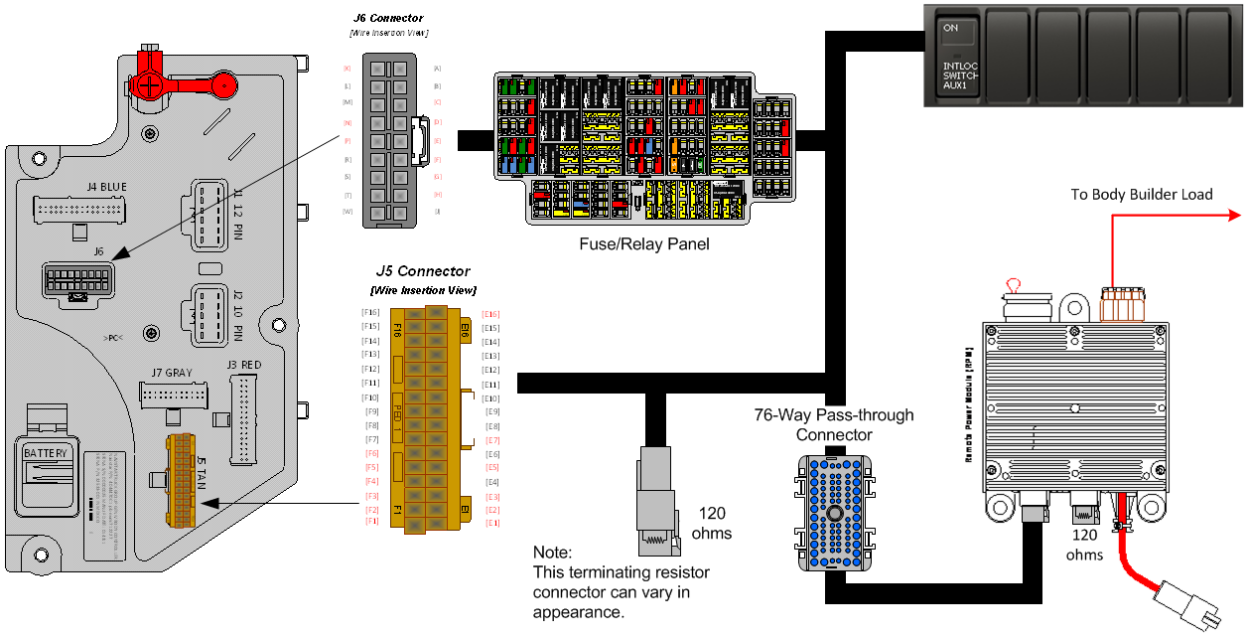

Body Controller Software Feature Codes:

- 597205 - BCM PROG, DUAL CONTROL AUX #1 SW
    - Remote Power Module required (1 output, 1 input)

Body Controller Software Feature Code Parameters:

Parameter	ID	Description	Default	Units	Min	Max	Step
TEM_Aux1_w_Ext_Sw_Fuse_Level	1998	This is the level above which the RPM will fuse the TEM Auxiliary output with external switch	20	A	0	20	0.1
TEM_Aux1_w_Ext_Switch_Init_State	2032	This programmable parameter sets the initial state of RPM channel used with TEM Auxiliary with external switch #1	OFF	No Units	N/A	N/A	N/A
TEM_Aux1_Dual_Contrl_Loadshed_Level	3352	This is the level at which the TEM AUX1 Outputs will load shed.	1	No Units	0	3	1

Parameter Definitions:

- **TEM_Aux1_w_Ext_Sw_Fuse_Level** – This parameter sets the limit (in AMPS) of the current flowing from TEM_Aux1. If the current exceeds this specified amount, the virtual fusing shuts the output off.
- **TEM_Aux1_w_Ext_Switch_Init_State** – This parameter determines the initial state of TEM_Aux1. The Default setting is OFF or zero; meaning output will be OFF at ignition key-on. When the box is checked, the value is set to ON or ONE; the output will be ON at ignition key-on.
- **TEM_Aux1_Dual_Contrl_Loadshed_Level** – This is the level at which the TEM_Aux1 Output will load shed. A value of ZERO (0) disables load shed. A value of ONE (1) is least priority (sheds first), a value of 3 highest priority (sheds last).

Parts Associated with This Feature:
See the list at the beginning of this section.

How to Test This Feature:
1. This feature allows the customer the ability to activate the output when the IGN key is turned from OFF to ACCESSORY or IGN. This functionality is obtained by utilizing Diamond Logic Builder software turning programmable parameters TEM_Aux1_w_Ext_Switch_Init_State ON.
2. Activate the first remote Body Builder installed switch to 12 volts by using a momentary switch action.
3. Verify that the RPM output labeled 3POS_SWITCH_AUX1_Output is providing the battery volts at rated current levels (as programmed in Diamond Logic® Builder).
4. Verify that the green switch indicator light comes on.
5. Verify that the RPM input labeled 3POS_SWITCH_AUX1_Input is receiving battery volts from the customer-mounted switch (as programmed in Diamond Logic® Builder).
6. Deactivate the first remote Body Builder installed switch by providing a momentary switch action to GND.
7. Verify that the RPM output goes OFF.
8. Activate the in-cab switch.
9. Verify that the RPM output labeled 3POS_SWITCH_AUX1_Output is providing the battery volts (as programmed in Diamond Logic® Builder).
10. Verify that the green switch indicator light comes on.
11. Deactivate the in-cab switch.

Note: This feature uses body controller-based software controls which can be diagnosed with Navistar's Diamond Logic® Builder software (see local dealer if not owned).

References:
Refer to the applicable International® Circuit Diagrams and Service Manuals

26.5. 60ACT: BDY INTG, SWITCH MOMNTRY 3POS Rocker, Backlit, with “ON” Indicator Mounted on Dash, Latching Software, for 2; Auxiliary Load 20-AMP Maximum; Power Available Only in “IGN” or “Accessory” Position, Output Also Controlled by a Customer Remote-Mounted Switch (requires two RPM inputs and two outputs).

Feature Applicability to Vehicle Platforms:

- Heavy Extreme (HX) 2021 and Newer

Extended Description: This feature provides three-way switch control function for two RPM outputs. Each RPM output is controlled by an in-cab, 3-position momentary switch and a 3-position momentary Body Builder-installed, remote-mounted switch. These customer-installed, remote-mounted switches must be active at 12-volts and must use GND to deactivate the output. Each in-cab, 3-position momentary switch is connected to an RPM output. In addition, each customer-supplied, remote-mounted momentary switch may be used to control the respective RPM outputs. Thus, three-way switch control action may be performed. The RPM outputs may be turned off or on from either the respective in-cab switch or the respective Body Builder switch; however, an off command from either switch takes precedence and will turn the RPM output off. This feature is useful when a lamp or other load requires control from both in the cab and from a remote location on the body.

The in-cab switches provide green lamps in the top section of the switches to indicate when the RPM outputs are on. The RPM provides 12-Volt outputs that will source up to 20-Amps. The output current level may be limited through programmable parameters between .1 and 20-Amps in .1 Amp increments. This virtual fusing level is controlled in software and mimics the performance of an SAE Type 2 or 3 circuit breaker.

The RPM outputs may be activated with the respective in-cab switches provided that the IGN key is in the accessory or IGN position. The RPM outputs may also be activated with the remote switch inputs with IGN key off or on. It is important to turn off RPM outputs that have been enabled remotely before leaving a parked vehicle with the IGN key off. Otherwise, the system will remain active and drain the batteries.

60AAA, 60AAB, 60AAD, 60AAG, 60AAH, 60AAK, 60AAL, 60AAP, 60AJL OR 60AJM is a prerequisite feature that must be ordered along with 60ACS. 60ACS uses a single momentary switch in place of one of the latching switches that is provided with the above features. For example, instead of the six latching switches that are provided with 60AAA, a vehicle with 60ACT will have a switch pack of four latching switches and two momentary switches.

Please use the Diamond Logic® Builder software to determine pin locations for RPM inputs and outputs (refer to the CONNECTOR screen view) and to set programmable parameters (refer to the FEATURE screen view).

System Block Diagram:

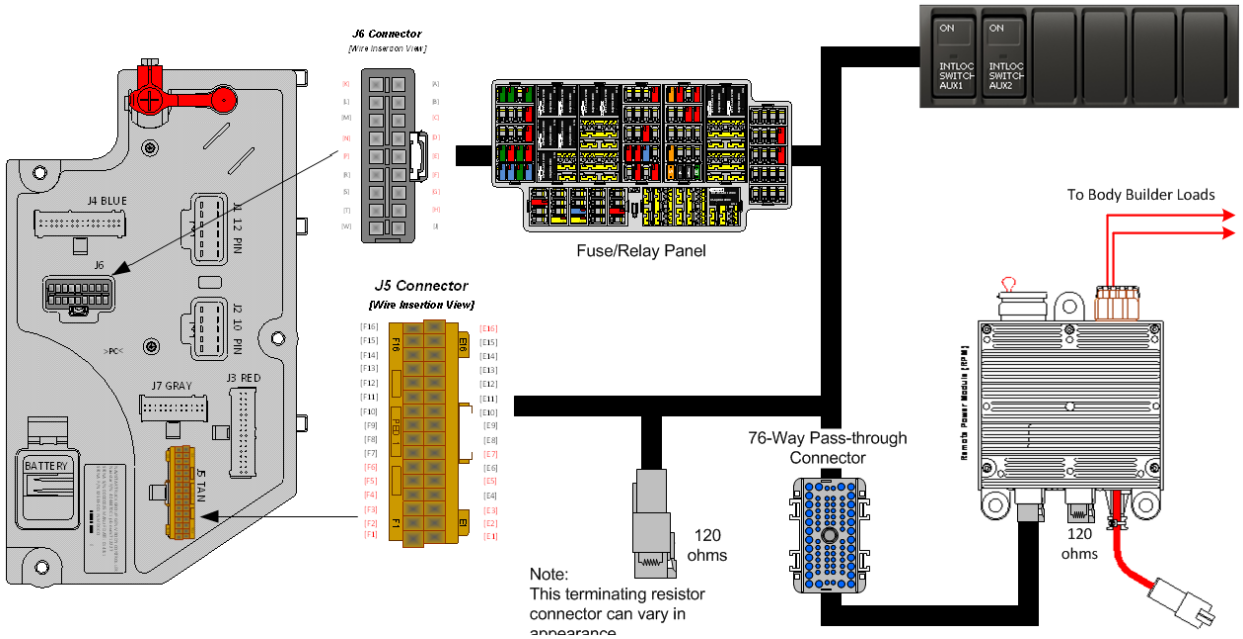

Body Controller Software Feature Codes:

- 597206 - BCM PROG, DUAL CONTROL AUX #2 SW
  - Remote Power Module required (2-outputs, 2-inputs)

Body Controller Software Feature Code Parameters:

Parameter	ID	Description	Default	Units	Min	Max	Step
TEM_Aux1_w_Ext_Sw_Fuse_Level	1998	This is the level above which the RPM will fuse the TEM Auxiliary output with external switch	20	A	0	20	0.1
TEM_Aux1_w_Ext_Switch_Init_State	2032	This programmable parameter sets the initial state of RPM channel used with TEM Auxiliary with external switch #1	OFF	No Units	N/A	N/A	N/A
TEM_Aux1_Dual_Cntrl_Loadshed_Level	3352	This is the level at which the TEM AUX1 Outputs will load shed.	1	No Units	0	3	1
TEM_Aux2_w_Ext_Sw_Fuse_Level	2106	This is the level above which the RPM will fuse the TEM Auxiliary output #2 with external switch	20	A	0	20	0.1
TEM_Aux2_w_Ext_Switch_Init_State	2142	This programmable parameter sets the initial state of RPM channel used with TEM Auxiliary with external switch #2	OFF	No Units	N/A	N/A	N/A
TEM_Aux2_Dual_Cntrl_Loadshed_Level	3353	This is the level at which the TEM AUX2 Outputs will load shed.	1	No Units	0	3	1

Parameter Definitions:

- **TEM_Aux1_w_Ext_Sw_Fuse_Level** – This parameter sets the limit (in AMPS) of the current flowing from TEM_Aux1. If the current exceeds this specified amount, the virtual fusing shuts the output off.
- **TEM_Aux1_w_Ext_Switch_Init_State** – This parameter determines the initial state of TEM_Aux1. The Default setting is OFF or zero; meaning output will be OFF at ignition key-on. When the box is checked, the value is set to ON or ONE; the output will be ON at ignition key-on.
- **TEM_Aux1_Dual_Contrl_Loadshed_Level** – This is the level at which the TEM_Aux1 Output will load shed. A value of ZERO (0) disables load shed. A value of ONE (1) is least priority (sheds first), a value of 3 highest priority (sheds last).
- **TEM_Aux2_w_Ext_Sw_Fuse_Level** – This parameter sets the limit (in AMPS) of the current flowing from TEM_Aux2. If the current exceeds this specified amount, the virtual fusing shuts the output off.
- **TEM_Aux2_w_Ext_Switch_Init_State** – This parameter determines the initial state of TEM_Aux2. The Default setting is OFF or zero; meaning output will be OFF at ignition key-on. When the box is checked, the value is set to ON or ONE; the output will be ON at ignition key-on.
- **TEM_Aux2_Dual_Contrl_Loadshed_Level** – This is the level at which the TEM_Aux2 Output will load shed. A value of ZERO (0) disables load shed. A value of ONE (1) is least priority (sheds first), a value of 3 highest priority (sheds last).

Parts Associated with This Feature:
See the list at the beginning of this section.

How to Test This Feature:
1. This feature allows the customer the ability to activate the output when the IGN key is turned from off to accessory or IGN. This functionality is obtained by utilizing Diamond Logic Builder software turning programmable parameters (TEM_Aux1_w_Ext_Switch_Init_State and TEM_Aux2_w_Ext_Switch_Init_State) on.
2. Activate the first remote Body Builder installed switch to 12 volts by using a momentary switch action.
3. Verify that the RPM output labeled 3POS_SWITCH_AUX1_Output is providing the battery volts at rated current levels (as programmed in Diamond Logic® Builder).
4. Verify that the green switch indicator light comes on.
5. Verify that the RPM input labeled 3POS_SWITCH_AUX1_Input is receiving battery volts from the customer-mounted switch (as programmed in Diamond Logic® Builder).
6. Deactivate the first remote Body Builder installed switch by providing a momentary switch action to GND.
7. Verify that the RPM output goes OFF.

8. Activate the first in-cab switch.
9. Verify that the RPM output labeled 3POS_SWITCH_AUX1_Output is providing the battery volts (as programmed in Diamond Logic® Builder).
10. Verify that the green switch indicator light comes on.
11. Deactivate the first in-cab switch.
12. Activate the second remote Body Builder installed switch to 12 volts by using a momentary switch action.
13. Verify that the RPM output labeled 3POS_SWITCH_AUX2_Output is providing the battery volts at rated current levels (as programmed in Diamond Logic® Builder).
14. Verify that the green switch indicator light comes on.
15. Verify that the RPM input labeled 3POS_SWITCH_AUX2_Input is receiving battery volts from the customer-mounted switch (as programmed in Diamond Logic® Builder).
16. Deactivate the second remote Body Builder installed switch by providing a momentary switch action to GND.
17. Verify that the RPM output goes OFF.
18. Activate the second in-cab switch.
19. Verify that the RPM output labeled 3POS_SWITCH_AUX2_Output is providing the battery volts (as programmed in Diamond Logic® Builder).
20. Verify that the green switch indicator light comes on.
21. Deactivate the second in-cab switch.

Note: This feature uses body controller-based software controls which can be diagnosed with Navistar's Diamond Logic® Builder software (see local dealer if not owned).

References:
Refer to the applicable International® Circuit Diagrams and Service Manuals

26.6. 60ACU: BDY INTG, SWITCH MOMNTRY 3-POS (3) Rocker, Backlit, with “ON” Indicator Mounted on Dash, Latching Software, for 3; Auxiliary Load 20-AMP Maximum; Power Available Only in “IGN” or “Accessory” Position, Output Also Controlled by a Customer Remote-Mounted Switch (requires three RPM inputs and three outputs).

Feature Applicability to Vehicle Platforms:

- Heavy Extreme (HX) 2021 and Newer

Extended Description: This feature provides three-way switch control function for three RPM outputs. Each RPM output is controlled by an in-cab, 3-position momentary switch and a 3-position momentary Body Builder-installed, remote-mounted switch. These customer-installed, remote-mounted switches must be active at 12-volts and must use GND to deactivate the output. Each in-cab, 3-position momentary switch is connected to an RPM output. In addition, each customer-supplied, remote-mounted momentary switch may be used to control the respective RPM outputs. Thus, three-way switch control action may be performed. The RPM outputs may be turned off or on from either the respective in-cab switch or the respective Body Builder switch; however, an off command from either switch takes precedence and will turn the RPM output off. This feature is useful when a lamp or other load requires control from both in the cab and from a remote location on the body.

The in-cab switches provide green lamps in the top section of the switches to indicate when the RPM outputs are on. The RPM provides 12-Volt outputs that will source up to 20-Amps. The output current level may be limited through programmable parameters between .1 and 20-Amps in .1-Amp increments. This virtual fusing level is controlled in software and mimics the performance of an SAE Type 2 or 3 circuit breaker.

The RPM outputs may be activated with the respective in-cab switches provided that the IGN key is in the accessory or IGN position. The RPM outputs may also be activated with the remote switch inputs with IGN key off or on. It is important to turn off RPM outputs that have been enabled remotely before leaving a parked vehicle with the IGN key off. Otherwise, the system will remain active and drain the batteries.

60AAA, 60AAB, 60AAD, 60AAG, 60AAH, 60AAK, 60AAL, 60AAP, 60AJL OR 60AJM is a prerequisite feature that must be ordered along with 60ACS. 60ACS uses a single momentary switch in place of one of the latching switches that is provided with the above features. For example, instead of the six latching switches that are provided with 60AAA, a vehicle with 60ACU will have a switch pack of three latching switches and three momentary switches.

Please use the Diamond Logic® Builder software to determine pin locations for RPM inputs and outputs (refer to the CONNECTOR screen view) and to set programmable parameters (refer to the FEATURE screen view).

System Block Diagram:

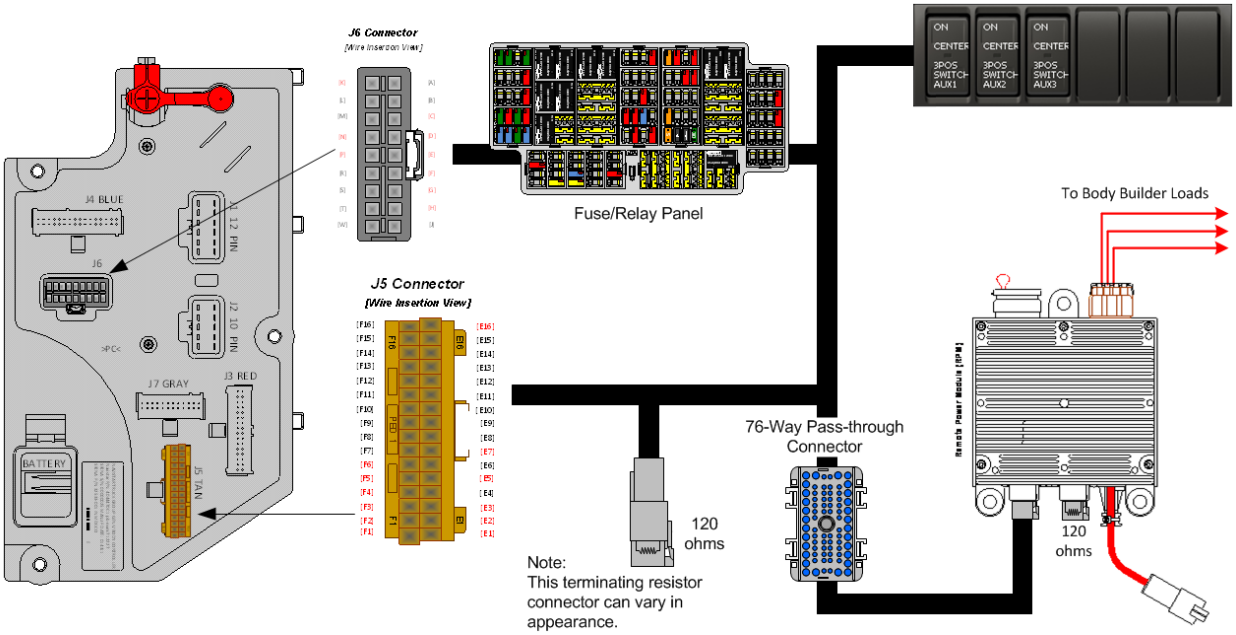

Body Controller Software Feature Codes:

- 595715 - BCM PROG, DUAL CONTROL AUX #3 SW
  - Remote Power Module required (3 outputs, 3 inputs)

Body Controller Software Feature Code Parameters:

Parameter	ID	Description	Default	Units	Min	Max	Step
TEM_Aux1_w_Ext_Sw_Fuse_Level	1998	This is the level above which the RPM will fuse the TEM Auxiliary output with external switch	20	A	0	20	0.1
TEM_Aux1_w_Ext_Switch_Init_State	2032	This programmable parameter sets the initial state of RPM channel used with TEM Auxiliary with external switch #1	OFF	No Units	N/A	N/A	N/A
TEM_Aux1_Dual_Cntrl_Loadshed_Level	3352	This is the level at which the TEM AUX1 Outputs will load shed.	1	No Units	0	3	1
TEM_Aux2_w_Ext_Sw_Fuse_Level	2106	This is the level above which the RPM will fuse the TEM Auxiliary output #2 with external switch	20	A	0	20	0.1
TEM_Aux2_w_Ext_Switch_Init_State	2142	This programmable parameter sets the initial state of RPM channel used with TEM Auxiliary with external switch #2	OFF	No Units	N/A	N/A	N/A
TEM_Aux2_Dual_Cntrl_Loadshed_Level	3353	This is the level at which the TEM AUX2 Outputs will load shed.	1	No Units	0	3	1
TEM_Aux3_w_Ext_Sw_Fuse_Level	2107	This is the level above which the RPM will fuse the TEM Auxiliary output #3 with external switch	20	A	0	20	0.1
TEM_Aux3_w_Ext_Switch_Init_State	2143	This programmable parameter sets the initial state of RPM channel used with TEM Auxiliary with external switch #3	OFF	No Units	N/A	N/A	N/A

TEM_Aux3_Dual_Contrl_Loadshed_Level	3354	This is the level at which the TEM AUX3 Outputs will load shed.	1	No Units	0	3	1

Parameter Definitions:

- **TEM_Aux1_w_Ext_Sw_Fuse_Level** – This parameter sets the limit (in AMPS) of the current flowing from TEM_Aux1. If the current exceeds this specified amount, the virtual fusing shuts the output off.
- **TEM_Aux1_w_Ext_Switch_Init_State** – This parameter determines the initial state of TEM_Aux1. The Default setting is OFF or zero; meaning output will be OFF at ignition key-on. When the box is checked, the value is set to ON or ONE; the output will be ON at ignition key-on.
- **TEM_Aux1_Dual_Contrl_Loadshed_Level** – This is the level at which the TEM_Aux1 Output will load shed. A value of ZERO (0) disables load shed. A value of ONE (1) is least priority (sheds first), a value of 3 highest priority (sheds last).
- **TEM_Aux2_w_Ext_Sw_Fuse_Level** – This parameter sets the limit (in AMPS) of the current flowing from TEM_Aux2. If the current exceeds this specified amount, the virtual fusing shuts the output off.
- **TEM_Aux2_w_Ext_Switch_Init_State** – This parameter determines the initial state of TEM_Aux2. The Default setting is OFF or zero; meaning output will be OFF at ignition key-on. When the box is checked, the value is set to ON or ONE; the output will be ON at ignition key-on.
- **TEM_Aux2_Dual_Contrl_Loadshed_Level** – This is the level at which the TEM_Aux2 Output will load shed. A value of ZERO (0) disables load shed. A value of ONE (1) is least priority (sheds first), a value of 3 highest priority (sheds last).
- **TEM_Aux3_w_Ext_Sw_Fuse_Level** – This parameter sets the limit (in AMPS) of the current flowing from TEM_Aux3. If the current exceeds this specified amount, the virtual fusing shuts the output off.
- **TEM_Aux3_w_Ext_Switch_Init_State** – This parameter determines the initial state of TEM_Aux3. The Default setting is OFF or zero; meaning output will be OFF at ignition key-on. When the box is checked, the value is set to ON or ONE; the output will be ON at ignition key-on.
- **TEM_Aux3_Dual_Contrl_Loadshed_Level** – This is the level at which the TEM_Aux3 Output will load shed. A value of ZERO (0) disables load shed. A value of ONE (1) is least priority (sheds first), a value of 3 highest priority (sheds last).

Parts Associated with This Feature:
See the list at the beginning of this section.

How to Test This Feature:
1. This feature allows the customer the ability to activate the output when the IGN key is turned from off, to accessory or IGN. This functionality is obtained by utilizing Diamond Logic Builder software turning programmable parameters (TEM_Aux1_w_Ext_Switch_Init_State, TEM_Aux2_w_Ext_Switch_Init_State and TEM_Aux3_w_Ext_Switch_Init_State) on.
2. Activate the first remote Body Builder installed switch to 12 volts by using a momentary switch action.
3. Verify that the RPM output labeled 3POS_SWITCH_AUX1_Output provides the battery volts at rated current levels (as programmed in Diamond Logic® Builder).
4. Verify that the green switch indicator light comes on.
5. Verify that the RPM input labeled 3POS_SWITCH_AUX1_Input is receiving battery volts from the customer-mounted switch (as programmed in Diamond Logic® Builder).
6. Deactivate the first remote Body Builder installed switch by providing a momentary switch action to GND.
7. Verify that the RPM output goes OFF.
8. Activate the first in-cab switch.
9. Verify that the RPM output labeled 3POS_SWITCH_AUX1_Output provides the battery volts (as programmed in Diamond Logic® Builder).
10. Verify that the green switch indicator light comes on.
11. Deactivate the first in-cab switch.
12. Activate the second remote Body Builder installed switch to 12 volts by using a momentary switch action.
13. Verify that the RPM output labeled 3POS_SWITCH_AUX2_Output is providing the battery volts at rated current levels (as programmed in Diamond Logic® Builder).
14. Verify that the green switch indicator light comes on.
15. Verify that the RPM input labeled 3POS_SWITCH_AUX2_Input receives battery volts from the customer-mounted switch (as programmed in Diamond Logic® Builder).
16. Deactivate the second remote Body Builder installed switch by providing a momentary switch action to GND.
17. Verify that the RPM output goes OFF.
18. Activate the second in-cab switch.
19. Verify that the RPM output labeled 3POS_SWITCH_AUX2_Output provides the battery volts (as programmed in Diamond Logic® Builder).
20. Verify that the green switch indicator light comes on.
21. Deactivate the second in-cab switch.
22. Activate the third remote Body Builder installed switch to 12 volts by using a momentary switch action.
23. Verify that the RPM output labeled 3POS_SWITCH_AUX3_Output provides the battery volts at rated current levels (as programmed in Diamond Logic® Builder).
24. Verify that the green switch indicator light comes on.
25. Verify that the RPM input labeled 3POS_SWITCH_AUX3_Input is receiving battery volts from the customer-mounted switch (as programmed in Diamond Logic® Builder).
26. Deactivate the third remote Body Builder installed switch by providing a momentary switch action to GND.

27. Verify that the RPM output goes OFF.
28. Activate the third in-cab switch.
29. Verify that the RPM output labeled 3POS_SWITCH_AUX3_Output provides the battery volts (as programmed in Diamond Logic® Builder).
30. Verify that the green switch indicator light comes on.
31. Deactivate the third in-cab switch.

Note: This feature uses body controller-based software controls which can be diagnosed with Navistar's Diamond Logic® Builder software (see local dealer if not owned).

References:
Refer to the applicable International® Circuit Diagrams and Service Manuals

26.7. 60AJL: BDY INTG, REMOTE POWER MODULE Mounted Inside Cab; Up to 6-Outputs & 6 Inputs, Max. 20-AMP per Channel, Max. 80-AMP Total; (Includes 1-Switch Pack with Latched Switches).

Feature Applicability to Vehicle Platforms:

- Heavy Vocational (HV)

Extended Description: Feature 60AJL includes one Remote Power Module (RPM) mounted behind the passenger seat on HV models. Included with this feature are six two-position latched switches located in the Instrument Panel. Each RPM output can provide up to 20-Amps maximum with a total of 80-Amps maximum per module.

System Block Diagram:

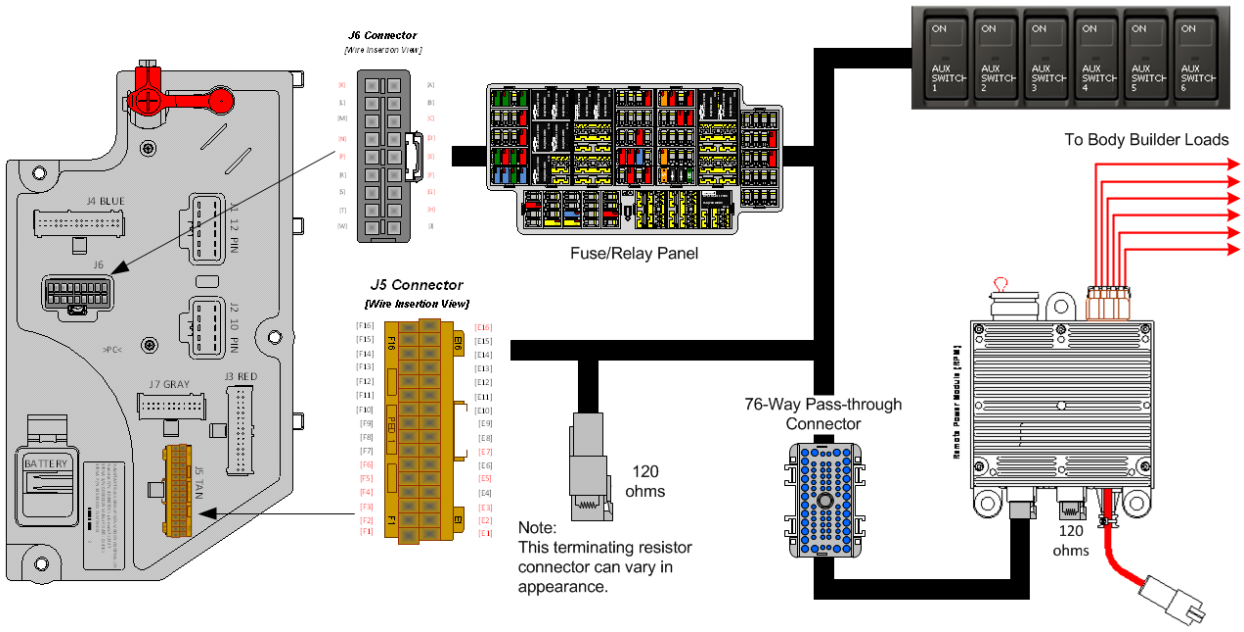

Body Controller Software Feature Codes:

Note: Feature code 60AJL is configured by special unadvertised software feature codes. These codes are determined by the number of additional features that use the RPM resources. The following codes should be added after all other features are added to the vehicle.

60ACA = 597194 – This feature should be added if there are features already using five RPM inputs/outputs. (BCM PROG, AUXILIARY LOAD #1)
60ACB = 597195 – This feature should be added if there are features already using four RPM inputs/outputs. (BCM PROG, AUXILIARY LOAD 2 ROCKER SW)
60ACC = 597196 – This feature should be added if there are features already using three RPM inputs/outputs. (BCM PROG, AUXILIARY LOAD 3 ROCKER SW)
60ACD = 597197 – This feature should be added if there are features already using two RPM inputs/outputs. (BCM PROG, AUXILIARY LOAD 4 ROCKER SW)
60ACJ = 597198 – This feature should be added if there are features already using one RPM input/output. (BCM PROG, AUXILIARY LOAD 5 ROCKER SW)
60ACK = 597199 – This feature should be added if there no other features using any RPM inputs/outputs. (BCM PROG, AUXILIARY LOAD 6 ROCKER SW)

Body Controller Software Feature Code Parameters:

Parameter	ID	Description	Default	Units	Min	Max	Step
597194 - BCM PROG, AUXILIARY LOAD #1 For Rocker Switch							
TEM_Aux1_Output_Fuse_Param	1990	This is the maximum current Aux 1 Output is allowed to source before the virtual fusing turns the output off.	20	A	0	20	0.1

TEM_Aux1_Loadshed_Level	3273	Loadshed level parameter for TEM Aux Switch 1	1	No Units	0	3	1
597195 - BCM PROG, AUXILIARY LOAD For (2) Rocker Switch							
TEM_Aux1_Output_Fuse_Param	1990	This is the maximum current Aux 1 Output is allowed to source before the virtual fusing turns the output off.	20	A	0	20	0.1
TEM_Aux2_Output_Fuse_Param	1991	This is the maximum current Aux 2 Output is allowed to source before the virtual fusing turns the output off.	20	A	0	20	0.1
TEM_Aux1_Loadshed_Level	3273	Loadshed level parameter for TEM Aux Switch 1	1	No Units	0	3	1
TEM_Aux2_Loadshed_Level	3274	Loadshed level parameter for TEM Aux Switch 2	1	No Units	0	3	1
597196 - BCM PROG, AUXILIARY LOAD For (3) Rocker Switch							
TEM_Aux1_Output_Fuse_Param	1990	This is the maximum current Aux 1 Output is allowed to source before the virtual fusing turns the output off.	20	A	0	20	0.1
TEM_Aux2_Output_Fuse_Param	1991	This is the maximum current Aux 2 Output is allowed to source before the virtual fusing turns the output off.	20	A	0	20	0.1
TEM_Aux3_Output_Fuse_Param	1992	This is the maximum current Aux 3 Output is allowed to source before the virtual fusing turns the output off.	20	A	0	20	0.1
TEM_Aux1_Loadshed_Level	3273	Loadshed level parameter for TEM Aux Switch 1	1	No Units	0	3	1
TEM_Aux2_Loadshed_Level	3274	Loadshed level parameter for TEM Aux Switch 2	1	No Units	0	3	1
TEM_Aux3_Loadshed_Level	3275	Loadshed level parameter for TEM Aux Switch 3	1	No Units	0	3	1
597197 - BCM PROG, AUXILIARY LOAD For (4) Rocker Switch							
TEM_Aux1_Output_Fuse_Param	1990	This is the maximum current Aux 1 Output is allowed to source before the virtual fusing turns the output off.	20	A	0	20	0.1
TEM_Aux2_Output_Fuse_Param	1991	This is the maximum current Aux 2 Output is allowed to source before the virtual fusing turns the output off.	20	A	0	20	0.1
TEM_Aux3_Output_Fuse_Param	1992	This is the maximum current Aux 3 Output is allowed to source before the virtual fusing turns the output off.	20	A	0	20	0.1
TEM_Aux4_Output_Fuse_Param	1995	This is the maximum current Aux 4 Output is allowed to source before the virtual fusing turns the output off.	20	A	0	20	0.1
TEM_Aux1_Loadshed_Level	3273	Loadshed level parameter for TEM Aux Switch 1	1	No Units	0	3	1
TEM_Aux2_Loadshed_Level	3274	Loadshed level parameter for TEM Aux Switch 2	1	No Units	0	3	1
TEM_Aux3_Loadshed_Level	3275	Loadshed level parameter for TEM Aux Switch 3	1	No Units	0	3	1

TEM_Aux4_Loadshed_Level	3276	Loadshed level parameter for TEM Aux Switch 4	1	No Units	0	3	1
597198 - BCM PROG, AUXILIARY LOAD For (5) Rocker Switch							
TEM_Aux1_Output_Fuse_Param	1990	This is the maximum current Aux 1 Output is allowed to source before the virtual fusing turns the output off.	20	A	0	20	0.1
TEM_Aux2_Output_Fuse_Param	1991	This is the maximum current Aux 2 Output is allowed to source before the virtual fusing turns the output off.	20	A	0	20	0.1
TEM_Aux3_Output_Fuse_Param	1992	This is the maximum current Aux 3 Output is allowed to source before the virtual fusing turns the output off.	20	A	0	20	0.1
TEM_Aux4_Output_Fuse_Param	1995	This is the maximum current Aux 4 Output is allowed to source before the virtual fusing turns the output off.	20	A	0	20	0.1
TEM_Aux5_Output_Fuse_Param	1999	This is the maximum current Aux 5 Output is allowed to source before the virtual fusing turns the output off.	20	A	0	20	0.1
TEM_Aux1_Loadshed_Level	3273	Loadshed level parameter for TEM Aux Switch 1	1	No Units	0	3	1
TEM_Aux2_Loadshed_Level	3274	Loadshed level parameter for TEM Aux Switch 2	1	No Units	0	3	1
TEM_Aux3_Loadshed_Level	3275	Loadshed level parameter for TEM Aux Switch 3	1	No Units	0	3	1
TEM_Aux4_Loadshed_Level	3276	Loadshed level parameter for TEM Aux Switch 4	1	No Units	0	3	1
TEM_Aux5_Loadshed_Level	3277	Loadshed level parameter for TEM Aux Switch 5	1	No Units	0	3	1
597199 - BCM PROG, AUXILIARY LOAD For (6) Rocker Switch							
TEM_Aux1_Output_Fuse_Param	1990	This is the maximum current Aux 1 Output is allowed to source before the virtual fusing turns the output off.	20	A	0	20	0.1
TEM_Aux2_Output_Fuse_Param	1991	This is the maximum current Aux 2 Output is allowed to source before the virtual fusing turns the output off.	20	A	0	20	0.1
TEM_Aux3_Output_Fuse_Param	1992	This is the maximum current Aux 3 Output is allowed to source before the virtual fusing turns the output off.	20	A	0	20	0.1
TEM_Aux4_Output_Fuse_Param	1995	This is the maximum current Aux 4 Output is allowed to source before the virtual fusing turns the output off.	20	A	0	20	0.1
TEM_Aux5_Output_Fuse_Param	1999	This is the maximum current Aux 5 Output is allowed to source before the virtual fusing turns the output off.	20	A	0	20	0.1
TEM_Aux6_Output_Fuse_Param	2000	This is the maximum current Aux 6 Output is allowed to source before the virtual fusing turns the output off.	20	A	0	20	0.1

TEM_Aux1_Loadshed_Level	3273	Loadshed level parameter for TEM Aux Switch 1	1	No Units	0	3	1
TEM_Aux2_Loadshed_Level	3274	Loadshed level parameter for TEM Aux Switch 2	1	No Units	0	3	1
TEM_Aux3_Loadshed_Level	3275	Loadshed level parameter for TEM Aux Switch 3	1	No Units	0	3	1
TEM_Aux4_Loadshed_Level	3276	Loadshed level parameter for TEM Aux Switch 4	1	No Units	0	3	1
TEM_Aux5_Loadshed_Level	3277	Loadshed level parameter for TEM Aux Switch 5	1	No Units	0	3	1
TEM_Aux6_Loadshed_Level	3278	Loadshed level parameter for TEM Aux Switch 6	1	No Units	0	3	1

Parameter Definitions:

- **TEM_Aux1_Output_Fuse_Param** – This parameter sets the limit (in AMPS) of the current flowing from the output labeled Aux_Switch_1_Output of RPM #1. Default is set at 20 amps.
- **TEM_Aux2_Output_Fuse_Param** – This parameter sets the limit (in AMPS) of the current flowing from the output labeled Aux_Switch_2_Output of RPM #1. Default is set at 20 amps.
- **TEM_Aux3_Output_Fuse_Param** – This parameter sets the limit (in AMPS) of the current flowing from the output labeled Aux_Switch_3_Output of RPM #1. Default is set at 20 amps.
- **TEM_Aux4_Output_Fuse_Param** – This parameter sets the limit (in AMPS) of the current flowing from the output labeled Aux_Switch_4_Output of RPM #1. Default is set at 20 amps.
- **TEM_Aux5_Output_Fuse_Param** – This parameter sets the limit (in AMPS) of the current flowing from the output labeled Aux_Switch_5_Output of RPM #1. Default is set at 20 amps.
- **TEM_Aux6_Output_Fuse_Param** – This parameter sets the limit (in AMPS) of the current flowing from the output labeled Aux_Switch_6_Output of RPM #1. Default is set at 20 amps.
- **TEM_Aux1_LoadShed_Level** – This is the level at which the Aux1 Output will load shed. A value of ZERO (0) disables load shed. The value of ONE (1) is least priority (sheds first)and the value of 3 highest priority (sheds last).
- **TEM_Aux2_LoadShed_Level** – This is the level at which the Aux2 Output will load shed. A value of ZERO (0) disables load shed. The value of ONE (1) is least priority (sheds first)and the value of 3 highest priority (sheds last).
- **TEM_Aux3_LoadShed_Level** – This is the level at which the Aux3 Output will load shed. A value of ZERO (0) disables load shed. The value of ONE (1) is least priority (sheds first)and the value of 3 highest priority (sheds last).
- **TEM_Aux4_LoadShed_Level** – This is the level at which the Aux4 Output will load shed. A value of ZERO (0) disables load shed. A value of ONE (1) is least priority (sheds first), a value of 3 highest priority (sheds last).

- **TEM_Aux5_LoadShed_Level** – This is the level at which the Aux5 Output will load shed. A value of ZERO (0) disables load shed. A value of ONE (1) is least priority (sheds first), a value of 3 highest priority (sheds last).
- **TEM_Aux6_LoadShed_Level** – This is the level at which the Aux6 Output will load shed. A value of ZERO (0) disables load shed. A value of ONE (1) is least priority (sheds first), a value of 3 highest priority (sheds last).

Parts Associated with This Feature:
See the list at the beginning of this section.

How to Test This Feature:
1. Turn key to accessory or IGN key-state.
2. Activate first in-cab switch.
3. Verify that RPM output #1 is providing battery voltage.
4. Deactivate first in-cab switch.
5. Apply 12V to RPM input #1.
6. Verify that RPM output #1 is providing battery voltage.
7. Apply GND to RPM input #1.
8. Verify that RPM output #1 shuts off.

Continue the above testing procedure for each RPM switch location.

Note: This feature uses body controller-based software controls which can be diagnosed with The International® Diamond Logic® Builder software (see local dealer if not owned).

References:
Refer to the applicable International® Circuit Diagrams and Service Manuals.

26.8. 60AJM: BDY INTG, REMOTE POWER MODULE (2) Mounted Inside Cab; Up to 6-Outputs & 6-Inputs each, Max. 20-AMP per Channel, Max. 80-AMP Total; (Includes Switch Packs with Latched Switches).

Feature Applicability to Vehicle Platforms:

- Heavy Vocational (HV)

Extended Description: Feature 60AJM includes two Remote Power Modules (RPMs) mounted behind the passenger seat on HV models. Included with this feature are twelve two-position latched switches located in the Instrument Panel. Each RPM output is capable of providing up to 20-Amps maximum with a total of 80-Amps maximum per module.

System Block Diagram:

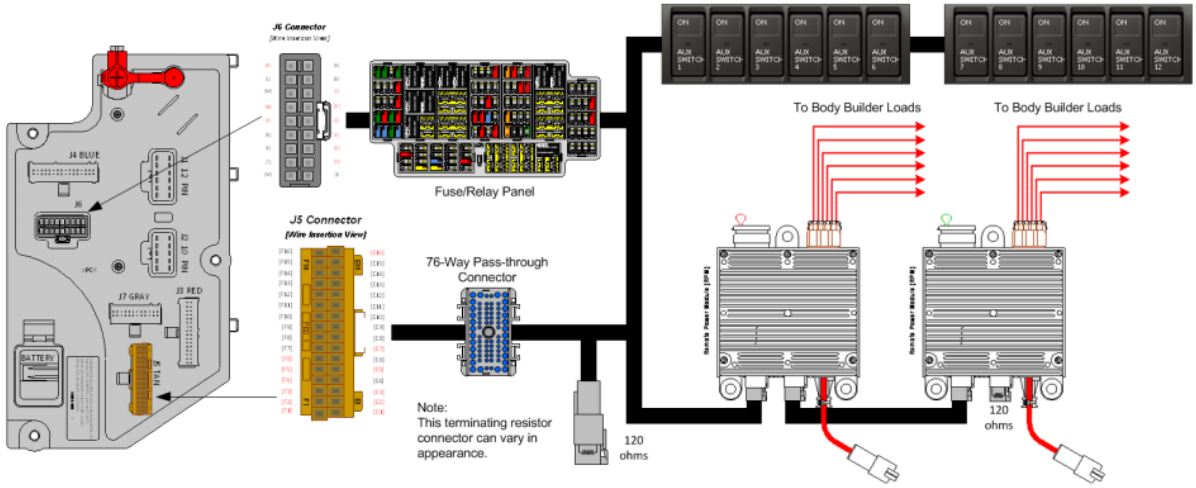

Body Controller Software Feature Codes:

Note: Feature code 60AJM is configured by special unadvertised software feature codes. These codes are determined by the number of additional features that use the RPM resources. The following codes should be added after all other features are added to the vehicle. 60ACA = 597194 – This feature should be added if there are features already using five RPM inputs/outputs. (BCM PROG, AUXILIARY LOAD #1) 60ACB = 597195 – This feature should be added if there are features already using four RPM inputs/outputs. (BCM PROG, AUXILIARY LOAD 2 ROCKER SW) 60ACC = 597196 – This feature should be added if there are features already using three RPM inputs/outputs. (BCM PROG, AUXILIARY LOAD 3 ROCKER SW) 60ACD = 597197 – This feature should be added if there are features already using two RPM inputs/outputs. (BCM PROG, AUXILIARY LOAD 4 ROCKER SW) 60ACJ = 597198 – This feature should be added if there are features already using one RPM input/output. (BCM PROG, AUXILIARY LOAD 5 ROCKER SW) 60ACK = 597199 – This feature should be added if there no other features using any RPM inputs/outputs. (BCM PROG,

AUXILIARY LOAD 6 ROCKER SW) 60ACV = 597202 – This feature should be added to add the second RPM (60AAB). (BCM PROG, ADDITIONAL 6 AUXILIARY SW)

Body Controller Software Feature Code Parameters:

Parameter	ID	Description	Default	Units	Min	Max	Step
597194 - BCM PROG, AUXILIARY LOAD #1 For Rocker Switch							
TEM_Aux1_Output_Fuse_Param	1990	This is the maximum current Aux 1 Output is allowed to source before the virtual fusing turns the output off.	20	A	0	20	0.1
TEM_Aux1_Loadshed_Level	3273	Loadshed level parameter for TEM Aux Switch 1	1	No Units	0	3	1
597195 - BCM PROG, AUXILIARY LOAD For (2) Rocker Switch							
TEM_Aux1_Output_Fuse_Param	1990	This is the maximum current Aux 1 Output is allowed to source before the virtual fusing turns the output off.	20	A	0	20	0.1
TEM_Aux2_Output_Fuse_Param	1991	This is the maximum current Aux 2 Output is allowed to source before the virtual fusing turns the output off.	20	A	0	20	0.1
TEM_Aux1_Loadshed_Level	3273	Loadshed level parameter for TEM Aux Switch 1	1	No Units	0	3	1
TEM_Aux2_Loadshed_Level	3274	Loadshed level parameter for TEM Aux Switch 2	1	No Units	0	3	1
597196 - BCM PROG, AUXILIARY LOAD For (3) Rocker Switch							
TEM_Aux1_Output_Fuse_Param	1990	This is the maximum current Aux 1 Output is allowed to source before the virtual fusing turns the output off.	20	A	0	20	0.1
TEM_Aux2_Output_Fuse_Param	1991	This is the maximum current Aux 2 Output is allowed to source before the virtual fusing turns the output off.	20	A	0	20	0.1
TEM_Aux3_Output_Fuse_Param	1992	This is the maximum current Aux 3 Output is allowed to source before the virtual fusing turns the output off.	20	A	0	20	0.1
TEM_Aux1_Loadshed_Level	3273	Loadshed level parameter for TEM Aux Switch 1	1	No Units	0	3	1
TEM_Aux2_Loadshed_Level	3274	Loadshed level parameter for TEM Aux Switch 2	1	No Units	0	3	1
TEM_Aux3_Loadshed_Level	3275	Loadshed level parameter for TEM Aux Switch 3	1	No Units	0	3	1
597197 - BCM PROG, AUXILIARY LOAD For (4) Rocker Switch							
TEM_Aux1_Output_Fuse_Param	1990	This is the maximum current Aux 1 Output is allowed to source before the virtual fusing turns the output off.	20	A	0	20	0.1
TEM_Aux2_Output_Fuse_Param	1991	This is the maximum current Aux 2 Output is allowed to source before the virtual fusing turns the output off.	20	A	0	20	0.1
TEM_Aux3_Output_Fuse_Param	1992	This is the maximum current Aux 3 Output is allowed to source before	20	A	0	20	0.1

		the virtual fusing turns the output off.					
TEM_Aux4_Output_Fuse_Param	1995	This is the maximum current Aux 4 Output is allowed to source before the virtual fusing turns the output off.	20	A	0	20	0.1
TEM_Aux1_Loadshed_Level	3273	Loadshed level parameter for TEM Aux Switch 1	1	No Units	0	3	1
TEM_Aux2_Loadshed_Level	3274	Loadshed level parameter for TEM Aux Switch 2	1	No Units	0	3	1
TEM_Aux3_Loadshed_Level	3275	Loadshed level parameter for TEM Aux Switch 3	1	No Units	0	3	1
TEM_Aux4_Loadshed_Level	3276	Loadshed level parameter for TEM Aux Switch 4	1	No Units	0	3	1
597198 - BCM PROG, AUXILIARY LOAD For (5) Rocker Switch							
TEM_Aux1_Output_Fuse_Param	1990	This is the maximum current Aux 1 Output is allowed to source before the virtual fusing turns the output off.	20	A	0	20	0.1
TEM_Aux2_Output_Fuse_Param	1991	This is the maximum current Aux 2 Output is allowed to source before the virtual fusing turns the output off.	20	A	0	20	0.1
TEM_Aux3_Output_Fuse_Param	1992	This is the maximum current Aux 3 Output is allowed to source before the virtual fusing turns the output off.	20	A	0	20	0.1
TEM_Aux4_Output_Fuse_Param	1995	This is the maximum current Aux 4 Output is allowed to source before the virtual fusing turns the output off.	20	A	0	20	0.1
TEM_Aux5_Output_Fuse_Param	1999	This is the maximum current Aux 5 Output is allowed to source before the virtual fusing turns the output off.	20	A	0	20	0.1
TEM_Aux1_Loadshed_Level	3273	Loadshed level parameter for TEM Aux Switch 1	1	No Units	0	3	1
TEM_Aux2_Loadshed_Level	3274	Loadshed level parameter for TEM Aux Switch 2	1	No Units	0	3	1
TEM_Aux3_Loadshed_Level	3275	Loadshed level parameter for TEM Aux Switch 3	1	No Units	0	3	1
TEM_Aux4_Loadshed_Level	3276	Loadshed level parameter for TEM Aux Switch 4	1	No Units	0	3	1
TEM_Aux5_Loadshed_Level	3277	Loadshed level parameter for TEM Aux Switch 5	1	No Units	0	3	1
597199 - BCM PROG, AUXILIARY LOAD For (6) Rocker Switch							
TEM_Aux1_Output_Fuse_Param	1990	This is the maximum current Aux 1 Output is allowed to source before the virtual fusing turns the output off.	20	A	0	20	0.1
TEM_Aux2_Output_Fuse_Param	1991	This is the maximum current Aux 2 Output is allowed to source before the virtual fusing turns the output off.	20	A	0	20	0.1
TEM_Aux3_Output_Fuse_Param	1992	This is the maximum current Aux 3 Output is allowed to source before the virtual fusing turns the output off.	20	A	0	20	0.1

TEM_Aux4_Output_Fuse_Param	1995	This is the maximum current Aux 4 Output is allowed to source before the virtual fusing turns the output off.	20	A	0	20	0.1
TEM_Aux5_Output_Fuse_Param	1999	This is the maximum current Aux 5 Output is allowed to source before the virtual fusing turns the output off.	20	A	0	20	0.1
TEM_Aux6_Output_Fuse_Param	2000	This is the maximum current Aux 6 Output is allowed to source before the virtual fusing turns the output off.	20	A	0	20	0.1
TEM_Aux1_Loadshed_Level	3273	Loadshed level parameter for TEM Aux Switch 1	1	No Units	0	3	1
TEM_Aux2_Loadshed_Level	3274	Loadshed level parameter for TEM Aux Switch 2	1	No Units	0	3	1
TEM_Aux3_Loadshed_Level	3275	Loadshed level parameter for TEM Aux Switch 3	1	No Units	0	3	1
TEM_Aux4_Loadshed_Level	3276	Loadshed level parameter for TEM Aux Switch 4	1	No Units	0	3	1
TEM_Aux5_Loadshed_Level	3277	Loadshed level parameter for TEM Aux Switch 5	1	No Units	0	3	1
TEM_Aux6_Loadshed_Level	3278	Loadshed level parameter for TEM Aux Switch 6	1	No Units	0	3	1

Parameter Definitions:

- **TEM_Aux1_Output_Fuse_Param** – This parameter sets the limit (in AMPS) of the current flowing from the output labeled Aux_Switch_1_Output of RPM #1. Default is set at 20 amps.
- **TEM_Aux2_Output_Fuse_Param** – This parameter sets the limit (in AMPS) of the current flowing from the output labeled Aux_Switch_2_Output of RPM #1. Default is set at 20 amps.
- **TEM_Aux3_Output_Fuse_Param** – This parameter sets the limit (in AMPS) of the current flowing from the output labeled Aux_Switch_3_Output of RPM #1. Default is set at 20 amps.
- **TEM_Aux4_Output_Fuse_Param** – This parameter sets the limit (in AMPS) of the current flowing from the output labeled Aux_Switch_4_Output of RPM #1. Default is set at 20 amps.
- **TEM_Aux5_Output_Fuse_Param** – This parameter sets the limit (in AMPS) of the current flowing from the output labeled Aux_Switch_5_Output of RPM #1. Default is set at 20 amps.
- **TEM_Aux6_Output_Fuse_Param** – This parameter sets the limit (in AMPS) of the current flowing from the output labeled Aux_Switch_6_Output of RPM #1. Default is set at 20 amps.
- **TEM_Aux1_LoadShed_Level** – This is the level at which the Aux1 Output will load shed. A value of ZERO (0) disables load shed. A value of ONE (1) is least priority (sheds first), a value of 3 highest priority (sheds last).

- **TEM_Aux2_LoadShed_Level** – This is the level at which the Aux2 Output will load shed. A value of ZERO (0) disables load shed. A value of ONE (1) is least priority (sheds first), a value of 3 highest priority (sheds last).
- **TEM_Aux3_LoadShed_Level** – This is the level at which the Aux3 Output will load shed. A value of ZERO (0) disables load shed. A value of ONE (1) is least priority (sheds first), a value of 3 highest priority (sheds last).
- **TEM_Aux4_LoadShed_Level** – This is the level at which the Aux4 Output will load shed. A value of ZERO (0) disables load shed. A value of ONE (1) is least priority (sheds first), a value of 3 highest priority (sheds last).
- **TEM_Aux5_LoadShed_Level** – This is the level at which the Aux5 Output will load shed. A value of ZERO (0) disables load shed. A value of ONE (1) is least priority (sheds first), a value of 3 highest priority (sheds last).
- **TEM_Aux6_LoadShed_Level** – This is the level at which the Aux6 Output will load shed. A value of ZERO (0) disables load shed. A value of ONE (1) is least priority (sheds first), a value of 3 highest priority (sheds last).

Parts Associated with This Feature:
See the list at the beginning of this section.

How to Test This Feature:
1. Turn key to accessory or IGN key-state.
2. Activate first in-cab switch.
3. Verify that RPM output #1 is providing battery voltage.
4. Deactivate first in-cab switch.
5. Apply 12V to RPM input #1.
6. Verify that RPM output #1 is providing battery voltage.
7. Apply GND to RPM input #1.
8. Verify that RPM output #1 shuts off.

Continue the above testing procedure for each RPM switch location.

Note: This feature uses body controller-based software controls which can be diagnosed with The International® Diamond Logic® Builder software (see local dealer if not owned).

References:
Refer to the applicable International® Circuit Diagrams and Service Manuals.

26.9. 08SAJ: SWITCH, BODY CIRCUITS, MID for Body Builder; 12-Momentary Switches in IP, With Two Power Modules with Six Channels, 20-AMP Max. per Channel, 80-AMP Max. Output, Switch Control Power Modules through Multiplex Wiring, Mounted on Battery Box, BOC.

Feature Applicability to Vehicle Platforms:

- Heavy Vocational (HV)
- Medium Vocational (MV)
- Heavy Extreme (HX) 2021 and Newer

Extended Description: Feature 08SAJ includes two Remote Power Modules (RPMs) mounted behind the battery box on MV or on a bracket under cab on HV. Included with this feature are twelve 3-position momentary switches located in the Instrument Panel. Each RPM output can provide up to 20-Amps maximum with a total of 80-Amps maximum per module.

System Block Diagram:

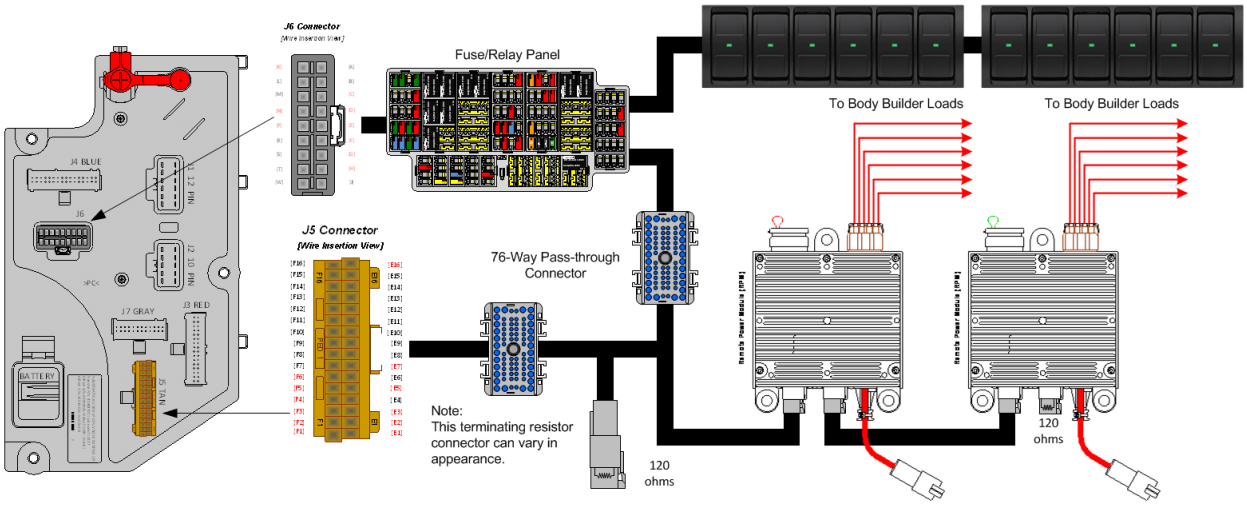

Body Controller Software Feature Codes:

- 597137 - BCM PROG, REMOTE POWER MOD #1
- 597138 - BCM PROG, REMOTE POWER MOD #2
  - Both features are required

Body Controller Software Feature Code Parameters:

Parameter	ID	Description	Default	Units	Min	Max	Step
597137 - BCM PROG, REMOTE POWER MOD #1							
PwrMod1_Fuse_Level1_Param	392	Current Limit in amps for Output #1 of Remote Power Module #1	20	A	0	20	0.1
PwrMod1_Fuse_Level2_Param	393	Current Limit in amps for Output #2 of Remote Power Module #1	20	A	0	20	0.1
PwrMod1_Fuse_Level3_Param	394	Current Limit in amps for Output #3 of Remote Power Module #1	20	A	0	20	0.1

PwrMod1_Fuse_Level4_Param	395	Current Limit in amps for Output #4 of Remote Power Module #1	20	A	0	20	0.1
PwrMod1_Fuse_Level5_Param	396	Current Limit in amps for Output #5 of Remote Power Module #1	20	A	0	20	0.1
PwrMod1_Fuse_Level6_Param	397	Current Limit in amps for Output #6 of Remote Power Module #1	20	A	0	20	0.1
PwrMod1_Init_State1_Param	398	If this parameter is set to 1, Output #1 of Remote Power Module #1 will be turned on at ignition key-on, if set to 0 output will be off at key-on.	OFF	No Units	N/A	N/A	N/A
PwrMod1_Init_State2_Param	399	If this parameter is set to 1, Output #2 of Remote Power Module #1 will be turned on at ignition key-on, if set to 0 output will be off at key-on.	OFF	No Units	N/A	N/A	N/A
PwrMod1_Init_State3_Param	400	If this parameter is set to 1, Output #3 of Remote Power Module #1 will be turned on at ignition key-on, if set to 0 output will be off at key-on.	OFF	No Units	N/A	N/A	N/A
PwrMod1_Init_State4_Param	401	If this parameter is set to 1, Output #4 of Remote Power Module #1 will be turned on at ignition key-on, if set to 0 output will be off at key-on.	OFF	No Units	N/A	N/A	N/A
PwrMod1_Init_State5_Param	402	If this parameter is set to 1, Output #5 of Remote Power Module #1 will be turned on at ignition key-on, if set to 0 output will be off at key-on.	OFF	No Units	N/A	N/A	N/A
PwrMod1_Init_State6_Param	403	If this parameter is set to 1, Output #6 of Remote Power Module #1 will be turned on at ignition key-on, if set to 0 output will be off at key-on.	OFF	No Units	N/A	N/A	N/A
RPM1_Channel1_Loadshed_Level	3326	This is the level at which the RPM1 channel 1 Output will load shed.	1	No Units	0	3	1
RPM1_Channel2_Loadshed_Level	3327	This is the level at which the RPM1 channel 2 Output will load shed.	1	No Units	0	3	1
RPM1_Channel3_Loadshed_Level	3328	This is the level at which the RPM1 channel 3 Output will load shed.	1	No Units	0	3	1
RPM1_Channel4_Loadshed_Level	3329	This is the level at which the RPM1 channel 4 Output will load shed.	1	No Units	0	3	1
RPM1_Channel5_Loadshed_Level	3330	This is the level at which the RPM1 channel 5 Output will load shed.	1	No Units	0	3	1
RPM1_Channel6_Loadshed_Level	3331	This is the level at which the RPM1 channel 6 Output will load shed.	1	No Units	0	3	1
597138 - BCM PROG, REMOTE POWER MOD #2							
PwrMod2_Fuse_Level1_Param	035	Current Limit in amps for Output #1 of Remote Power Module #2	20	A	0	20	0.1
PwrMod2_Fuse_Level2_Param	036	Current Limit in amps for Output #2 of Remote Power Module #2	20	A	0	20	0.1
PwrMod2_Fuse_Level3_Param	037	Current Limit in amps for Output #3 of Remote Power Module #2	20	A	0	20	0.1
PwrMod2_Fuse_Level4_Param	038	Current Limit in amps for Output #4 of Remote Power Module #2	20	A	0	20	0.1
PwrMod2_Fuse_Level5_Param	039	Current Limit in amps for Output #5 of Remote Power Module #2	20	A	0	20	0.1
PwrMod2_Fuse_Level6_Param	040	Current Limit in amps for Output #6 of Remote Power Module #2	20	A	0	20	0.1
PwrMod2_Init_State1_Param	041	If this parameter is set to 1, Output #1 of Remote Power Module #2 will	OFF	No Units	N/A	N/A	N/A

		be turned on at ignition key-on, if set to 0 output will be off at key-on.					
PwrMod2_Init_State2_Param	042	If this parameter is set to 1, Output #2 of Remote Power Module #2 will be turned on at ignition key-on, if set to 0 output will be off at key-on.	OFF	No Units	N/A	N/A	N/A
PwrMod2_Init_State3_Param	043	If this parameter is set to 1, Output #3 of Remote Power Module #2 will be turned on at ignition key-on, if set to 0 output will be off at key-on.	OFF	No Units	N/A	N/A	N/A
PwrMod2_Init_State4_Param	044	If this parameter is set to 1, Output #4 of Remote Power Module #2 will be turned on at ignition key-on, if set to 0 output will be off at key-on.	OFF	No Units	N/A	N/A	N/A
PwrMod2_Init_State5_Param	045	If this parameter is set to 1, Output #5 of Remote Power Module #2 will be turned on at ignition key-on, if set to 0 output will be off at key-on.	OFF	No Units	N/A	N/A	N/A
PwrMod2_Init_State6_Param	046	If this parameter is set to 1, Output #6 of Remote Power Module #2 will be turned on at ignition key-on, if set to 0 output will be off at key-on.	OFF	No Units	N/A	N/A	N/A
RPM2_Channel1_Loadshed_Level	3333	This is the level at which the RPM2 channel 1 Output will load shed.	1	No Units	0	3	1
RPM2_Channel2_Loadshed_Level	3334	This is the level at which the RPM2 channel 2 Output will load shed.	1	No Units	0	3	1
RPM2_Channel3_Loadshed_Level	3335	This is the level at which the RPM2 channel 3 Output will load shed.	1	No Units	0	3	1
RPM2_Channel4_Loadshed_Level	3336	This is the level at which the RPM2 channel 4 Output will load shed.	1	No Units	0	3	1
RPM2_Channel5_Loadshed_Level	3337	This is the level at which the RPM2 channel 5 Output will load shed.	1	No Units	0	3	1
RPM2_Channel6_Loadshed_Level	3338	This is the level at which the RPM2 channel 6 Output will load shed.	1	No Units	0	3	1

Parameter Definitions:

- **PwrMod1_Fuse_Level1_Param** – This parameter sets the limit (in AMPS) of the current flowing from Output #1 of RPM #1.
- **PwrMod1_Fuse_Level2_Param** – This parameter sets the limit (in AMPS) of the current flowing from Output #2 of RPM #1.
- **PwrMod1_Fuse_Level3_Param** – This parameter sets the limit (in AMPS) of the current flowing from Output #3 of RPM #1.
- **PwrMod1_Fuse_Level4_Param** – This parameter sets the limit (in AMPS) of the current flowing from Output #4 of RPM #1.
- **PwrMod1_Fuse_Level5_Param** – This parameter sets the limit (in AMPS) of the current flowing from Output #5 of RPM #1.
- **PwrMod1_Fuse_Level6_Param** – This parameter sets the limit (in AMPS) of the current flowing from Output #6 of RPM #1.
- **PwrMod1_Init_State1_Param** – This parameter determines the initial state of RPM#1, Output #1. The Default setting is OFF or zero; meaning output will be

OFF at ignition key-on. When the box is checked, the value is set to ON or ONE; the output will be ON at ignition key-on.

- **PwrMod1_Init_State2_Param** – This parameter determines the initial state of RPM#1, Output #2. The Default setting is OFF or zero; meaning output will be OFF at ignition key-on. When the box is checked, the value is set to ON or ONE; the output will be ON at ignition key-on.
- **PwrMod1_Init_State3_Param** – This parameter determines the initial state of RPM#1, Output #3. The Default setting is OFF or zero; meaning output will be OFF at ignition key-on. When the box is checked, the value is set to ON or ONE; the output will be ON at ignition key-on.
- **PwrMod1_Init_State4_Param** – This parameter determines the initial state of RPM#1, Output #4. The Default setting is OFF or zero; meaning output will be OFF at ignition key-on. When the box is checked, the value is set to ON or ONE; the output will be ON at ignition key-on.
- **PwrMod1_Init_State5_Param** – This parameter determines the initial state of RPM#1, Output #5. The Default setting is OFF or zero; meaning output will be OFF at ignition key-on. When the box is checked, the value is set to ON or ONE; the output will be ON at ignition key-on.
- **PwrMod1_Init_State6_Param** – This parameter determines the initial state of RPM#1, Output #6. The Default setting is OFF or zero; meaning output will be OFF at ignition key-on. When the box is checked, the value is set to ON or ONE; the output will be ON at ignition key-on.
- **RPM1_Channel1_LoadShed_Level** – This is the level at which the RPM1 channel 1 Output will load shed. A value of ZERO (0) disables load shed. A value of ONE (1) is least priority (sheds first), a value of 3 highest priority (sheds last).
- **RPM1_Channel2_LoadShed_Level** – This is the level at which the RPM1 channel 2 Output will load shed. A value of ZERO (0) disables load shed. A value of ONE (1) is least priority (sheds first), a value of 3 highest priority (sheds last).
- **RPM1_Channel3_LoadShed_Level** – This is the level at which the RPM1 channel 3 Output will load shed. A value of ZERO (0) disables load shed. A value of ONE (1) is least priority (sheds first), a value of 3 highest priority (sheds last).
- **RPM1_Channel4_LoadShed_Level** – This is the level at which the RPM1 channel 4 Output will load shed. A value of ZERO (0) disables load shed. A value of ONE (1) is least priority (sheds first), a value of 3 highest priority (sheds last).
- **RPM1_Channel5_LoadShed_Level** – This is the level at which the RPM1 channel 5 Output will load shed. A value of ZERO (0) disables load shed. A value of ONE (1) is least priority (sheds first), a value of 3 highest priority (sheds last).
- **RPM1_Channel6_LoadShed_Level** – This is the level at which the RPM1 channel 6 Output will load shed. A value of ZERO (0) disables load shed. A value of ONE (1) is least priority (sheds first), a value of 3 highest priority (sheds last).
-
- **PwrMod2_Fuse_Level1_Param** – This parameter sets the limit (in AMPS) of the current flowing from Output #1 of RPM #2.

- **PwrMod2_Fuse_Level2_Param** – This parameter sets the limit (in AMPS) of the current flowing from Output #2 of RPM #2.
- **PwrMod2_Fuse_Level3_Param** – This parameter sets the limit (in AMPS) of the current flowing from Output #3 of RPM #2.
- **PwrMod2_Fuse_Level4_Param** – This parameter sets the limit (in AMPS) of the current flowing from Output #4 of RPM #2.
- **PwrMod2_Fuse_Level5_Param** – This parameter sets the limit (in AMPS) of the current flowing from Output #5 of RPM #2.
- **PwrMod2_Fuse_Level6_Param** – This parameter sets the limit (in AMPS) of the current flowing from Output #6 of RPM #2.
- **PwrMod2_Init_State1_Param** – This parameter determines the initial state of RPM#2, Output #1. The Default setting is OFF or zero; meaning output will be OFF at ignition key-on. When the box is checked, the value is set to ON or ONE; the output will be ON at ignition key-on.
- **PwrMod2_Init_State2_Param** – This parameter determines the initial state of RPM#2, Output #2. The Default setting is OFF or zero; meaning output will be OFF at ignition key-on. When the box is checked, the value is set to ON or ONE; the output will be ON at ignition key-on.
- **PwrMod2_Init_State3_Param** – This parameter determines the initial state of RPM#2, Output #3. The Default setting is OFF or zero; meaning output will be OFF at ignition key-on. When the box is checked, the value is set to ON or ONE; the output will be ON at ignition key-on.
- **PwrMod2_Init_State4_Param** – This parameter determines the initial state of RPM#2, Output #4. The Default setting is OFF or zero; meaning output will be OFF at ignition key-on. When the box is checked, the value is set to ON or ONE; the output will be ON at ignition key-on.
- **PwrMod2_Init_State5_Param** – This parameter determines the initial state of RPM#2, Output #5. The Default setting is OFF or zero; meaning output will be OFF at ignition key-on. When the box is checked, the value is set to ON or ONE; the output will be ON at ignition key-on.
- **PwrMod2_Init_State6_Param** – This parameter determines the initial state of RPM#2, Output #6. The Default setting is OFF or zero; meaning output will be OFF at ignition key-on. When the box is checked, the value is set to ON or ONE; the output will be ON at ignition key-on.
- **RPM2_Channel1_LoadShed_Level** – This is the level at which the RPM2 channel 1 Output will load shed. A value of ZERO (0) disables load shed. A value of ONE (1) is least priority (sheds first), a value of 3 highest priority (sheds last).
- **RPM2_Channel2_LoadShed_Level** – This is the level at which the RPM2 channel 2 Output will load shed. A value of ZERO (0) disables load shed. A value of ONE (1) is least priority (sheds first), a value of 3 highest priority (sheds last).
- **RPM2_Channel3_LoadShed_Level** – This is the level at which the RPM2 channel 3 Output will load shed. A value of ZERO (0) disables load shed. A value of ONE (1) is least priority (sheds first), a value of 3 highest priority (sheds last).

- **RPM2_Channel4_LoadShed_Level** – This is the level at which the RPM2 channel 4 Output will load shed. A value of ZERO (0) disables load shed. A value of ONE (1) is least priority (sheds first), a value of 3 highest priority (sheds last).
- **RPM2_Channel5_LoadShed_Level** – This is the level at which the RPM2 channel 5 Output will load shed. A value of ZERO (0) disables load shed. A value of ONE (1) is least priority (sheds first), a value of 3 highest priority (sheds last).
- **RPM2_Channel6_LoadShed_Level** – This is the level at which the RPM2 channel 6 Output will load shed. A value of ZERO (0) disables load shed. A value of ONE (1) is least priority (sheds first), a value of 3 highest priority (sheds last).

Parts Associated with This Feature:
See the list at the beginning of this section.

How to Test This Feature:
1. Turn key to accessory or IGN key state.
2. Activate first in-cab switch.
3. Verify that RPM output #1 is providing battery voltage.
4. Deactivate first in-cab switch.
5. Apply 12V to RPM input #1.
6. Verify that RPM output #1 is providing battery voltage.
7. Apply GND to RPM input #1.
8. Verify that RPM output #1 shuts off.

Continue the above testing procedure for each RPM switch location.

Note: This feature uses body controller-based software controls which can be diagnosed with The International® Diamond Logic® Builder software (see local dealer if not owned).

References:
Refer to the applicable International® Circuit Diagrams and Service Manuals.

26.10. 08VZR: SWITCH, BODY CIRCUITS, MID for Bodybuilder, 6-Switches in Instrument Panel; One Power Module with 6 Channels, 20-Amp Max. Per Channel, 80 Amp Max Output, Switches Control Power Module Through Multiplex Wiring, Mounted in Cab Behind Driver Seat.

Feature Applicability to Vehicle Platforms:

- Heavy Vocational (HV)
- Medium Vocational (MV)
- Heavy Extreme (HX) 2021 and Newer

Extended Description: Feature 08VZR includes one Remote Power Module (RPM) mounted in the cab behind the driver seat. Included with this feature are six 3-position momentary switches located in the Instrument Panel. Each RPM output can provide up to 20-Amps maximum with a total of 80-Amps maximum per module.

System Block Diagram:

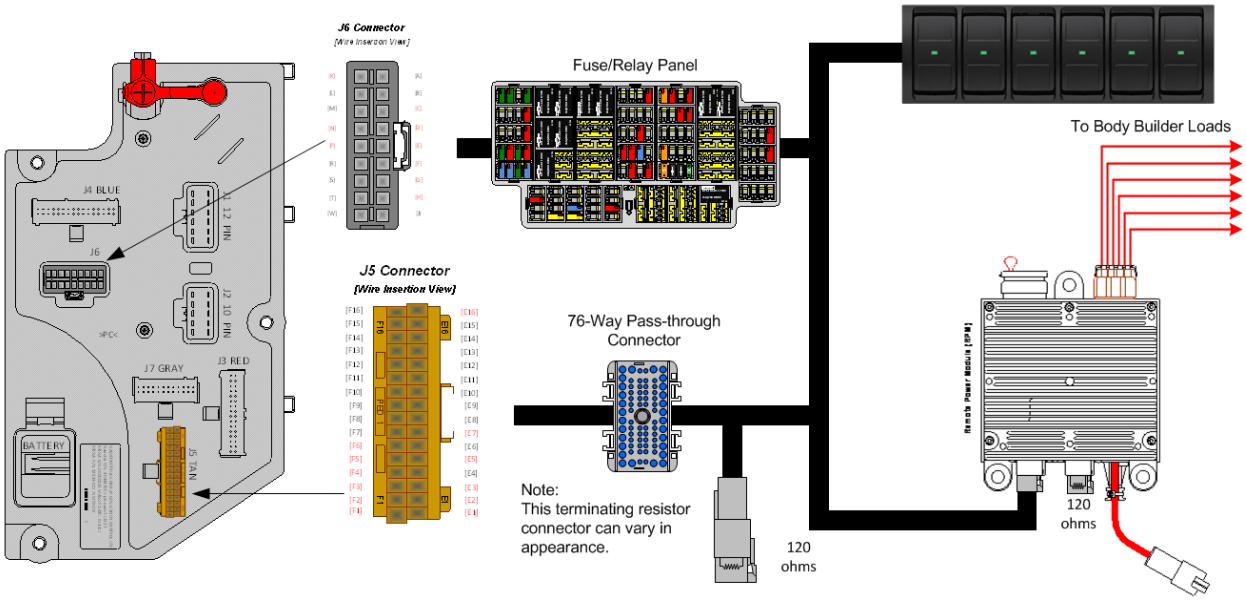

Body Controller Software Feature Codes:

- 597137 - BCM PROG, REMOTE POWER MOD #1

Body Controller Software Feature Code Parameters:

Parameter	ID	Description	Default	Units	Min	Max	Step
597137 - BCM PROG, REMOTE POWER MOD #1							
PwrMod1_Fuse_Level1_Param	392	Current Limit in amps for Output #1 of Remote Power Module #1	20	A	0	20	0.1
PwrMod1_Fuse_Level2_Param	393	Current Limit in amps for Output #2 of Remote Power Module #1	20	A	0	20	0.1
PwrMod1_Fuse_Level3_Param	394	Current Limit in amps for Output #3 of Remote Power Module #1	20	A	0	20	0.1

PwrMod1_Fuse_Level4_Param	395	Current Limit in amps for Output #4 of Remote Power Module #1	20	A	0	20	0.1
PwrMod1_Fuse_Level5_Param	396	Current Limit in amps for Output #5 of Remote Power Module #1	20	A	0	20	0.1
PwrMod1_Fuse_Level6_Param	397	Current Limit in amps for Output #6 of Remote Power Module #1	20	A	0	20	0.1
PwrMod1_Init_State1_Param	398	If this parameter is set to 1, Output #1 of Remote Power Module #1 will be turned on at ignition key-on, if set to 0 output will be off at key-on.	OFF	No Units	N/A	N/A	N/A
PwrMod1_Init_State2_Param	399	If this parameter is set to 1, Output #2 of Remote Power Module #1 will be turned on at ignition key-on, if set to 0 output will be off at key-on.	OFF	No Units	N/A	N/A	N/A
PwrMod1_Init_State3_Param	400	If this parameter is set to 1, Output #3 of Remote Power Module #1 will be turned on at ignition key-on, if set to 0 output will be off at key-on.	OFF	No Units	N/A	N/A	N/A
PwrMod1_Init_State4_Param	401	If this parameter is set to 1, Output #4 of Remote Power Module #1 will be turned on at ignition key-on, if set to 0 output will be off at key-on.	OFF	No Units	N/A	N/A	N/A
PwrMod1_Init_State5_Param	402	If this parameter is set to 1, Output #5 of Remote Power Module #1 will be turned on at ignition key-on, if set to 0 output will be off at key-on.	OFF	No Units	N/A	N/A	N/A
PwrMod1_Init_State6_Param	403	If this parameter is set to 1, Output #6 of Remote Power Module #1 will be turned on at ignition key-on, if set to 0 output will be off at key-on.	OFF	No Units	N/A	N/A	N/A
RPM1_Channel1_Loadshed_Level	3326	This is the level at which the RPM1 channel 1 Output will load shed.	1	No Units	0	3	1
RPM1_Channel2_Loadshed_Level	3327	This is the level at which the RPM1 channel 2 Output will load shed.	1	No Units	0	3	1
RPM1_Channel3_Loadshed_Level	3328	This is the level at which the RPM1 channel 3 Output will load shed.	1	No Units	0	3	1
RPM1_Channel4_Loadshed_Level	3329	This is the level at which the RPM1 channel 4 Output will load shed.	1	No Units	0	3	1
RPM1_Channel5_Loadshed_Level	3330	This is the level at which the RPM1 channel 5 Output will load shed.	1	No Units	0	3	1
RPM1_Channel6_Loadshed_Level	3331	This is the level at which the RPM1 channel 6 Output will load shed.	1	No Units	0	3	1

Parameter Definitions:

- **PwrMod1_Fuse_Level1_Param** – This parameter sets the limit (in AMPS) of the current flowing from Output #1 of RPM #1.
- **PwrMod1_Fuse_Level2_Param** – This parameter sets the limit (in AMPS) of the current flowing from Output #2 of RPM #1.
- **PwrMod1_Fuse_Level3_Param** – This parameter sets the limit (in AMPS) of the current flowing from Output #3 of RPM #1.
- **PwrMod1_Fuse_Level4_Param** – This parameter sets the limit (in AMPS) of the current flowing from Output #4 of RPM #1.

- **PwrMod1_Fuse_Level5_Param** – This parameter sets the limit (in AMPS) of the current flowing from Output #5 of RPM #1.
- **PwrMod1_Fuse_Level6_Param** – This parameter sets the limit (in AMPS) of the current flowing from Output #6 of RPM #1.
- **PwrMod1_Init_State1_Param** – This parameter determines the initial state of RPM#1, Output #1. The Default setting is OFF or zero; meaning output will be OFF at ignition key-on. When the box is checked, the value is set to ON or ONE; the output will be ON at ignition key-on.
- **PwrMod1_Init_State2_Param** – This parameter determines the initial state of RPM#1, Output #2. The Default setting is OFF or zero; meaning output will be OFF at ignition key-on. When the box is checked, the value is set to ON or ONE; the output will be ON at ignition key-on.
- **PwrMod1_Init_State3_Param** – This parameter determines the initial state of RPM#1, Output #3. The Default setting is OFF or zero; meaning output will be OFF at ignition key-on. When the box is checked, the value is set to ON or ONE; the output will be ON at ignition key-on.
- **PwrMod1_Init_State4_Param** – This parameter determines the initial state of RPM#1, Output #4. The Default setting is OFF or zero; meaning output will be OFF at ignition key-on. When the box is checked, the value is set to ON or ONE; the output will be ON at ignition key-on.
- **PwrMod1_Init_State5_Param** – This parameter determines the initial state of RPM#1, Output #5. The Default setting is OFF or zero; meaning output will be OFF at ignition key-on. When the box is checked, the value is set to ON or ONE; the output will be ON at ignition key-on.
- **PwrMod1_Init_State6_Param** – This parameter determines the initial state of RPM#1, Output #6. The Default setting is OFF or zero; meaning output will be OFF at ignition key-on. When the box is checked, the value is set to ON or ONE; the output will be ON at ignition key-on.
- **RPM1_Channel1_LoadShed_Level** – This is the level at which the RPM1 channel 1 Output will load shed. A value of ZERO (0) disables load shed. A value of ONE (1) is least priority (sheds first), a value of 3 highest priority (sheds last).
- **RPM1_Channel2_LoadShed_Level** – This is the level at which the RPM1 channel 2 Output will load shed. A value of ZERO (0) disables load shed. A value of ONE (1) is least priority (sheds first), a value of 3 highest priority (sheds last).
- **RPM1_Channel3_LoadShed_Level** – This is the level at which the RPM1 channel 3 Output will load shed. A value of ZERO (0) disables load shed. A value of ONE (1) is least priority (sheds first), a value of 3 highest priority (sheds last).
- **RPM1_Channel4_LoadShed_Level** – This is the level at which the RPM1 channel 4 Output will load shed. A value of ZERO (0) disables load shed. A value of ONE (1) is least priority (sheds first), a value of 3 highest priority (sheds last).
- **RPM1_Channel5_LoadShed_Level** – This is the level at which the RPM1 channel 5 Output will load shed. A value of ZERO (0) disables load shed. A value of ONE (1) is least priority (sheds first), a value of 3 highest priority (sheds last).

- **RPM1_Channel6_LoadShed_Level** – This is the level at which the RPM1 channel 6 Output will load shed. A value of ZERO (0) disables load shed. A value of ONE (1) is least priority (sheds first), a value of 3 highest priority (sheds last).

Parts Associated with This Feature:
See the list at the beginning of this section.

How to Test This Feature:
1. Turn key to accessory or IGN key state.
2. Activate first in-cab switch.
3. Verify that RPM output #1 is providing battery voltage.
4. Deactivate first in-cab switch.
5. Apply 12V to RPM input #1.
6. Verify that RPM output #1 is providing battery voltage.
7. Apply GND to RPM input #1.
8. Verify that RPM output #1 shuts off.

Continue the above testing procedure for each RPM switch location.

Note: This feature uses body controller-based software controls which can be diagnosed with The International® Diamond Logic® Builder software (see local dealer if not owned).

References:
Refer to the applicable International® Circuit Diagrams and Service Manuals.

26.11. 08VZS: SWITCH, BODY CIRCUITS, MID for Bodybuilder, 12-Switches in Instrument Panel; Two Power Modules with 6 Channels, 20-Amp Max. Per Channel, 80-Amp Max Output, Switches Control Power Module Through Multiplex Wiring, Mounted in Cab Behind Driver Seat.

Feature Applicability to Vehicle Platforms:

- Heavy Vocational (HV)
- Medium Vocational (MV)

Extended Description: Feature 08VZS includes two Remote Power Modules (RPMs) mounted in the cab behind the driver seat. Included with this feature are twelve 3-position momentary switches located in the Instrument Panel. Each RPM output can provide up to 20-Amps maximum with a total of 80-Amps maximum per module.

System Block Diagram:

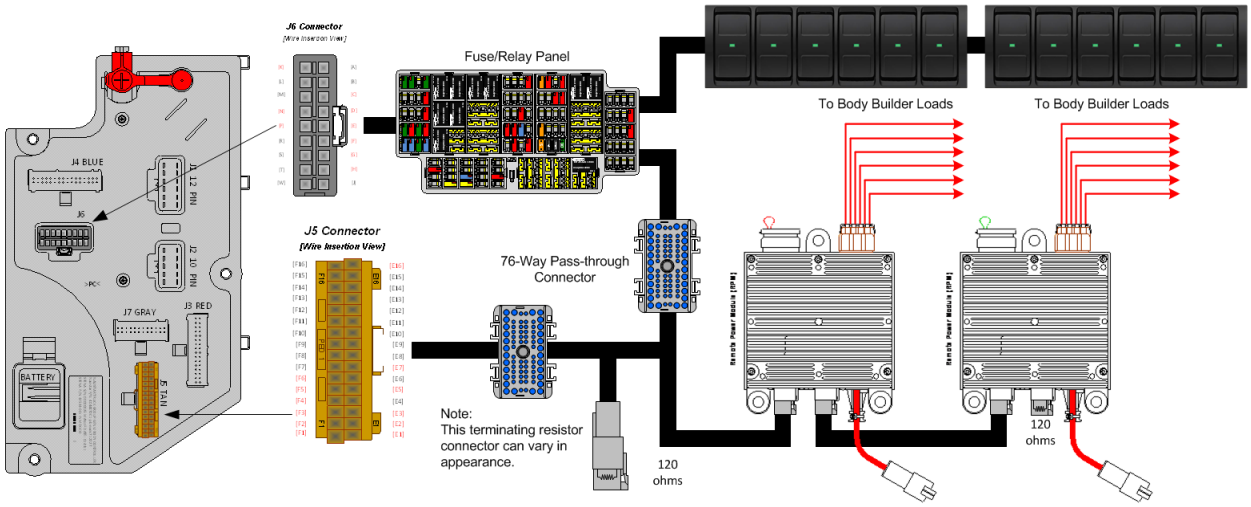

Body Controller Software Feature Codes:

- 597137 - BCM PROG, REMOTE POWER MOD #1
- 597138 - BCM PROG, REMOTE POWER MOD #2
    - Both features are required

Body Controller Software Feature Code Parameters:

Parameter	ID	Description	Default	Units	Min	Max	Step
597137 - BCM PROG, REMOTE POWER MOD #1							
PwrMod1_Fuse_Level1_Param	392	Current Limit in amps for Output #1 of Remote Power Module #1	20	A	0	20	0.1
PwrMod1_Fuse_Level2_Param	393	Current Limit in amps for Output #2 of Remote Power Module #1	20	A	0	20	0.1
PwrMod1_Fuse_Level3_Param	394	Current Limit in amps for Output #3 of Remote Power Module #1	20	A	0	20	0.1
PwrMod1_Fuse_Level4_Param	395	Current Limit in amps for Output #4 of Remote Power Module #1	20	A	0	20	0.1

PwrMod1_Fuse_Level5_Param	396	Current Limit in amps for Output #5 of Remote Power Module #1	20	A	0	20	0.1
PwrMod1_Fuse_Level6_Param	397	Current Limit in amps for Output #6 of Remote Power Module #1	20	A	0	20	0.1
PwrMod1_Init_State1_Param	398	If this parameter is set to 1, Output #1 of Remote Power Module #1 will be turned on at ignition key-on, if set to 0 output will be off at key-on.	OFF	No Units	N/A	N/A	N/A
PwrMod1_Init_State2_Param	399	If this parameter is set to 1, Output #2 of Remote Power Module #1 will be turned on at ignition key-on, if set to 0 output will be off at key-on.	OFF	No Units	N/A	N/A	N/A
PwrMod1_Init_State3_Param	400	If this parameter is set to 1, Output #3 of Remote Power Module #1 will be turned on at ignition key-on, if set to 0 output will be off at key-on.	OFF	No Units	N/A	N/A	N/A
PwrMod1_Init_State4_Param	401	If this parameter is set to 1, Output #4 of Remote Power Module #1 will be turned on at ignition key-on, if set to 0 output will be off at key-on.	OFF	No Units	N/A	N/A	N/A
PwrMod1_Init_State5_Param	402	If this parameter is set to 1, Output #5 of Remote Power Module #1 will be turned on at ignition key-on, if set to 0 output will be off at key-on.	OFF	No Units	N/A	N/A	N/A
PwrMod1_Init_State6_Param	403	If this parameter is set to 1, Output #6 of Remote Power Module #1 will be turned on at ignition key-on, if set to 0 output will be off at key-on.	OFF	No Units	N/A	N/A	N/A
RPM1_Channel1_Loadshed_Level	3326	This is the level at which the RPM1 channel 1 Output will load shed.	1	No Units	0	3	1
RPM1_Channel2_Loadshed_Level	3327	This is the level at which the RPM1 channel 2 Output will load shed.	1	No Units	0	3	1
RPM1_Channel3_Loadshed_Level	3328	This is the level at which the RPM1 channel 3 Output will load shed.	1	No Units	0	3	1
RPM1_Channel4_Loadshed_Level	3329	This is the level at which the RPM1 channel 4 Output will load shed.	1	No Units	0	3	1
RPM1_Channel5_Loadshed_Level	3330	This is the level at which the RPM1 channel 5 Output will load shed.	1	No Units	0	3	1
RPM1_Channel6_Loadshed_Level	3331	This is the level at which the RPM1 channel 6 Output will load shed.	1	No Units	0	3	1
597138 - BCM PROG, REMOTE POWER MOD #2							
PwrMod2_Fuse_Level1_Param	035	Current Limit in amps for Output #1 of Remote Power Module #2	20	A	0	20	0.1
PwrMod2_Fuse_Level2_Param	036	Current Limit in amps for Output #2 of Remote Power Module #2	20	A	0	20	0.1
PwrMod2_Fuse_Level3_Param	037	Current Limit in amps for Output #3 of Remote Power Module #2	20	A	0	20	0.1
PwrMod2_Fuse_Level4_Param	038	Current Limit in amps for Output #4 of Remote Power Module #2	20	A	0	20	0.1
PwrMod2_Fuse_Level5_Param	039	Current Limit in amps for Output #5 of Remote Power Module #2	20	A	0	20	0.1
PwrMod2_Fuse_Level6_Param	040	Current Limit in amps for Output #6 of Remote Power Module #2	20	A	0	20	0.1
PwrMod2_Init_State1_Param	041	If this parameter is set to 1, Output #1 of Remote Power Module #2 will be turned on at ignition key-on, if set to 0 output will be off at key-on.	OFF	No Units	N/A	N/A	N/A

PwrMod2_Init_State2_Param	042	If this parameter is set to 1, Output #2 of Remote Power Module #2 will be turned on at ignition key-on, if set to 0 output will be off at key-on.	OFF	No Units	N/A	N/A	N/A
PwrMod2_Init_State3_Param	043	If this parameter is set to 1, Output #3 of Remote Power Module #2 will be turned on at ignition key-on, if set to 0 output will be off at key-on.	OFF	No Units	N/A	N/A	N/A
PwrMod2_Init_State4_Param	044	If this parameter is set to 1, Output #4 of Remote Power Module #2 will be turned on at ignition key-on, if set to 0 output will be off at key-on.	OFF	No Units	N/A	N/A	N/A
PwrMod2_Init_State5_Param	045	If this parameter is set to 1, Output #5 of Remote Power Module #2 will be turned on at ignition key-on, if set to 0 output will be off at key-on.	OFF	No Units	N/A	N/A	N/A
PwrMod2_Init_State6_Param	046	If this parameter is set to 1, Output #6 of Remote Power Module #2 will be turned on at ignition key-on, if set to 0 output will be off at key-on.	OFF	No Units	N/A	N/A	N/A
RPM2_Channel1_Loadshed_Level	3333	This is the level at which the RPM2 channel 1 Output will load shed.	1	No Units	0	3	1
RPM2_Channel2_Loadshed_Level	3334	This is the level at which the RPM2 channel 2 Output will load shed.	1	No Units	0	3	1
RPM2_Channel3_Loadshed_Level	3335	This is the level at which the RPM2 channel 3 Output will load shed.	1	No Units	0	3	1
RPM2_Channel4_Loadshed_Level	3336	This is the level at which the RPM2 channel 4 Output will load shed.	1	No Units	0	3	1
RPM2_Channel5_Loadshed_Level	3337	This is the level at which the RPM2 channel 5 Output will load shed.	1	No Units	0	3	1
RPM2_Channel6_Loadshed_Level	3338	This is the level at which the RPM2 channel 6 Output will load shed.	1	No Units	0	3	1

Parameter Definitions:

- **PwrMod1_Fuse_Level1_Param** – This parameter sets the limit (in AMPS) of the current flowing from Output #1 of RPM #1.
- **PwrMod1_Fuse_Level2_Param** – This parameter sets the limit (in AMPS) of the current flowing from Output #2 of RPM #1.
- **PwrMod1_Fuse_Level3_Param** – This parameter sets the limit (in AMPS) of the current flowing from Output #3 of RPM #1.
- **PwrMod1_Fuse_Level4_Param** – This parameter sets the limit (in AMPS) of the current flowing from Output #4 of RPM #1.
- **PwrMod1_Fuse_Level5_Param** – This parameter sets the limit (in AMPS) of the current flowing from Output #5 of RPM #1.
- **PwrMod1_Fuse_Level6_Param** – This parameter sets the limit (in AMPS) of the current flowing from Output #6 of RPM #1.
- **PwrMod1_Init_State1_Param** – This parameter determines the initial state of RPM#1, Output #1. The Default setting is OFF or zero; meaning output will be OFF at ignition key-on. When the box is checked, the value is set to ON or ONE; the output will be ON at ignition key-on.

- **PwrMod1_Init_State2_Param** – This parameter determines the initial state of RPM#1, Output #2. The Default setting is OFF or zero; meaning output will be OFF at ignition key-on. When the box is checked, the value is set to ON or ONE; the output will be ON at ignition key-on.
- **PwrMod1_Init_State3_Param** – This parameter determines the initial state of RPM#1, Output #3. The Default setting is OFF or zero; meaning output will be OFF at ignition key-on. When the box is checked, the value is set to ON or ONE; the output will be ON at ignition key-on.
- **PwrMod1_Init_State4_Param** – This parameter determines the initial state of RPM#1, Output #4. The Default setting is OFF or zero; meaning output will be OFF at ignition key-on. When the box is checked, the value is set to ON or ONE; the output will be ON at ignition key-on.
- **PwrMod1_Init_State5_Param** – This parameter determines the initial state of RPM#1, Output #5. The Default setting is OFF or zero; meaning output will be OFF at ignition key-on. When the box is checked, the value is set to ON or ONE; the output will be ON at ignition key-on.
- **PwrMod1_Init_State6_Param** – This parameter determines the initial state of RPM#1, Output #6. The Default setting is OFF or zero; meaning output will be OFF at ignition key-on. When the box is checked, the value is set to ON or ONE; the output will be ON at ignition key-on.
- **RPM1_Channel1_LoadShed_Level** – This is the level at which the RPM1 channel 1 Output will load shed. A value of ZERO (0) disables load shed. A value of ONE (1) is least priority (sheds first), a value of 3 highest priority (sheds last).
- **RPM1_Channel2_LoadShed_Level** – This is the level at which the RPM1 channel 2 Output will load shed. A value of ZERO (0) disables load shed. A value of ONE (1) is least priority (sheds first), a value of 3 highest priority (sheds last).
- **RPM1_Channel3_LoadShed_Level** – This is the level at which the RPM1 channel 3 Output will load shed. A value of ZERO (0) disables load shed. A value of ONE (1) is least priority (sheds first), a value of 3 highest priority (sheds last).
- **RPM1_Channel4_LoadShed_Level** – This is the level at which the RPM1 channel 4 Output will load shed. A value of ZERO (0) disables load shed. A value of ONE (1) is least priority (sheds first), a value of 3 highest priority (sheds last).
- **RPM1_Channel5_LoadShed_Level** – This is the level at which the RPM1 channel 5 Output will load shed. A value of ZERO (0) disables load shed. A value of ONE (1) is least priority (sheds first), a value of 3 highest priority (sheds last).
- **RPM1_Channel6_LoadShed_Level** – This is the level at which the RPM1 channel 6 Output will load shed. A value of ZERO (0) disables load shed. A value of ONE (1) is least priority (sheds first), a value of 3 highest priority (sheds last).
-
- **PwrMod2_Fuse_Level1_Param** – This parameter sets the limit (in AMPS) of the current flowing from Output #1 of RPM #2.
- **PwrMod2_Fuse_Level2_Param** – This parameter sets the limit (in AMPS) of the current flowing from Output #2 of RPM #2.

- **PwrMod2_Fuse_Level3_Param** – This parameter sets the limit (in AMPS) of the current flowing from Output #3 of RPM #2.
- **PwrMod2_Fuse_Level4_Param** – This parameter sets the limit (in AMPS) of the current flowing from Output #4 of RPM #2.
- **PwrMod2_Fuse_Level5_Param** – This parameter sets the limit (in AMPS) of the current flowing from Output #5 of RPM #2.
- **PwrMod2_Fuse_Level6_Param** – This parameter sets the limit (in AMPS) of the current flowing from Output #6 of RPM #2.
- **PwrMod2_Init_State1_Param** – This parameter determines the initial state of RPM#2, Output #1. The Default setting is OFF or zero; meaning output will be OFF at ignition key-on. When the box is checked, the value is set to ON or ONE; the output will be ON at ignition key-on.
- **PwrMod2_Init_State2_Param** – This parameter determines the initial state of RPM#2, Output #2. The Default setting is OFF or zero; meaning output will be OFF at ignition key-on. When the box is checked, the value is set to ON or ONE; the output will be ON at ignition key-on.
- **PwrMod2_Init_State3_Param** – This parameter determines the initial state of RPM#2, Output #3. The Default setting is OFF or zero; meaning output will be OFF at ignition key-on. When the box is checked, the value is set to ON or ONE; the output will be ON at ignition key-on.
- **PwrMod2_Init_State4_Param** – This parameter determines the initial state of RPM#2, Output #4. The Default setting is OFF or zero; meaning output will be OFF at ignition key-on. When the box is checked, the value is set to ON or ONE; the output will be ON at ignition key-on.
- **PwrMod2_Init_State5_Param** – This parameter determines the initial state of RPM#2, Output #5. The Default setting is OFF or zero; meaning output will be OFF at ignition key-on. When the box is checked, the value is set to ON or ONE; the output will be ON at ignition key-on.
- **PwrMod2_Init_State6_Param** – This parameter determines the initial state of RPM#2, Output #6. The Default setting is OFF or zero; meaning output will be OFF at ignition key-on. When the box is checked, the value is set to ON or ONE; the output will be ON at ignition key-on.
- **RPM2_Channel1_LoadShed_Level** – This is the level at which the RPM2 channel 1 Output will load shed. A value of ZERO (0) disables load shed. A value of ONE (1) is least priority (sheds first), a value of 3 highest priority (sheds last).
- **RPM2_Channel2_LoadShed_Level** – This is the level at which the RPM2 channel 2 Output will load shed. A value of ZERO (0) disables load shed. A value of ONE (1) is least priority (sheds first), a value of 3 highest priority (sheds last).
- **RPM2_Channel3_LoadShed_Level** – This is the level at which the RPM2 channel 3 Output will load shed. A value of ZERO (0) disables load shed. A value of ONE (1) is least priority (sheds first), a value of 3 highest priority (sheds last).
- **RPM2_Channel4_LoadShed_Level** – This is the level at which the RPM2 channel 4 Output will load shed. A value of ZERO (0) disables load shed. A value of ONE (1) is least priority (sheds first), a value of 3 highest priority (sheds last).

- **RPM2_Channel5_LoadShed_Level** – This is the level at which the RPM2 channel 5 Output will load shed. A value of ZERO (0) disables load shed. A value of ONE (1) is least priority (sheds first), a value of 3 highest priority (sheds last).
- **RPM2_Channel6_LoadShed_Level** – This is the level at which the RPM2 channel 6 Output will load shed. A value of ZERO (0) disables load shed. A value of ONE (1) is least priority (sheds first), a value of 3 highest priority (sheds last).

Parts Associated with This Feature:
See the list at the beginning of this section.

How to Test This Feature:
1. Turn key to accessory or IGN key state.
2. Activate first in-cab switch.
3. Verify that RPM output #1 is providing battery voltage.
4. Deactivate first in-cab switch.
5. Apply 12V to RPM input #1.
6. Verify that RPM output #1 is providing battery voltage.
7. Apply GND to RPM input #1.
8. Verify that RPM output #1 shuts off.

Continue the above testing procedure for each RPM switch location.

Note: This feature uses body controller-based software controls which can be diagnosed with The International® Diamond Logic® Builder software (see local dealer if not owned).

References:
Refer to the applicable International® Circuit Diagrams and Service Manuals.

26.12. 08WSK: SWITCH, BODY CIRCUITS, REAR for Body Builder; With Six Momentary Switches in Instrument Panel (IP); One Power Module, With Six Channels, 20-Ampere (AMP) per Channel and 80 AMP Max. Output, Switches Control the Power Modules through Multiplex Wiring, Mounted at Rear on Frame.

Feature Applicability to Vehicle Platforms:

- Heavy Vocational (HV)
- Medium Vocational (MV)

Extended Description: Feature 08WSK includes one Remote Power Module (RPM) mounted at the End of Frame (EOF). Included with this feature are six 3-position momentary switches located in the Instrument Panel. Each RPM output can provide up to 20-Amps maximum with a total of 80-Amps maximum per module.

System Block Diagram:

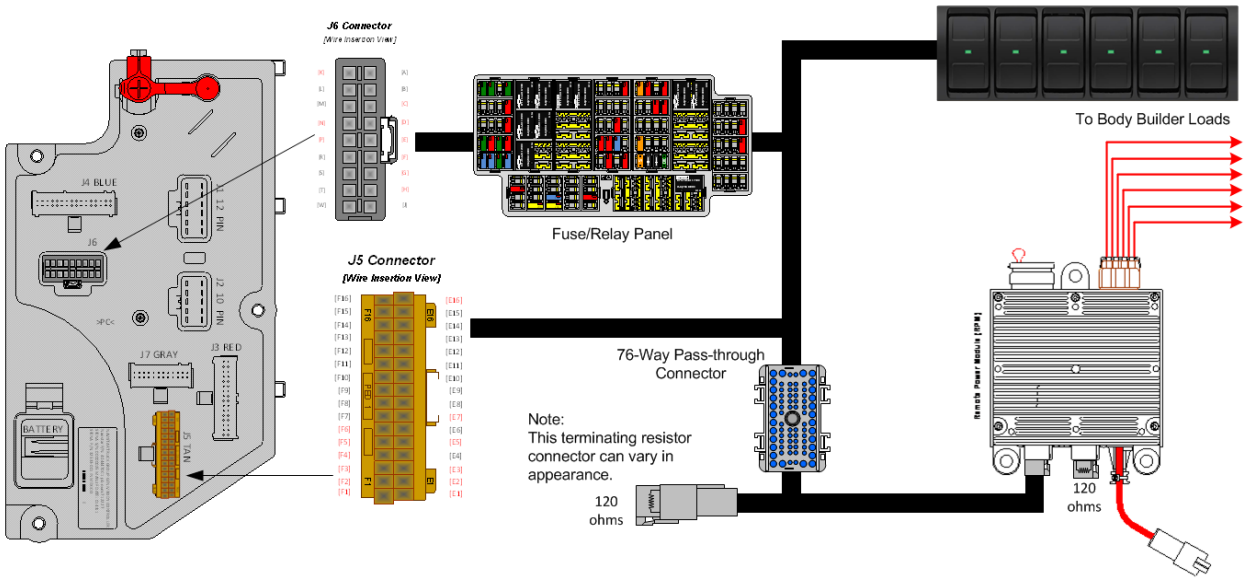

Body Controller Software Feature Codes:

- 597139 - BCM PROG, REMOTE POWER MOD #4

Body Controller Software Feature Code Parameters:

Parameter	ID	Description	Default	Units	Min	Max	Step
597139 - BCM PROG, REMOTE POWER MOD #4							
PwrMod4_Fuse_Level1_Param	454	Current Limit in amps for Output #1 of Remote Power Module #4	20	A	0	20	0.1
PwrMod4_Fuse_Level2_Param	455	Current Limit in amps for Output #2 of Remote Power Module #4	20	A	0	20	0.1
PwrMod4_Fuse_Level3_Param	456	Current Limit in amps for Output #3 of Remote Power Module #4	20	A	0	20	0.1
PwrMod4_Fuse_Level4_Param	457	Current Limit in amps for Output #4 of Remote Power Module #4	20	A	0	20	0.1

PwrMod4_Fuse_Level5_Param	458	Current Limit in amps for Output #5 of Remote Power Module #4	20	A	0	20	0.1
PwrMod4_Fuse_Level6_Param	459	Current Limit in amps for Output #6 of Remote Power Module #4	20	A	0	20	0.1
PwrMod4_Init_State1_Param	460	If this parameter is set to 1, Output #1 of Remote Power Module #4 will be turned on at ignition key-on, if set to 0 output will be off at key-on.	OFF	No Units	N/A	N/A	N/A
PwrMod4_Init_State2_Param	461	If this parameter is set to 1, Output #2 of Remote Power Module #4 will be turned on at ignition key-on, if set to 0 output will be off at key-on.	OFF	No Units	N/A	N/A	N/A
PwrMod4_Init_State3_Param	462	If this parameter is set to 1, Output #3 of Remote Power Module #4 will be turned on at ignition key-on, if set to 0 output will be off at key-on.	OFF	No Units	N/A	N/A	N/A
PwrMod4_Init_State4_Param	463	If this parameter is set to 1, Output #4 of Remote Power Module #4 will be turned on at ignition key-on, if set to 0 output will be off at key-on.	OFF	No Units	N/A	N/A	N/A
PwrMod4_Init_State5_Param	464	If this parameter is set to 1, Output #5 of Remote Power Module #4 will be turned on at ignition key-on, if set to 0 output will be off at key-on.	OFF	No Units	N/A	N/A	N/A
PwrMod4_Init_State6_Param	465	If this parameter is set to 1, Output #6 of Remote Power Module #4 will be turned on at ignition key-on, if set to 0 output will be off at key-on.	OFF	No Units	N/A	N/A	N/A
RPM4_Channel1_Loadshed_Level	3320	This is the level at which the RPM4 channel 1 Output will load shed.	1	No Units	0	3	1
RPM4_Channel2_Loadshed_Level	3321	This is the level at which the RPM4 channel 2 Output will load shed.	1	No Units	0	3	1
RPM4_Channel3_Loadshed_Level	3322	This is the level at which the RPM4 channel 3 Output will load shed.	1	No Units	0	3	1
RPM4_Channel4_Loadshed_Level	3323	This is the level at which the RPM4 channel 4 Output will load shed.	1	No Units	0	3	1
RPM4_Channel5_Loadshed_Level	3324	This is the level at which the RPM4 channel 5 Output will load shed.	1	No Units	0	3	1
RPM4_Channel6_Loadshed_Level	3325	This is the level at which the RPM4 channel 6 Output will load shed.	1	No Units	0	3	1

Parameter Definitions:

- **PwrMod4_Fuse_Level1_Param** – This parameter sets the limit (in AMPS) of the current flowing from Output #1 of RPM #4.
- **PwrMod4_Fuse_Level2_Param** – This parameter sets the limit (in AMPS) of the current flowing from Output #2 of RPM #4.
- **PwrMod4_Fuse_Level3_Param** – This parameter sets the limit (in AMPS) of the current flowing from Output #3 of RPM #4.
- **PwrMod4_Fuse_Level4_Param** – This parameter sets the limit (in AMPS) of the current flowing from Output #4 of RPM #4.
- **PwrMod4_Fuse_Level5_Param** – This parameter sets the limit (in AMPS) of the current flowing from Output #5 of RPM #4.

- **PwrMod4_Fuse_Level6_Param** – This parameter sets the limit (in AMPS) of the current flowing from Output #6 of RPM #4.
- **PwrMod4_Init_State1_Param** – This parameter determines the initial state of RPM#4, Output #1. The Default setting is OFF or zero; meaning output will be OFF at ignition key-on. When the box is checked, the value is set to ON or ONE; the output will be ON at ignition key-on.
- **PwrMod4_Init_State2_Param** – This parameter determines the initial state of RPM#4, Output #2. The Default setting is OFF or zero; meaning output will be OFF at ignition key-on. When the box is checked, the value is set to ON or ONE; the output will be ON at ignition key-on.
- **PwrMod4_Init_State3_Param** – This parameter determines the initial state of RPM#4, Output #3. The Default setting is OFF or zero; meaning output will be OFF at ignition key-on. When the box is checked, the value is set to ON or ONE; the output will be ON at ignition key-on.
- **PwrMod4_Init_State4_Param** – This parameter determines the initial state of RPM#4, Output #4. The Default setting is OFF or zero; meaning output will be OFF at ignition key-on. When the box is checked, the value is set to ON or ONE; the output will be ON at ignition key-on.
- **PwrMod4_Init_State5_Param** – This parameter determines the initial state of RPM#4, Output #5. The Default setting is OFF or zero; meaning output will be OFF at ignition key-on. When the box is checked, the value is set to ON or ONE; the output will be ON at ignition key-on.
- **PwrMod4_Init_State6_Param** – This parameter determines the initial state of RPM#4, Output #6. The Default setting is OFF or zero; meaning output will be OFF at ignition key-on. When the box is checked, the value is set to ON or ONE; the output will be ON at ignition key-on.
- **RPM4_Channel1_LoadShed_Level** – This is the level at which the RPM4 channel 1 Output will load shed. A value of ZERO (0) disables load shed. A value of ONE (1) is least priority (sheds first), a value of 3 highest priority (sheds last).
- **RPM4_Channel2_LoadShed_Level** – This is the level at which the RPM4 channel 2 Output will load shed. A value of ZERO (0) disables load shed. A value of ONE (1) is least priority (sheds first), a value of 3 highest priority (sheds last).
- **RPM4_Channel3_LoadShed_Level** – This is the level at which the RPM4 channel 3 Output will load shed. A value of ZERO (0) disables load shed. A value of ONE (1) is least priority (sheds first), a value of 3 highest priority (sheds last).
- **RPM4_Channel4_LoadShed_Level** – This is the level at which the RPM4 channel 4 Output will load shed. A value of ZERO (0) disables load shed. A value of ONE (1) is least priority (sheds first), a value of 3 highest priority (sheds last).
- **RPM4_Channel5_LoadShed_Level** – This is the level at which the RPM4 channel 5 Output will load shed. A value of ZERO (0) disables load shed. A value of ONE (1) is least priority (sheds first), a value of 3 highest priority (sheds last).
- **RPM4_Channel6_LoadShed_Level** – This is the level at which the RPM4 channel 6 Output will load shed. A value of ZERO (0) disables load shed. A value of ONE (1) is least priority (sheds first), a value of 3 highest priority (sheds last).

Note/s About Possible Software Feature Conflicts:
597252

Parts Associated with This Feature:
See the list at the beginning of this section.

How to Test This Feature:
1. Turn key to accessory or IGN key state.
2. Activate first in-cab switch.
3. Verify that RPM output #1 is providing battery voltage.
4. Deactivate first in-cab switch.
5. Apply 12V to RPM input #1.
6. Verify that RPM output #1 is providing battery voltage.
7. Apply GND to RPM input #1.
8. Verify that RPM output #1 shuts off.

Continue the above testing procedure for each RPM switch location.

Note: This feature uses body controller-based software controls which can be diagnosed with The International® Diamond Logic® Builder software (see local dealer if not owned).

References:
Refer to the applicable International® Circuit Diagrams and Service Manuals.

26.13. 08WSM: SWITCH, BODY CIRCUITS, MID for Body Builder, With Six Momentary Switches in IP; One Power Module with Six Channel, 20-AMP Max. per Channel and 80 AMP Max. Output, Switches Control the Power Module through Multiplex Wiring, Mounted Battery Box, Back of Cab (BOC).

Feature Applicability to Vehicle Platforms:

- Heavy Vocational (HV)
- Medium Vocational (MV)

Extended Description: Feature 08WSM includes one Remote Power Module (RPM) mounted behind the battery box on MV or on a bracket under the cab on HV at the Back of Cab (BOC). Included with this feature are six 3-position momentary switches located in the Instrument Panel. Each RPM output can provide up to 20-Amps maximum with a total of 80-Amps maximum per module.

System Block Diagram:

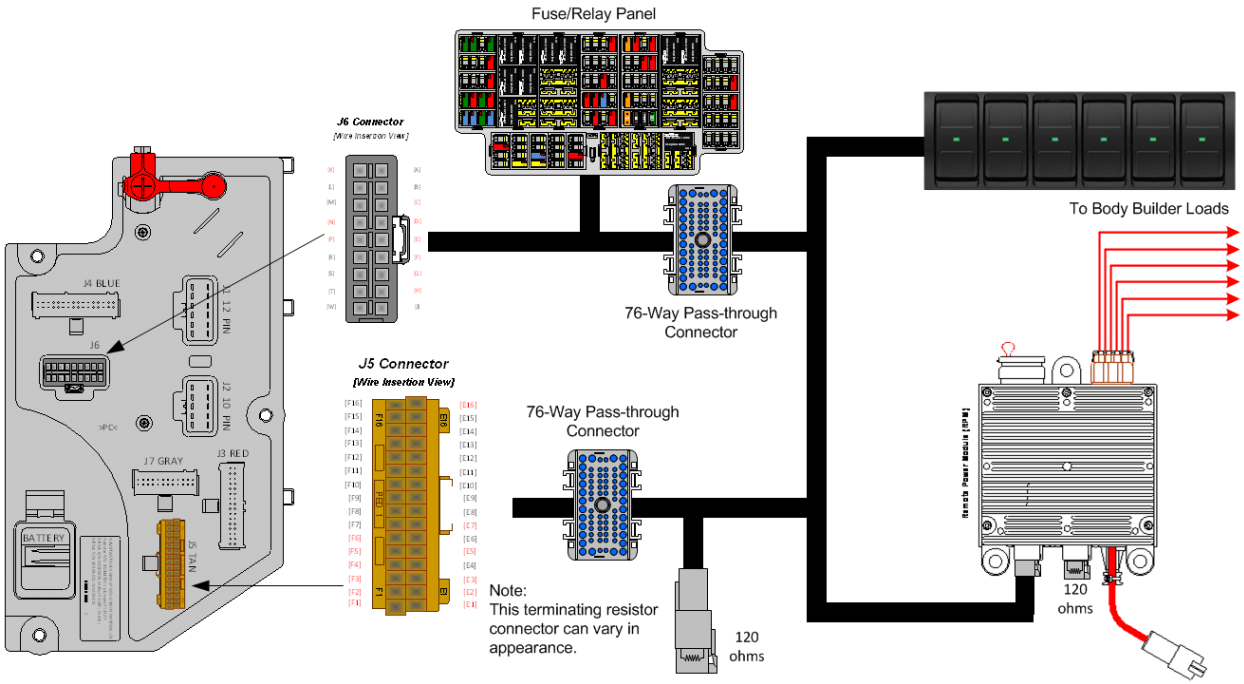

Body Controller Software Feature Codes:

- 597137 - BCM PROG, REMOTE POWER MOD #1

Body Controller Software Feature Code Parameters:

Parameter	ID	Description	Default	Units	Min	Max	Step
597137 - BCM PROG, REMOTE POWER MOD #1							
PwrMod1_Fuse_Level1_Param	392	Current Limit in amps for Output #1 of Remote Power Module #1	20	A	0	20	0.1

PwrMod1_Fuse_Level2_Param	393	Current Limit in amps for Output #2 of Remote Power Module #1	20	A	0	20	0.1
PwrMod1_Fuse_Level3_Param	394	Current Limit in amps for Output #3 of Remote Power Module #1	20	A	0	20	0.1
PwrMod1_Fuse_Level4_Param	395	Current Limit in amps for Output #4 of Remote Power Module #1	20	A	0	20	0.1
PwrMod1_Fuse_Level5_Param	396	Current Limit in amps for Output #5 of Remote Power Module #1	20	A	0	20	0.1
PwrMod1_Fuse_Level6_Param	397	Current Limit in amps for Output #6 of Remote Power Module #1	20	A	0	20	0.1
PwrMod1_Init_State1_Param	398	If this parameter is set to 1, Output #1 of Remote Power Module #1 will be turned on at ignition key-on, if set to 0 output will be off at key-on.	OFF	No Units	N/A	N/A	N/A
PwrMod1_Init_State2_Param	399	If this parameter is set to 1, Output #2 of Remote Power Module #1 will be turned on at ignition key-on, if set to 0 output will be off at key-on.	OFF	No Units	N/A	N/A	N/A
PwrMod1_Init_State3_Param	400	If this parameter is set to 1, Output #3 of Remote Power Module #1 will be turned on at ignition key-on, if set to 0 output will be off at key-on.	OFF	No Units	N/A	N/A	N/A
PwrMod1_Init_State4_Param	401	If this parameter is set to 1, Output #4 of Remote Power Module #1 will be turned on at ignition key-on, if set to 0 output will be off at key-on.	OFF	No Units	N/A	N/A	N/A
PwrMod1_Init_State5_Param	402	If this parameter is set to 1, Output #5 of Remote Power Module #1 will be turned on at ignition key-on, if set to 0 output will be off at key-on.	OFF	No Units	N/A	N/A	N/A
PwrMod1_Init_State6_Param	403	If this parameter is set to 1, Output #6 of Remote Power Module #1 will be turned on at ignition key-on, if set to 0 output will be off at key-on.	OFF	No Units	N/A	N/A	N/A
RPM1_Channel1_Loadshed_Level	3326	This is the level at which the RPM1 channel 1 Output will load shed.	1	No Units	0	3	1
RPM1_Channel2_Loadshed_Level	3327	This is the level at which the RPM1 channel 2 Output will load shed.	1	No Units	0	3	1
RPM1_Channel3_Loadshed_Level	3328	This is the level at which the RPM1 channel 3 Output will load shed.	1	No Units	0	3	1
RPM1_Channel4_Loadshed_Level	3329	This is the level at which the RPM1 channel 4 Output will load shed.	1	No Units	0	3	1
RPM1_Channel5_Loadshed_Level	3330	This is the level at which the RPM1 channel 5 Output will load shed.	1	No Units	0	3	1
RPM1_Channel6_Loadshed_Level	3331	This is the level at which the RPM1 channel 6 Output will load shed.	1	No Units	0	3	1

Parameter Definitions:

- **PwrMod1_Fuse_Level1_Param** – This parameter sets the limit (in AMPS) of the current flowing from Output #1 of RPM #1.
- **PwrMod1_Fuse_Level2_Param** – This parameter sets the limit (in AMPS) of the current flowing from Output #2 of RPM #1.
- **PwrMod1_Fuse_Level3_Param** – This parameter sets the limit (in AMPS) of the current flowing from Output #3 of RPM #1.

- **PwrMod1_Fuse_Level4_Param** – This parameter sets the limit (in AMPS) of the current flowing from Output #4 of RPM #1.
- **PwrMod1_Fuse_Level5_Param** – This parameter sets the limit (in AMPS) of the current flowing from Output #5 of RPM #1.
- **PwrMod1_Fuse_Level6_Param** – This parameter sets the limit (in AMPS) of the current flowing from Output #6 of RPM #1.
- **PwrMod1_Init_State1_Param** – This parameter determines the initial state of RPM#1, Output #1. The Default setting is OFF or zero; meaning output will be OFF at ignition key-on. When the box is checked, the value is set to ON or ONE; the output will be ON at ignition key-on.
- **PwrMod1_Init_State2_Param** – This parameter determines the initial state of RPM#1, Output #2. The Default setting is OFF or zero; meaning output will be OFF at ignition key-on. When the box is checked, the value is set to ON or ONE; the output will be ON at ignition key-on.
- **PwrMod1_Init_State3_Param** – This parameter determines the initial state of RPM#1, Output #3. The Default setting is OFF or zero; meaning output will be OFF at ignition key-on. When the box is checked, the value is set to ON or ONE; the output will be ON at ignition key-on.
- **PwrMod1_Init_State4_Param** – This parameter determines the initial state of RPM#1, Output #4. The Default setting is OFF or zero; meaning output will be OFF at ignition key-on. When the box is checked, the value is set to ON or ONE; the output will be ON at ignition key-on.
- **PwrMod1_Init_State5_Param** – This parameter determines the initial state of RPM#1, Output #5. The Default setting is OFF or zero; meaning output will be OFF at ignition key-on. When the box is checked, the value is set to ON or ONE; the output will be ON at ignition key-on.
- **PwrMod1_Init_State6_Param** – This parameter determines the initial state of RPM#1, Output #6. The Default setting is OFF or zero; meaning output will be OFF at ignition key-on. When the box is checked, the value is set to ON or ONE; the output will be ON at ignition key-on.
- **RPM1_Channel1_LoadShed_Level** – This is the level at which the RPM1 channel 1 Output will load shed. A value of ZERO (0) disables load shed. A value of ONE (1) is least priority (sheds first), a value of 3 highest priority (sheds last).
- **RPM1_Channel2_LoadShed_Level** – This is the level at which the RPM1 channel 2 Output will load shed. A value of ZERO (0) disables load shed. A value of ONE (1) is least priority (sheds first), a value of 3 highest priority (sheds last).
- **RPM1_Channel3_LoadShed_Level** – This is the level at which the RPM1 channel 3 Output will load shed. A value of ZERO (0) disables load shed. A value of ONE (1) is least priority (sheds first), a value of 3 highest priority (sheds last).
- **RPM1_Channel4_LoadShed_Level** – This is the level at which the RPM1 channel 4 Output will load shed. A value of ZERO (0) disables load shed. A value of ONE (1) is least priority (sheds first), a value of 3 highest priority (sheds last).

- **RPM1_Channel5_LoadShed_Level** – This is the level at which the RPM1 channel 5 Output will load shed. A value of ZERO (0) disables load shed. A value of ONE (1) is least priority (sheds first), a value of 3 highest priority (sheds last).
- **RPM1_Channel6_LoadShed_Level** – This is the level at which the RPM1 channel 6 Output will load shed. A value of ZERO (0) disables load shed. A value of ONE (1) is least priority (sheds first), a value of 3 highest priority (sheds last).

Parts Associated with This Feature:
See the list at the beginning of this section.

How to Test This Feature:
1. Turn key to accessory or IGN key state.
2. Activate first in-cab switch.
3. Verify that RPM output #1 is providing battery voltage.
4. Deactivate first in-cab switch.
5. Apply 12V to RPM input #1.
6. Verify that RPM output #1 is providing battery voltage.
7. Apply GND to RPM input #1.
8. Verify that RPM output #1 shuts off.

Continue the above testing procedure for each RPM switch location.

Note: This feature uses body controller-based software controls which can be diagnosed with The International® Diamond Logic® Builder software (see local dealer if not owned).

References:
Refer to the applicable International® Circuit Diagrams and Service Manuals.

26.14. 60AAA: BDY INTG, RPM Mounted Under Cab; Up to Six Outputs and Six Inputs, Max. 20-AMP per Channel, Max. 80-AMP Total (Includes One Switch Pack with Latched Switches) Mounted on Battery Box, BOC.

Feature Applicability to Vehicle Platforms:

- Heavy Vocational (HV)
- Medium Vocational (MV)
- Heavy Extreme (HX) 2021 and Newer

Extended Description: Feature 60AAA includes one Remote Power Module (RPM) mounted behind the battery box on MV or on a bracket under cab on HV at Back of Cab (BOC). Included with this feature are six 2-position latched switches located in the Instrument Panel. Each RPM output can provide up to 20-Amps maximum with a total of 80-Amps maximum per module.

System Block Diagram:

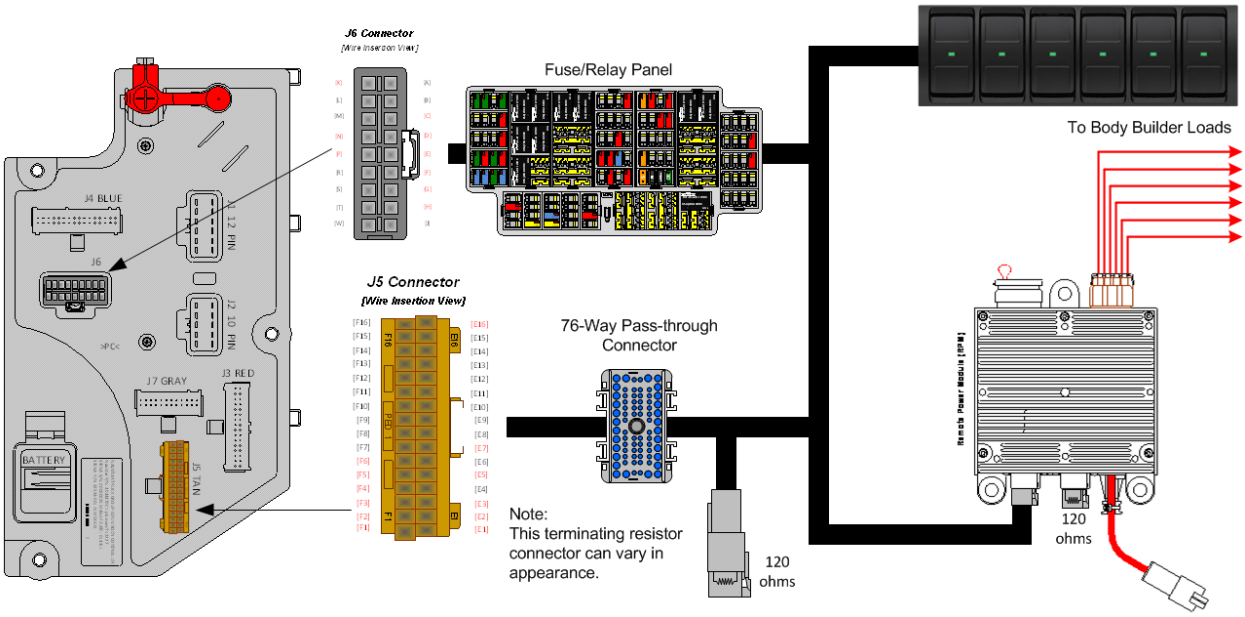

Body Controller Software Feature Codes:

Note: Feature code 60AAA is configured by special unadvertised software feature codes. These codes are determined by the number of additional features that use the RPM resources. The following codes should be added after all other features are added to the vehicle.
60ACA = 597194 – This feature should be added if there are features already using five RPM inputs/outputs. (BCM PROG, AUXILIARY LOAD #1)
60ACB = 597195 – This feature should be added if there are features already using four RPM inputs/outputs. (BCM PROG, AUXILIARY LOAD 2 ROCKER SW)

60ACC = 597196 – This feature should be added if there are features already using three RPM inputs/outputs. (BCM PROG, AUXILIARY LOAD 3 ROCKER SW)
60ACD = 597197 – This feature should be added if there are features already using two RPM inputs/outputs. (BCM PROG, AUXILIARY LOAD 4 ROCKER SW)
60ACJ = 597198 – This feature should be added if there are features already using one RPM input/output. (BCM PROG, AUXILIARY LOAD 5 ROCKER SW)
60ACK = 597199 – This feature should be added if there no other features using any RPM inputs/outputs. (BCM PROG, AUXILIARY LOAD 6 ROCKER SW)

Body Controller Software Feature Code Parameters:

Parameter	ID	Description	Default	Units	Min	Max	Step
597194 - BCM PROG, AUXILIARY LOAD #1 For Rocker Switch							
TEM_Aux1_Output_Fuse_Param	1990	This is the maximum current Aux 1 Output can source before the virtual fusing turns the output off.	20	A	0	20	0.1
TEM_Aux1_Loadshed_Level	3273	Loadshed level parameter for TEM Aux Switch 1	1	No Units	0	3	1
597195 - BCM PROG, AUXILIARY LOAD For (2) Rocker Switch							
TEM_Aux1_Output_Fuse_Param	1990	This is the maximum current Aux 1 Output can source before the virtual fusing turns the output off.	20	A	0	20	0.1
TEM_Aux2_Output_Fuse_Param	1991	This is the maximum current Aux 2 Output can source before the virtual fusing turns the output off.	20	A	0	20	0.1
TEM_Aux1_Loadshed_Level	3273	Loadshed level parameter for TEM Aux Switch 1	1	No Units	0	3	1
TEM_Aux2_Loadshed_Level	3274	Loadshed level parameter for TEM Aux Switch 2	1	No Units	0	3	1
597196 - BCM PROG, AUXILIARY LOAD For (3) Rocker Switch							
TEM_Aux1_Output_Fuse_Param	1990	This is the maximum current Aux 1 Output can source before the virtual fusing turns the output off.	20	A	0	20	0.1
TEM_Aux2_Output_Fuse_Param	1991	This is the maximum current Aux 2 Output can source before the virtual fusing turns the output off.	20	A	0	20	0.1
TEM_Aux3_Output_Fuse_Param	1992	This is the maximum current Aux 3 Output can source before the virtual fusing turns the output off.	20	A	0	20	0.1
TEM_Aux1_Loadshed_Level	3273	Loadshed level parameter for TEM Aux Switch 1	1	No Units	0	3	1
TEM_Aux2_Loadshed_Level	3274	Loadshed level parameter for TEM Aux Switch 2	1	No Units	0	3	1
TEM_Aux3_Loadshed_Level	3275	Loadshed level parameter for TEM Aux Switch 3	1	No Units	0	3	1
597197 - BCM PROG, AUXILIARY LOAD For (4) Rocker Switch							
TEM_Aux1_Output_Fuse_Param	1990	This is the maximum current Aux 1 Output can source before the virtual fusing turns the output off.	20	A	0	20	0.1
TEM_Aux2_Output_Fuse_Param	1991	This is the maximum current Aux 2 Output can source before the virtual fusing turns the output off.	20	A	0	20	0.1
TEM_Aux3_Output_Fuse_Param	1992	This is the maximum current Aux 3 Output can source before the virtual fusing turns the output off.	20	A	0	20	0.1

TEM_Aux4_Output_Fuse_Param	1995	This is the maximum current Aux 4 Output can source before the virtual fusing turns the output off.	20	A	0	20	0.1
TEM_Aux1_Loadshed_Level	3273	Loadshed level parameter for TEM Aux Switch 1	1	No Units	0	3	1
TEM_Aux2_Loadshed_Level	3274	Loadshed level parameter for TEM Aux Switch 2	1	No Units	0	3	1
TEM_Aux3_Loadshed_Level	3275	Loadshed level parameter for TEM Aux Switch 3	1	No Units	0	3	1
TEM_Aux4_Loadshed_Level	3276	Loadshed level parameter for TEM Aux Switch 4	1	No Units	0	3	1
597198 - BCM PROG, AUXILIARY LOAD For (5) Rocker Switch							
TEM_Aux1_Output_Fuse_Param	1990	This is the maximum current Aux 1 Output can source before the virtual fusing turns the output off.	20	A	0	20	0.1
TEM_Aux2_Output_Fuse_Param	1991	This is the maximum current Aux 2 Output can source before the virtual fusing turns the output off.	20	A	0	20	0.1
TEM_Aux3_Output_Fuse_Param	1992	This is the maximum current Aux 3 Output can source before the virtual fusing turns the output off.	20	A	0	20	0.1
TEM_Aux4_Output_Fuse_Param	1995	This is the maximum current Aux 4 Output can source before the virtual fusing turns the output off.	20	A	0	20	0.1
TEM_Aux5_Output_Fuse_Param	1999	This is the maximum current Aux 5 Output can source before the virtual fusing turns the output off.	20	A	0	20	0.1
TEM_Aux1_Loadshed_Level	3273	Loadshed level parameter for TEM Aux Switch 1	1	No Units	0	3	1
TEM_Aux2_Loadshed_Level	3274	Loadshed level parameter for TEM Aux Switch 2	1	No Units	0	3	1
TEM_Aux3_Loadshed_Level	3275	Loadshed level parameter for TEM Aux Switch 3	1	No Units	0	3	1
TEM_Aux4_Loadshed_Level	3276	Loadshed level parameter for TEM Aux Switch 4	1	No Units	0	3	1
TEM_Aux5_Loadshed_Level	3277	Loadshed level parameter for TEM Aux Switch 5	1	No Units	0	3	1
597199 - BCM PROG, AUXILIARY LOAD For (6) Rocker Switch							
TEM_Aux1_Output_Fuse_Param	1990	This is the maximum current Aux 1 Output can source before the virtual fusing turns the output off.	20	A	0	20	0.1
TEM_Aux2_Output_Fuse_Param	1991	This is the maximum current Aux 2 Output can source before the virtual fusing turns the output off.	20	A	0	20	0.1
TEM_Aux3_Output_Fuse_Param	1992	This is the maximum current Aux 3 Output can source before the virtual fusing turns the output off.	20	A	0	20	0.1
TEM_Aux4_Output_Fuse_Param	1995	This is the maximum current Aux 4 Output can source before the virtual fusing turns the output off.	20	A	0	20	0.1
TEM_Aux5_Output_Fuse_Param	1999	This is the maximum current Aux 5 Output can source before the virtual fusing turns the output off.	20	A	0	20	0.1
TEM_Aux6_Output_Fuse_Param	2000	This is the maximum current Aux 6 Output can source before the virtual fusing turns the output off.	20	A	0	20	0.1
TEM_Aux1_Loadshed_Level	3273	Loadshed level parameter for TEM Aux Switch 1	1	No Units	0	3	1

TEM_Aux2_Loadshed_Level	3274	Loadshed level parameter for TEM Aux Switch 2	1	No Units	0	3	1
TEM_Aux3_Loadshed_Level	3275	Loadshed level parameter for TEM Aux Switch 3	1	No Units	0	3	1
TEM_Aux4_Loadshed_Level	3276	Loadshed level parameter for TEM Aux Switch 4	1	No Units	0	3	1
TEM_Aux5_Loadshed_Level	3277	Loadshed level parameter for TEM Aux Switch 5	1	No Units	0	3	1
TEM_Aux6_Loadshed_Level	3278	Loadshed level parameter for TEM Aux Switch 6	1	No Units	0	3	1

Parameter Definitions:

- **TEM_Aux1_Output_Fuse_Param** – This parameter sets the limit (in AMPS) of the current flowing from the output labeled Aux_Switch_1_Output of RPM #1. Default is set at 20 amps.
- **TEM_Aux2_Output_Fuse_Param** – This parameter sets the limit (in AMPS) of the current flowing from the output labeled Aux_Switch_2_Output of RPM #1. Default is set at 20 amps.
- **TEM_Aux3_Output_Fuse_Param** – This parameter sets the limit (in AMPS) of the current flowing from the output labeled Aux_Switch_3_Output of RPM #1. Default is set at 20 amps.
- **TEM_Aux4_Output_Fuse_Param** – This parameter sets the limit (in AMPS) of the current flowing from the output labeled Aux_Switch_4_Output of RPM #1. Default is set at 20 amps.
- **TEM_Aux5_Output_Fuse_Param** – This parameter sets the limit (in AMPS) of the current flowing from the output labeled Aux_Switch_5_Output of RPM #1. Default is set at 20 amps.
- **TEM_Aux6_Output_Fuse_Param** – This parameter sets the limit (in AMPS) of the current flowing from the output labeled Aux_Switch_6_Output of RPM #1. Default is set at 20 amps.
- **TEM_Aux1_LoadShed_Level** – This is the level at which the Aux1 Output will load shed. A value of ZERO (0) disables load shed. A value of ONE (1) is least priority (sheds first), a value of 3 highest priority (sheds last).
- **TEM_Aux2_LoadShed_Level** – This is the level at which the Aux2 Output will load shed. A value of ZERO (0) disables load shed. A value of ONE (1) is least priority (sheds first), a value of 3 highest priority (sheds last).
- **TEM_Aux3_LoadShed_Level** – This is the level at which the Aux3 Output will load shed. A value of ZERO (0) disables load shed. A value of ONE (1) is least priority (sheds first), a value of 3 highest priority (sheds last).
- **TEM_Aux4_LoadShed_Level** – This is the level at which the Aux4 Output will load shed. A value of ZERO (0) disables load shed. A value of ONE (1) is least priority (sheds first), a value of 3 highest priority (sheds last).
- **TEM_Aux5_LoadShed_Level** – This is the level at which the Aux5 Output will load shed. A value of ZERO (0) disables load shed. A value of ONE (1) is least priority (sheds first), a value of 3 highest priority (sheds last).

- **TEM_Aux6_LoadShed_Level** – This is the level at which the Aux6 Output will load shed. A value of ZERO (0) disables load shed. A value of ONE (1) is least priority (sheds first), a value of 3 highest priority (sheds last).

Parts Associated with This Feature:
See the list at the beginning of this section.

How to Test This Feature:
1. Turn key to accessory or IGN key-state.
2. Activate first in-cab switch.
3. Verify that RPM output #1 is providing battery voltage.
4. Deactivate first in-cab switch.
5. Apply 12V to RPM input #1.
6. Verify that RPM output #1 is providing battery voltage.
7. Apply GND to RPM input #1.
8. Verify that RPM output #1 shuts off.

Continue the above testing procedure for each RPM switch location.

Note: This feature uses body controller-based software controls which can be diagnosed with The International® Diamond Logic® Builder software (see local dealer if not owned).

References:
Refer to the applicable International® Circuit Diagrams and Service Manuals.

26.15. 60AAB: BDY INTG, RPM (2) Mounted Under Cab; Up to Six Outputs and Six Inputs Each, Max. 20 AMP per Channel, Max. 80 AMP Total per Power Module (Includes Switch Packs with Latched Switches) Mounted on Battery Box, BOC.

Feature Applicability to Vehicle Platforms:

- Heavy Vocational (HV)
- Medium Vocational (MV)
- Heavy Extreme (HX) 2021 and Newer

Extended Description: Feature 60AAB includes two Remote Power Modules (RPMs) mounted behind the battery box on MV or on a bracket under cab on HV at Back of Cab (BOC). Included with this feature are twelve 2-position latched switches located in the Instrument Panel. Each RPM output can provide up to 20-Amps maximum with a total of 80-Amps maximum per module.

System Block Diagram:

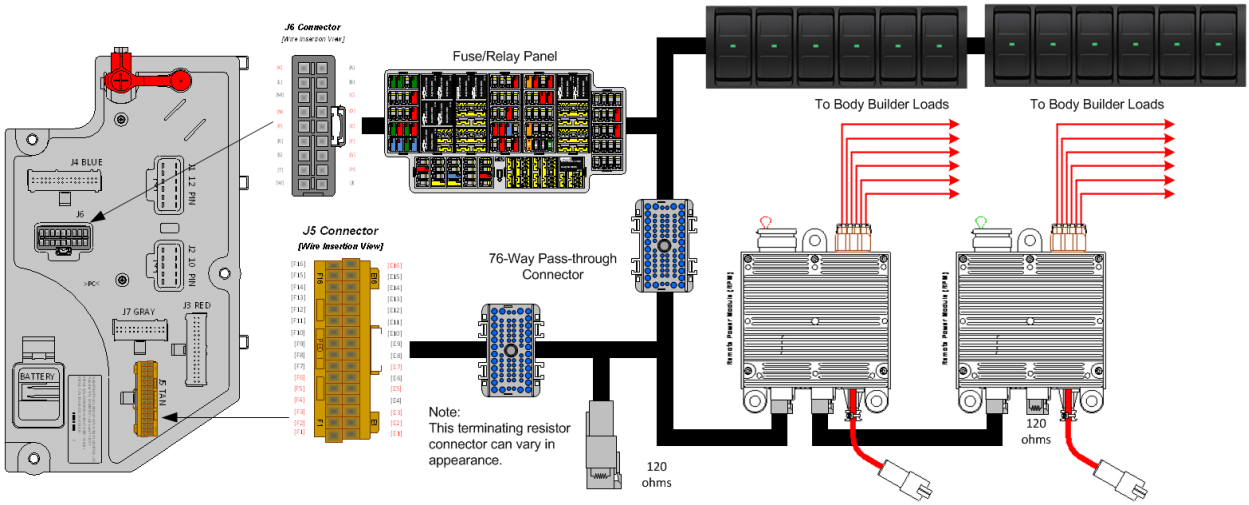

Body Controller Software Feature Codes:

Note: Feature code 60AAB is configured by special unadvertised software feature codes. These codes are determined by the number of additional features that use the RPM resources. The following codes should be added after all other features are added to the vehicle.
60ACA = 597194 – This feature should be added if there are features already using five RPM inputs/outputs. (BCM PROG, AUXILIARY LOAD #1)
60ACB = 597195 – This feature should be added if there are features already using four RPM inputs/outputs. (BCM PROG, AUXILIARY LOAD 2 ROCKER SW)
60ACC = 597196 – This feature should be added if there are features already using three RPM inputs/outputs. (BCM PROG, AUXILIARY LOAD 3 ROCKER SW)

60ACD = 597197 – This feature should be added if there are features already using two RPM inputs/outputs. (BCM PROG, AUXILIARY LOAD 4 ROCKER SW)
60ACJ = 597198 – This feature should be added if there are features already using one RPM input/output. (BCM PROG, AUXILIARY LOAD 5 ROCKER SW)
60ACK = 597199 – This feature should be added if there no other features using any RPM inputs/outputs. (BCM PROG, AUXILIARY LOAD 6 ROCKER SW)
60ACV = 597202 – This feature should be added to add the second RPM (60AAB). (BCM PROG, ADDITIONAL 6 AUXILIARY SW)

Body Controller Software Feature Code Parameters:

Parameter		ID	Description	Default	Units	Min	Max	Step
597194 - BCM PROG, AUXILIARY LOAD #1 For Rocker Switch								
TEM_Aux1_Output_Fuse_Param		1990	This is the maximum current Aux 1 Output can source before the virtual fusing turns the output off.	20	A	0	20	0.1
TEM_Aux1_Loadshed_Level		3273	Loadshed level parameter for TEM Aux Switch 1	1	No Units	0	3	1
597195 - BCM PROG, AUXILIARY LOAD For (2) Rocker Switch								
TEM_Aux1_Output_Fuse_Param		1990	This is the maximum current Aux 1 Output can source before the virtual fusing turns the output off.	20	A	0	20	0.1
TEM_Aux2_Output_Fuse_Param		1991	This is the maximum current Aux 2 Output can source before the virtual fusing turns the output off.	20	A	0	20	0.1
TEM_Aux1_Loadshed_Level		3273	Loadshed level parameter for TEM Aux Switch 1	1	No Units	0	3	1
TEM_Aux2_Loadshed_Level		3274	Loadshed level parameter for TEM Aux Switch 2	1	No Units	0	3	1
597196 - BCM PROG, AUXILIARY LOAD For (3) Rocker Switch								
TEM_Aux1_Output_Fuse_Param		1990	This is the maximum current Aux 1 Output can source before the virtual fusing turns the output off.	20	A	0	20	0.1
TEM_Aux2_Output_Fuse_Param		1991	This is the maximum current Aux 2 Output can source before the virtual fusing turns the output off.	20	A	0	20	0.1
TEM_Aux3_Output_Fuse_Param		1992	This is the maximum current Aux 3 Output can source before the virtual fusing turns the output off.	20	A	0	20	0.1
TEM_Aux1_Loadshed_Level		3273	Loadshed level parameter for TEM Aux Switch 1	1	No Units	0	3	1
TEM_Aux2_Loadshed_Level		3274	Loadshed level parameter for TEM Aux Switch 2	1	No Units	0	3	1
TEM_Aux3_Loadshed_Level		3275	Loadshed level parameter for TEM Aux Switch 3	1	No Units	0	3	1
597197 - BCM PROG, AUXILIARY LOAD For (4) Rocker Switch								
TEM_Aux1_Output_Fuse_Param		1990	This is the maximum current Aux 1 Output can source before the virtual fusing turns the output off.	20	A	0	20	0.1
TEM_Aux2_Output_Fuse_Param		1991	This is the maximum current Aux 2 Output can source before the virtual fusing turns the output off.	20	A	0	20	0.1
TEM_Aux3_Output_Fuse_Param		1992	This is the maximum current Aux 3 Output can source before the virtual fusing turns the output off.	20	A	0	20	0.1

TEM_Aux4_Output_Fuse_Param		1995	This is the maximum current Aux 4 Output can source before the virtual fusing turns the output off.	20	A	0	20	0.1
TEM_Aux1_Loadshed_Level		3273	Loadshed level parameter for TEM Aux Switch 1	1	No Units	0	3	1
TEM_Aux2_Loadshed_Level		3274	Loadshed level parameter for TEM Aux Switch 2	1	No Units	0	3	1
TEM_Aux3_Loadshed_Level		3275	Loadshed level parameter for TEM Aux Switch 3	1	No Units	0	3	1
TEM_Aux4_Loadshed_Level		3276	Loadshed level parameter for TEM Aux Switch 4	1	No Units	0	3	1
	597198 - BCM PROG, AUXILIARY LOAD For (5) Rocker Switch							
TEM_Aux1_Output_Fuse_Param		1990	This is the maximum current Aux 1 Output can source before the virtual fusing turns the output off.	20	A	0	20	0.1
TEM_Aux2_Output_Fuse_Param		1991	This is the maximum current Aux 2 Output can source before the virtual fusing turns the output off.	20	A	0	20	0.1
TEM_Aux3_Output_Fuse_Param		1992	This is the maximum current Aux 3 Output can source before the virtual fusing turns the output off.	20	A	0	20	0.1
TEM_Aux4_Output_Fuse_Param		1995	This is the maximum current Aux 4 Output can source before the virtual fusing turns the output off.	20	A	0	20	0.1
TEM_Aux5_Output_Fuse_Param		1999	This is the maximum current Aux 5 Output can source before the virtual fusing turns the output off.	20	A	0	20	0.1
TEM_Aux1_Loadshed_Level		3273	Loadshed level parameter for TEM Aux Switch 1	1	No Units	0	3	1
TEM_Aux2_Loadshed_Level		3274	Loadshed level parameter for TEM Aux Switch 2	1	No Units	0	3	1
TEM_Aux3_Loadshed_Level		3275	Loadshed level parameter for TEM Aux Switch 3	1	No Units	0	3	1
TEM_Aux4_Loadshed_Level		3276	Loadshed level parameter for TEM Aux Switch 4	1	No Units	0	3	1
TEM_Aux5_Loadshed_Level		3277	Loadshed level parameter for TEM Aux Switch 5	1	No Units	0	3	1
	597199 - BCM PROG, AUXILIARY LOAD For (6) Rocker Switch							
TEM_Aux1_Output_Fuse_Param		1990	This is the maximum current Aux 1 Output can source before the virtual fusing turns the output off.	20	A	0	20	0.1
TEM_Aux2_Output_Fuse_Param		1991	This is the maximum current Aux 2 Output can source before the virtual fusing turns the output off.	20	A	0	20	0.1
TEM_Aux3_Output_Fuse_Param		1992	This is the maximum current Aux 3 Output can source before the virtual fusing turns the output off.	20	A	0	20	0.1
TEM_Aux4_Output_Fuse_Param		1995	This is the maximum current Aux 4 Output can source before the virtual fusing turns the output off.	20	A	0	20	0.1
TEM_Aux5_Output_Fuse_Param		1999	This is the maximum current Aux 5 Output can source before the virtual fusing turns the output off.	20	A	0	20	0.1
TEM_Aux6_Output_Fuse_Param		2000	This is the maximum current Aux 6 Output can source before the virtual fusing turns the output off.	20	A	0	20	0.1
TEM_Aux1_Loadshed_Level		3273	Loadshed level parameter for TEM Aux Switch 1	1	No Units	0	3	1

TEM_Aux2_Loadshed_Level		3274	Loadshed level parameter for TEM Aux Switch 2	1	No Units	0	3	1
TEM_Aux3_Loadshed_Level		3275	Loadshed level parameter for TEM Aux Switch 3	1	No Units	0	3	1
TEM_Aux4_Loadshed_Level		3276	Loadshed level parameter for TEM Aux Switch 4	1	No Units	0	3	1
TEM_Aux5_Loadshed_Level		3277	Loadshed level parameter for TEM Aux Switch 5	1	No Units	0	3	1
TEM_Aux6_Loadshed_Level		3278	Loadshed level parameter for TEM Aux Switch 6	1	No Units	0	3	1
597202 – BCM PROG, ADDITIONAL 6 AUXILIARY SW								
TEM_Aux7_Output_Fuse_Param		2100	This is the maximum current Aux 7 Output can source before the virtual fusing turns the output off.	20	A	0	20	0.1
TEM_Aux8_Output_Fuse_Param		2101	This is the maximum current Aux 8 Output can source before the virtual fusing turns the output off.	20	A	0	20	0.1
TEM_Aux9_Output_Fuse_Param		2102	This is the maximum current Aux 9 Output can source before the virtual fusing turns the output off.	20	A	0	20	0.1
TEM_Aux10_Output_Fuse_Param		2103	This is the maximum current Aux 10 Output can source before the virtual fusing turns the output off.	20	A	0	20	0.1
TEM_Aux11_Output_Fuse_Param		2104	This is the maximum current Aux 11 Output can source before the virtual fusing turns the output off.	20	A	0	20	0.1
TEM_Aux12_Output_Fuse_Param		2105	This is the maximum current Aux 12 Output can source before the virtual fusing turns the output off.	20	A	0	20	0.1
TEM_Aux7_Loadshed_Level		3339	Loadshed level parameter for TEM Aux Switch 7	1	No Units	0	3	1
TEM_Aux8_Loadshed_Level		3340	Loadshed level parameter for TEM Aux Switch 8	1	No Units	0	3	1
TEM_Aux9_Loadshed_Level		3341	Loadshed level parameter for TEM Aux Switch 9	1	No Units	0	3	1
TEM_Aux10_Loadshed_Level		3342	Loadshed level parameter for TEM Aux Switch 10	1	No Units	0	3	1
TEM_Aux11_Loadshed_Level		3343	Loadshed level parameter for TEM Aux Switch 11	1	No Units	0	3	1
TEM_Aux12_Loadshed_Level		3344	Loadshed level parameter for TEM Aux Switch 12	1	No Units	0	3	1

Parameter Definitions:

- **TEM_Aux1_Output_Fuse_Param** – This parameter sets the limit (in AMPS) of the current flowing from the output labeled Aux_Switch_1_Output of RPM #1. Default is set at 20 amps.
- **TEM_Aux2_Output_Fuse_Param** – This parameter sets the limit (in AMPS) of the current flowing from the output labeled Aux_Switch_2_Output of RPM #1. Default is set at 20 amps.
- **TEM_Aux3_Output_Fuse_Param** – This parameter sets the limit (in AMPS) of the current flowing from the output labeled Aux_Switch_3_Output of RPM #1. Default is set at 20 amps.

- **TEM_Aux4_Output_Fuse_Param** – This parameter sets the limit (in AMPS) of the current flowing from the output labeled Aux_Switch_4_Output of RPM #1. Default is set at 20 amps.
- **TEM_Aux5_Output_Fuse_Param** – This parameter sets the limit (in AMPS) of the current flowing from the output labeled Aux_Switch_5_Output of RPM #1. Default is set at 20 amps.
- **TEM_Aux6_Output_Fuse_Param** – This parameter sets the limit (in AMPS) of the current flowing from the output labeled Aux_Switch_6_Output of RPM #1. Default is set at 20 amps.
- **TEM_Aux7_Output_Fuse_Param** – This parameter sets the limit (in AMPS) of the current flowing from the output labeled Aux_Switch_7_Output of RPM #2. Default is set at 20 amps.
- **TEM_Aux8_Output_Fuse_Param** – This parameter sets the limit (in AMPS) of the current flowing from the output labeled Aux_Switch_8_Output of RPM #2. Default is set at 20 amps.
- **TEM_Aux9_Output_Fuse_Param** – This parameter sets the limit (in AMPS) of the current flowing from the output labeled Aux_Switch_9_Output of RPM #2. Default is set at 20 amps.
- **TEM_Aux10_Output_Fuse_Param** – This parameter sets the limit (in AMPS) of the current flowing from the output labeled Aux_Switch_10_Output of RPM #2. Default is set at 20 amps.
- **TEM_Aux11_Output_Fuse_Param** – This parameter sets the limit (in AMPS) of the current flowing from the output labeled Aux_Switch_11_Output of RPM #2. Default is set at 20 amps.
- **TEM_Aux12_Output_Fuse_Param** – This parameter sets the limit (in AMPS) of the current flowing from the output labeled Aux_Switch_12_Output of RPM #2. Default is set at 20 amps.
- **TEM_Aux1_LoadShed_Level** – This is the level at which the Aux1 Output will load shed. A value of ZERO (0) disables load shed. A value of ONE (1) is least priority (sheds first), a value of 3 highest priority (sheds last).
- **TEM_Aux2_LoadShed_Level** – This is the level at which the Aux2 Output will load shed. A value of ZERO (0) disables load shed. A value of ONE (1) is least priority (sheds first), a value of 3 highest priority (sheds last).
- **TEM_Aux3_LoadShed_Level** – This is the level at which the Aux3 Output will load shed. A value of ZERO (0) disables load shed. A value of ONE (1) is least priority (sheds first), a value of 3 highest priority (sheds last).
- **TEM_Aux4_LoadShed_Level** – This is the level at which the Aux4 Output will load shed. A value of ZERO (0) disables load shed. A value of ONE (1) is least priority (sheds first), a value of 3 highest priority (sheds last).
- **TEM_Aux5_LoadShed_Level** – This is the level at which the Aux5 Output will load shed. A value of ZERO (0) disables load shed. A value of ONE (1) is least priority (sheds first), a value of 3 highest priority (sheds last).

- **TEM_Aux6_LoadShed_Level** – This is the level at which the Aux6 Output will load shed. A value of ZERO (0) disables load shed. A value of ONE (1) is least priority (sheds first), a value of 3 highest priority (sheds last).
- **TEM_Aux7_LoadShed_Level** – This is the level at which the Aux7 Output will load shed. A value of ZERO (0) disables load shed. A value of ONE (1) is least priority (sheds first), a value of 3 highest priority (sheds last).
- **TEM_Aux8_LoadShed_Level** – This is the level at which the Aux8 Output will load shed. A value of ZERO (0) disables load shed. A value of ONE (1) is least priority (sheds first), a value of 3 highest priority (sheds last).
- **TEM_Aux9_LoadShed_Level** – This is the level at which the Aux9 Output will load shed. A value of ZERO (0) disables load shed. A value of ONE (1) is least priority (sheds first), a value of 3 highest priority (sheds last).
- **TEM_Aux10_LoadShed_Level** – This is the level at which the Aux10 Output will load shed. A value of ZERO (0) disables load shed. A value of ONE (1) is least priority (sheds first), a value of 3 highest priority (sheds last).
- **TEM_Aux11_LoadShed_Level** – This is the level at which the Aux11 Output will load shed. A value of ZERO (0) disables load shed. A value of ONE (1) is least priority (sheds first), a value of 3 highest priority (sheds last).
- **TEM_Aux12_LoadShed_Level** – This is the level at which the Aux12 Output will load shed. A value of ZERO (0) disables load shed. A value of ONE (1) is least priority (sheds first), a value of 3 highest priority (sheds last).

Parts Associated with This Feature:
See the list at the beginning of this section.

How to Test This Feature:
1. Turn key to accessory or IGN key-state.
2. Activate first in-cab switch.
3. Verify that RPM output #1 is providing battery voltage.
4. Deactivate first in-cab switch.
5. Apply 12V to RPM input #1.
6. Verify that RPM output #1 is providing battery voltage.
7. Apply GND to RPM input #1.
8. Verify that RPM output #1 shuts off.

Continue the above testing procedure for each RPM switch location.

Note: This feature uses body controller-based software controls which can be diagnosed with The International® Diamond Logic® Builder software (see local dealer if not owned).

References:
Refer to the applicable International® Circuit Diagrams and Service Manuals.

26.16. 60AAD: BDY INTG, RPM (2) {SPECIAL} Mounted Under Cab or on Battery Box; Max. 20-AMP per Channel, Max. 80-AMP Total per Power Module; Includes One Module with Switch Pack Containing Six Latched Switches and One Module with Hardware Only.

Feature Applicability to Vehicle Platforms:

- Heavy Vocational (HV)
- Medium Vocational (MV)
- Heavy Extreme (HX) 2021 and Newer

Extended Description: Feature 60AAD includes two Remote Power Modules (RPMs) mounted behind the battery box on MV or on a bracket under cab on HV at Back of Cab (BOC). Included with this feature are six 2-position latched switches located in the Instrument Panel with software to control the outputs on RPM 1. RPM 2 includes the RPM only and associated wiring for use with custom logic. Each RPM output can provide up to 20-Amps maximum with a total of 80-Amps maximum per module.

System Block Diagram:

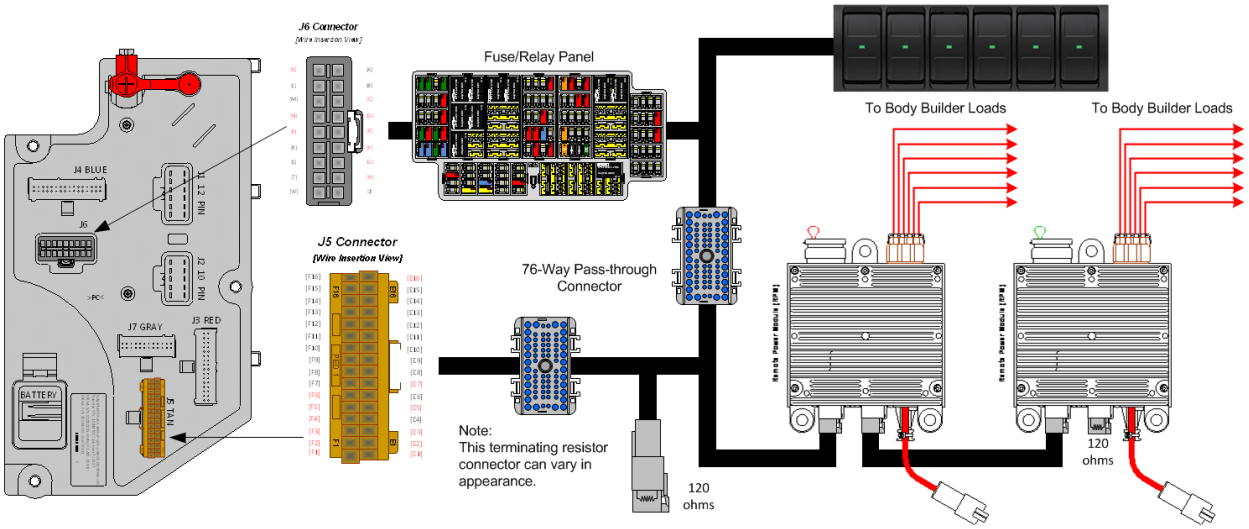

Body Controller Software Feature Codes:

Note: Feature code 60AAD is configured by special unadvertised software feature codes. These codes are determined by the number of additional features that use the RPM resources. The following codes should be added after all other features are added to the vehicle.

60ACA = 597194 – This feature should be added if there are features already using five RPM inputs/outputs. (BCM PROG, AUXILIARY LOAD #1)

60ACB = 597195 – This feature should be added if there are features already using four RPM inputs/outputs. (BCM PROG, AUXILIARY LOAD 2 ROCKER SW)

60ACC = 597196 – This feature should be added if there are features already using three RPM inputs/outputs. (BCM PROG, AUXILIARY LOAD 3 ROCKER SW)

60ACD = 597197 – This feature should be added if there are features already using two RPM inputs/outputs. (BCM PROG, AUXILIARY LOAD 4 ROCKER SW)
60ACJ = 597198 – This feature should be added if there are features already using one RPM input/output. (BCM PROG, AUXILIARY LOAD 5 ROCKER SW)
60ACK = 597199 – This feature should be added if there no other features using any RPM inputs/outputs. (BCM PROG, AUXILIARY LOAD 6 ROCKER SW)

Body Controller Software Feature Code Parameters:

Parameter	ID	Description	Default	Units	Min	Max	Step
597194 - BCM PROG, AUXILIARY LOAD #1 For Rocker Switch							
TEM_Aux1_Output_Fuse_Param	1990	This is the maximum current Aux 1 Output can source before the virtual fusing turns the output off.	20	A	0	20	0.1
TEM_Aux1_Loadshed_Level	3273	Loadshed level parameter for TEM Aux Switch 1	1	No Units	0	3	1
597195 - BCM PROG, AUXILIARY LOAD For (2) Rocker Switch							
TEM_Aux1_Output_Fuse_Param	1990	This is the maximum current Aux 1 Output can source before the virtual fusing turns the output off.	20	A	0	20	0.1
TEM_Aux2_Output_Fuse_Param	1991	This is the maximum current Aux 2 Output can source before the virtual fusing turns the output off.	20	A	0	20	0.1
TEM_Aux1_Loadshed_Level	3273	Loadshed level parameter for TEM Aux Switch 1	1	No Units	0	3	1
TEM_Aux2_Loadshed_Level	3274	Loadshed level parameter for TEM Aux Switch 2	1	No Units	0	3	1
597196 - BCM PROG, AUXILIARY LOAD For (3) Rocker Switch							
TEM_Aux1_Output_Fuse_Param	1990	This is the maximum current Aux 1 Output can source before the virtual fusing turns the output off.	20	A	0	20	0.1
TEM_Aux2_Output_Fuse_Param	1991	This is the maximum current Aux 2 Output can source before the virtual fusing turns the output off.	20	A	0	20	0.1
TEM_Aux3_Output_Fuse_Param	1992	This is the maximum current Aux 3 Output can source before the virtual fusing turns the output off.	20	A	0	20	0.1
TEM_Aux1_Loadshed_Level	3273	Loadshed level parameter for TEM Aux Switch 1	1	No Units	0	3	1
TEM_Aux2_Loadshed_Level	3274	Loadshed level parameter for TEM Aux Switch 2	1	No Units	0	3	1
TEM_Aux3_Loadshed_Level	3275	Loadshed level parameter for TEM Aux Switch 3	1	No Units	0	3	1
597197 - BCM PROG, AUXILIARY LOAD For (4) Rocker Switch							
TEM_Aux1_Output_Fuse_Param	1990	This is the maximum current Aux 1 Output can source before the virtual fusing turns the output off.	20	A	0	20	0.1
TEM_Aux2_Output_Fuse_Param	1991	This is the maximum current Aux 2 Output can source before the virtual fusing turns the output off.	20	A	0	20	0.1
TEM_Aux3_Output_Fuse_Param	1992	This is the maximum current Aux 3 Output can source before the virtual fusing turns the output off.	20	A	0	20	0.1
TEM_Aux4_Output_Fuse_Param	1995	This is the maximum current Aux 4 Output can source before the virtual fusing turns the output off.	20	A	0	20	0.1

TEM_Aux1_Loadshed_Level	3273	Loadshed level parameter for TEM Aux Switch 1	1	No Units	0	3	1
TEM_Aux2_Loadshed_Level	3274	Loadshed level parameter for TEM Aux Switch 2	1	No Units	0	3	1
TEM_Aux3_Loadshed_Level	3275	Loadshed level parameter for TEM Aux Switch 3	1	No Units	0	3	1
TEM_Aux4_Loadshed_Level	3276	Loadshed level parameter for TEM Aux Switch 4	1	No Units	0	3	1
597198 - BCM PROG, AUXILIARY LOAD For (5) Rocker Switch							
TEM_Aux1_Output_Fuse_Param	1990	This is the maximum current Aux 1 Output can source before the virtual fusing turns the output off.	20	A	0	20	0.1
TEM_Aux2_Output_Fuse_Param	1991	This is the maximum current Aux 2 Output can source before the virtual fusing turns the output off.	20	A	0	20	0.1
TEM_Aux3_Output_Fuse_Param	1992	This is the maximum current Aux 3 Output can source before the virtual fusing turns the output off.	20	A	0	20	0.1
TEM_Aux4_Output_Fuse_Param	1995	This is the maximum current Aux 4 Output can source before the virtual fusing turns the output off.	20	A	0	20	0.1
TEM_Aux5_Output_Fuse_Param	1999	This is the maximum current Aux 5 Output can source before the virtual fusing turns the output off.	20	A	0	20	0.1
TEM_Aux1_Loadshed_Level	3273	Loadshed level parameter for TEM Aux Switch 1	1	No Units	0	3	1
TEM_Aux2_Loadshed_Level	3274	Loadshed level parameter for TEM Aux Switch 2	1	No Units	0	3	1
TEM_Aux3_Loadshed_Level	3275	Loadshed level parameter for TEM Aux Switch 3	1	No Units	0	3	1
TEM_Aux4_Loadshed_Level	3276	Loadshed level parameter for TEM Aux Switch 4	1	No Units	0	3	1
TEM_Aux5_Loadshed_Level	3277	Loadshed level parameter for TEM Aux Switch 5	1	No Units	0	3	1
597199 - BCM PROG, AUXILIARY LOAD For (6) Rocker Switch							
TEM_Aux1_Output_Fuse_Param	1990	This is the maximum current Aux 1 Output can source before the virtual fusing turns the output off.	20	A	0	20	0.1
TEM_Aux2_Output_Fuse_Param	1991	This is the maximum current Aux 2 Output can source before the virtual fusing turns the output off.	20	A	0	20	0.1
TEM_Aux3_Output_Fuse_Param	1992	This is the maximum current Aux 3 Output can source before the virtual fusing turns the output off.	20	A	0	20	0.1
TEM_Aux4_Output_Fuse_Param	1995	This is the maximum current Aux 4 Output can source before the virtual fusing turns the output off.	20	A	0	20	0.1
TEM_Aux5_Output_Fuse_Param	1999	This is the maximum current Aux 5 Output can source before the virtual fusing turns the output off.	20	A	0	20	0.1
TEM_Aux6_Output_Fuse_Param	2000	This is the maximum current Aux 6 Output can source before the virtual fusing turns the output off.	20	A	0	20	0.1
TEM_Aux1_Loadshed_Level	3273	Loadshed level parameter for TEM Aux Switch 1	1	No Units	0	3	1
TEM_Aux2_Loadshed_Level	3274	Loadshed level parameter for TEM Aux Switch 2	1	No Units	0	3	1

TEM_Aux3_Loadshed_Level	3275	Loadshed level parameter for TEM Aux Switch 3	1	No Units	0	3	1
TEM_Aux4_Loadshed_Level	3276	Loadshed level parameter for TEM Aux Switch 4	1	No Units	0	3	1
TEM_Aux5_Loadshed_Level	3277	Loadshed level parameter for TEM Aux Switch 5	1	No Units	0	3	1
TEM_Aux6_Loadshed_Level	3278	Loadshed level parameter for TEM Aux Switch 6	1	No Units	0	3	1

Parameter Definitions:

- **TEM_Aux1_Output_Fuse_Param** – This parameter sets the limit (in AMPS) of the current flowing from the output labeled Aux_Switch_1_Output of RPM #1. Default is set at 20-amps.
- **TEM_Aux2_Output_Fuse_Param** – This parameter sets the limit (in AMPS) of the current flowing from the output labeled Aux_Switch_2_Output of RPM #1. Default is set at 20-amps.
- **TEM_Aux3_Output_Fuse_Param** – This parameter sets the limit (in AMPS) of the current flowing from the output labeled Aux_Switch_3_Output of RPM #1. Default is set at 20-amps.
- **TEM_Aux4_Output_Fuse_Param** – This parameter sets the limit (in AMPS) of the current flowing from the output labeled Aux_Switch_4_Output of RPM #1. Default is set at 20-amps.
- **TEM_Aux5_Output_Fuse_Param** – This parameter sets the limit (in AMPS) of the current flowing from the output labeled Aux_Switch_5_Output of RPM #1. Default is set at 20-amps.
- **TEM_Aux6_Output_Fuse_Param** – This parameter sets the limit (in AMPS) of the current flowing from the output labeled Aux_Switch_6_Output of RPM #1. Default is set at 20-amps.
- **TEM_Aux1_LoadShed_Level** – This is the level at which the Aux1 Output will load shed. A value of ZERO (0) disables load shed. A value of ONE (1) is least priority (sheds first), a value of 3 highest priority (sheds last).
- **TEM_Aux2_LoadShed_Level** – This is the level at which the Aux2 Output will load shed. A value of ZERO (0) disables load shed. A value of ONE (1) is least priority (sheds first), a value of 3 highest priority (sheds last).
- **TEM_Aux3_LoadShed_Level** – This is the level at which the Aux3 Output will load shed. A value of ZERO (0) disables load shed. A value of ONE (1) is least priority (sheds first), a value of 3 highest priority (sheds last).
- **TEM_Aux4_LoadShed_Level** – This is the level at which the Aux4 Output will load shed. A value of ZERO (0) disables load shed. A value of ONE (1) is least priority (sheds first), a value of 3 highest priority (sheds last).
- **TEM_Aux5_LoadShed_Level** – This is the level at which the Aux5 Output will load shed. A value of ZERO (0) disables load shed. A value of ONE (1) is least priority (sheds first), a value of 3 highest priority (sheds last).

- **TEM_Aux6_LoadShed_Level** – This is the level at which the Aux6 Output will load shed. A value of ZERO (0) disables load shed. A value of ONE (1) is least priority (sheds first), a value of 3 highest priority (sheds last).

Parts Associated with This Feature:
See the list at the beginning of this section.

How to Test This Feature:
1. Turn key to accessory or IGN key-state.
2. Activate first in-cab switch.
3. Verify that RPM output #1 is providing battery voltage.
4. Deactivate first in-cab switch.
5. Apply 12V to RPM input #1.
6. Verify that RPM output #1 is providing battery voltage.
7. Apply GND to RPM input #1.
8. Verify that RPM output #1 shuts off.

Continue the above testing procedure for each RPM switch location.

Note: This feature uses body controller-based software controls which can be diagnosed with The International® Diamond Logic® Builder software (see local dealer if not owned).

References:
Refer to the applicable International® Circuit Diagrams and Service Manuals.

26.17. 60AAG: BDY INTG, RPM Mounted Inside Cab behind Driver Seat; Max. 20-AMP per Channel, Max. 80-AMP Total; Includes One Module with Switch Pack Containing Latched Switches.

Feature Applicability to Vehicle Platforms:

- Heavy Vocational (HV)
- Medium Vocational (MV)

Extended Description: Feature 60AAG includes one Remote Power Module (RPM) mounted in the cab behind the driver seat. Included with this feature are six 2-position latched switches located in the Instrument Panel. Each RPM output can provide up to 20-Amps maximum with a total of 80-Amps maximum per module.

System Block Diagram:

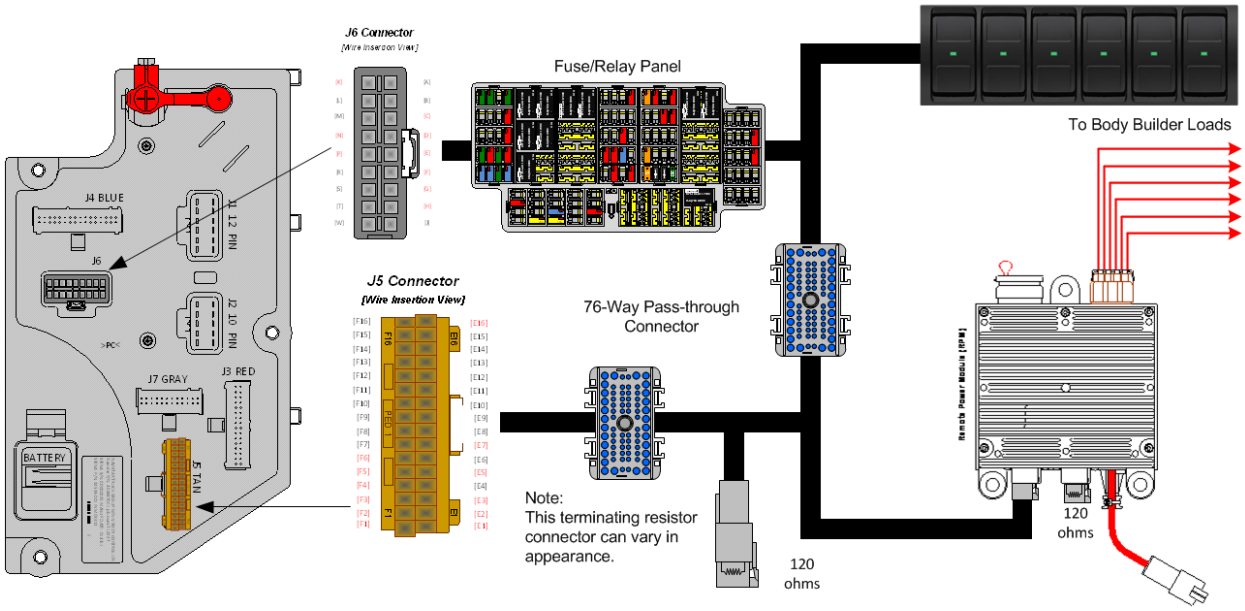

Body Controller Software Feature Codes:

Note: Feature code 60AAG is configured by special unadvertised software feature codes. These codes are determined by the number of additional features that use the RPM resources. The following codes should be added after all other features are added to the vehicle.
60ACA = 597194 – This feature should be added if there are features already using five RPM inputs/outputs. (BCM PROG, AUXILIARY LOAD #1)
60ACB = 597195 – This feature should be added if there are features already using four RPM inputs/outputs. (BCM PROG, AUXILIARY LOAD 2 ROCKER SW)
60ACC = 597196 – This feature should be added if there are features already using three RPM inputs/outputs. (BCM PROG, AUXILIARY LOAD 3 ROCKER SW)

60ACD = 597197 – This feature should be added if there are features already using two RPM inputs/outputs. (BCM PROG, AUXILIARY LOAD 4 ROCKER SW)
60ACJ = 597198 – This feature should be added if there are features already using one RPM input/output. (BCM PROG, AUXILIARY LOAD 5 ROCKER SW)
60ACK = 597199 – This feature should be added if there no other features using any RPM inputs/outputs. (BCM PROG, AUXILIARY LOAD 6 ROCKER SW)

Body Controller Software Feature Code Parameters:

Parameter	ID	Description	Default	Units	Min	Max	Step
597194 - BCM PROG, AUXILIARY LOAD #1 For Rocker Switch							
TEM_Aux1_Output_Fuse_Param	1990	This is the maximum current Aux 1 Output can source before the virtual fusing turns the output off.	20	A	0	20	0.1
TEM_Aux1_Loadshed_Level	3273	Loadshed level parameter for TEM Aux Switch 1	1	No Units	0	3	1
597195 - BCM PROG, AUXILIARY LOAD For (2) Rocker Switch							
TEM_Aux1_Output_Fuse_Param	1990	This is the maximum current Aux 1 Output can source before the virtual fusing turns the output off.	20	A	0	20	0.1
TEM_Aux2_Output_Fuse_Param	1991	This is the maximum current Aux 2 Output can source before the virtual fusing turns the output off.	20	A	0	20	0.1
TEM_Aux1_Loadshed_Level	3273	Loadshed level parameter for TEM Aux Switch 1	1	No Units	0	3	1
TEM_Aux2_Loadshed_Level	3274	Loadshed level parameter for TEM Aux Switch 2	1	No Units	0	3	1
597196 - BCM PROG, AUXILIARY LOAD For (3) Rocker Switch							
TEM_Aux1_Output_Fuse_Param	1990	This is the maximum current Aux 1 Output can source before the virtual fusing turns the output off.	20	A	0	20	0.1
TEM_Aux2_Output_Fuse_Param	1991	This is the maximum current Aux 2 Output can source before the virtual fusing turns the output off.	20	A	0	20	0.1
TEM_Aux3_Output_Fuse_Param	1992	This is the maximum current Aux 3 Output can source before the virtual fusing turns the output off.	20	A	0	20	0.1
TEM_Aux1_Loadshed_Level	3273	Loadshed level parameter for TEM Aux Switch 1	1	No Units	0	3	1
TEM_Aux2_Loadshed_Level	3274	Loadshed level parameter for TEM Aux Switch 2	1	No Units	0	3	1
TEM_Aux3_Loadshed_Level	3275	Loadshed level parameter for TEM Aux Switch 3	1	No Units	0	3	1
597197 - BCM PROG, AUXILIARY LOAD For (4) Rocker Switch							
TEM_Aux1_Output_Fuse_Param	1990	This is the maximum current Aux 1 Output can source before the virtual fusing turns the output off.	20	A	0	20	0.1
TEM_Aux2_Output_Fuse_Param	1991	This is the maximum current Aux 2 Output can source before the virtual fusing turns the output off.	20	A	0	20	0.1
TEM_Aux3_Output_Fuse_Param	1992	This is the maximum current Aux 3 Output can source before the virtual fusing turns the output off.	20	A	0	20	0.1
TEM_Aux4_Output_Fuse_Param	1995	This is the maximum current Aux 4 Output can source before the virtual fusing turns the output off.	20	A	0	20	0.1

TEM_Aux1_Loadshed_Level	3273	Loadshed level parameter for TEM Aux Switch 1	1	No Units	0	3	1
TEM_Aux2_Loadshed_Level	3274	Loadshed level parameter for TEM Aux Switch 2	1	No Units	0	3	1
TEM_Aux3_Loadshed_Level	3275	Loadshed level parameter for TEM Aux Switch 3	1	No Units	0	3	1
TEM_Aux4_Loadshed_Level	3276	Loadshed level parameter for TEM Aux Switch 4	1	No Units	0	3	1
597198 - BCM PROG, AUXILIARY LOAD For (5) Rocker Switch							
TEM_Aux1_Output_Fuse_Param	1990	This is the maximum current Aux 1 Output can source before the virtual fusing turns the output off.	20	A	0	20	0.1
TEM_Aux2_Output_Fuse_Param	1991	This is the maximum current Aux 2 Output can source before the virtual fusing turns the output off.	20	A	0	20	0.1
TEM_Aux3_Output_Fuse_Param	1992	This is the maximum current Aux 3 Output can source before the virtual fusing turns the output off.	20	A	0	20	0.1
TEM_Aux4_Output_Fuse_Param	1995	This is the maximum current Aux 4 Output can source before the virtual fusing turns the output off.	20	A	0	20	0.1
TEM_Aux5_Output_Fuse_Param	1999	This is the maximum current Aux 5 Output can source before the virtual fusing turns the output off.	20	A	0	20	0.1
TEM_Aux1_Loadshed_Level	3273	Loadshed level parameter for TEM Aux Switch 1	1	No Units	0	3	1
TEM_Aux2_Loadshed_Level	3274	Loadshed level parameter for TEM Aux Switch 2	1	No Units	0	3	1
TEM_Aux3_Loadshed_Level	3275	Loadshed level parameter for TEM Aux Switch 3	1	No Units	0	3	1
TEM_Aux4_Loadshed_Level	3276	Loadshed level parameter for TEM Aux Switch 4	1	No Units	0	3	1
TEM_Aux5_Loadshed_Level	3277	Loadshed level parameter for TEM Aux Switch 5	1	No Units	0	3	1
597199 - BCM PROG, AUXILIARY LOAD For (6) Rocker Switch							
TEM_Aux1_Output_Fuse_Param	1990	This is the maximum current Aux 1 Output can source before the virtual fusing turns the output off.	20	A	0	20	0.1
TEM_Aux2_Output_Fuse_Param	1991	This is the maximum current Aux 2 Output can source before the virtual fusing turns the output off.	20	A	0	20	0.1
TEM_Aux3_Output_Fuse_Param	1992	This is the maximum current Aux 3 Output can source before the virtual fusing turns the output off.	20	A	0	20	0.1
TEM_Aux4_Output_Fuse_Param	1995	This is the maximum current Aux 4 Output can source before the virtual fusing turns the output off.	20	A	0	20	0.1
TEM_Aux5_Output_Fuse_Param	1999	This is the maximum current Aux 5 Output can source before the virtual fusing turns the output off.	20	A	0	20	0.1
TEM_Aux6_Output_Fuse_Param	2000	This is the maximum current Aux 6 Output can source before the virtual fusing turns the output off.	20	A	0	20	0.1
TEM_Aux1_Loadshed_Level	3273	Loadshed level parameter for TEM Aux Switch 1	1	No Units	0	3	1
TEM_Aux2_Loadshed_Level	3274	Loadshed level parameter for TEM Aux Switch 2	1	No Units	0	3	1

TEM_Aux3_Loadshed_Level	3275	Loadshed level parameter for TEM Aux Switch 3	1	No Units	0	3	1
TEM_Aux4_Loadshed_Level	3276	Loadshed level parameter for TEM Aux Switch 4	1	No Units	0	3	1
TEM_Aux5_Loadshed_Level	3277	Loadshed level parameter for TEM Aux Switch 5	1	No Units	0	3	1
TEM_Aux6_Loadshed_Level	3278	Loadshed level parameter for TEM Aux Switch 6	1	No Units	0	3	1

Parameter Definitions:

- **TEM_Aux1_Output_Fuse_Param** – This parameter sets the limit (in AMPS) of the current flowing from the output labeled Aux_Switch_1_Output of RPM #1. Default is set at 20-amps.
- **TEM_Aux2_Output_Fuse_Param** – This parameter sets the limit (in AMPS) of the current flowing from the output labeled Aux_Switch_2_Output of RPM #1. Default is set at 20-amps.
- **TEM_Aux3_Output_Fuse_Param** – This parameter sets the limit (in AMPS) of the current flowing from the output labeled Aux_Switch_3_Output of RPM #1. Default is set at 20-amps.
- **TEM_Aux4_Output_Fuse_Param** – This parameter sets the limit (in AMPS) of the current flowing from the output labeled Aux_Switch_4_Output of RPM #1. Default is set at 20-amps.
- **TEM_Aux5_Output_Fuse_Param** – This parameter sets the limit (in AMPS) of the current flowing from the output labeled Aux_Switch_5_Output of RPM #1. Default is set at 20-amps.
- **TEM_Aux6_Output_Fuse_Param** – This parameter sets the limit (in AMPS) of the current flowing from the output labeled Aux_Switch_6_Output of RPM #1. Default is set at 20-amps.
- **TEM_Aux1_LoadShed_Level** – This is the level at which the Aux1 Output will load shed. A value of ZERO (0) disables load shed. A value of ONE (1) is least priority (sheds first), a value of 3 highest priority (sheds last).
- **TEM_Aux2_LoadShed_Level** – This is the level at which the Aux2 Output will load shed. A value of ZERO (0) disables load shed. A value of ONE (1) is least priority (sheds first), a value of 3 highest priority (sheds last).
- **TEM_Aux3_LoadShed_Level** – This is the level at which the Aux3 Output will load shed. A value of ZERO (0) disables load shed. A value of ONE (1) is least priority (sheds first), a value of 3 highest priority (sheds last).
- **TEM_Aux4_LoadShed_Level** – This is the level at which the Aux4 Output will load shed. A value of ZERO (0) disables load shed. A value of ONE (1) is least priority (sheds first), a value of 3 highest priority (sheds last).
- **TEM_Aux5_LoadShed_Level** – This is the level at which the Aux5 Output will load shed. A value of ZERO (0) disables load shed. A value of ONE (1) is least priority (sheds first), a value of 3 highest priority (sheds last).

- **TEM_Aux6_LoadShed_Level** – This is the level at which the Aux6 Output will load shed. A value of ZERO (0) disables load shed. A value of ONE (1) is least priority (sheds first), a value of 3 highest priority (sheds last).

Parts Associated with This Feature:
See the list at the beginning of this section.

How to Test This Feature:
1. Turn key to accessory or IGN key-state.
2. Activate first in-cab switch.
3. Verify that RPM output #1 is providing battery voltage.
4. Deactivate first in-cab switch.
5. Apply 12V to RPM input #1.
6. Verify that RPM output #1 is providing battery voltage.
7. Apply GND to RPM input #1.
8. Verify that RPM output #1 shuts off.

Continue the above testing procedure for each RPM switch location.

Note: This feature uses body controller-based software controls which can be diagnosed with The International® Diamond Logic® Builder software (see local dealer if not owned).

References:
Refer to the applicable International® Circuit Diagrams and Service Manuals.

26.18. 60AAH: BDY INTG, RPM (2) Mounted Inside Cab behind Driver Seat; Max. 20-AMP per Channel, Max. 80-AMP Total; Includes Two Modules with 2-Switch Packs Containing Latched Switches.

Feature Applicability to Vehicle Platforms:

- Heavy Vocational (HV)
- Medium Vocational (MV)
- Heavy Extreme (HX) 2021 and Newer

Extended Description: Feature 60AAH includes two Remote Power Module (RPMs) mounted in the cab behind the driver seat. Included with this feature are twelve 2-position latched switches located in the Instrument Panel. Each RPM output can provide up to 20-Amps maximum with a total of 80-Amps maximum per module.

System Block Diagram:

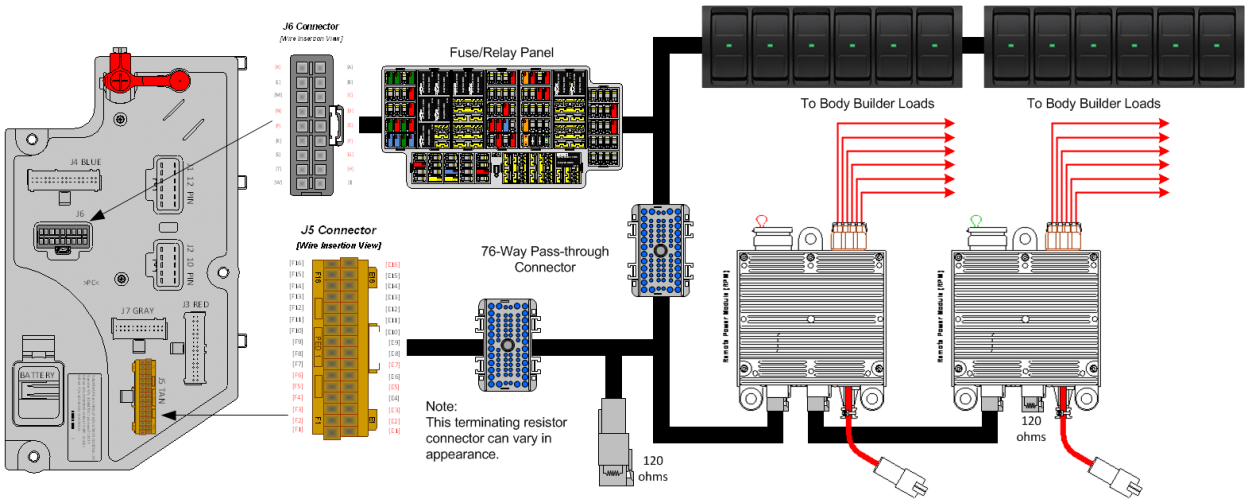

Body Controller Software Feature Codes:

Note: Feature code 60AAH is configured by special unadvertised software feature codes. These codes are determined by the number of additional features that use the RPM resources. The following codes should be added after all other features are added to the vehicle.
60ACA = 597194 – This feature should be added if there are features already using five RPM inputs/outputs. (BCM PROG, AUXILIARY LOAD #1)
60ACB = 597195 – This feature should be added if there are features already using four RPM inputs/outputs. (BCM PROG, AUXILIARY LOAD 2 ROCKER SW)
60ACC = 597196 – This feature should be added if there are features already using three RPM inputs/outputs. (BCM PROG, AUXILIARY LOAD 3 ROCKER SW)
60ACD = 597197 – This feature should be added if there are features already using two RPM inputs/outputs. (BCM PROG, AUXILIARY LOAD 4 ROCKER SW)

60ACJ = 597198 – This feature should be added if there are features already using one RPM input/output. (BCM PROG, AUXILIARY LOAD 5 ROCKER SW)
60ACK = 597199 – This feature should be added if there no other features using any RPM inputs/outputs. (BCM PROG, AUXILIARY LOAD 6 ROCKER SW)
60ACV = 597202 – This feature should be added to add the second RPM (60AAB). (BCM PROG, ADDITIONAL 6 AUXILIARY SW)

Body Controller Software Feature Code Parameters:

Parameter	ID	Description	Default	Units	Min	Max	Step
597194 - BCM PROG, AUXILIARY LOAD #1 For Rocker Switch							
TEM_Aux1_Output_Fuse_Param	1990	This is the maximum current Aux 1 Output can source before the virtual fusing turns the output off.	20	A	0	20	0.1
TEM_Aux1_Loadshed_Level	3273	Loadshed level parameter for TEM Aux Switch 1	1	No Units	0	3	1
597195 - BCM PROG, AUXILIARY LOAD For (2) Rocker Switch							
TEM_Aux1_Output_Fuse_Param	1990	This is the maximum current Aux 1 Output can source before the virtual fusing turns the output off.	20	A	0	20	0.1
TEM_Aux2_Output_Fuse_Param	1991	This is the maximum current Aux 2 Output can source before the virtual fusing turns the output off.	20	A	0	20	0.1
TEM_Aux1_Loadshed_Level	3273	Loadshed level parameter for TEM Aux Switch 1	1	No Units	0	3	1
TEM_Aux2_Loadshed_Level	3274	Loadshed level parameter for TEM Aux Switch 2	1	No Units	0	3	1
597196 - BCM PROG, AUXILIARY LOAD For (3) Rocker Switch							
TEM_Aux1_Output_Fuse_Param	1990	This is the maximum current Aux 1 Output can source before the virtual fusing turns the output off.	20	A	0	20	0.1
TEM_Aux2_Output_Fuse_Param	1991	This is the maximum current Aux 2 Output can source before the virtual fusing turns the output off.	20	A	0	20	0.1
TEM_Aux3_Output_Fuse_Param	1992	This is the maximum current Aux 3 Output can source before the virtual fusing turns the output off.	20	A	0	20	0.1
TEM_Aux1_Loadshed_Level	3273	Loadshed level parameter for TEM Aux Switch 1	1	No Units	0	3	1
TEM_Aux2_Loadshed_Level	3274	Loadshed level parameter for TEM Aux Switch 2	1	No Units	0	3	1
TEM_Aux3_Loadshed_Level	3275	Loadshed level parameter for TEM Aux Switch 3	1	No Units	0	3	1
597197 - BCM PROG, AUXILIARY LOAD For (4) Rocker Switch							
TEM_Aux1_Output_Fuse_Param	1990	This is the maximum current Aux 1 Output can source before the virtual fusing turns the output off.	20	A	0	20	0.1
TEM_Aux2_Output_Fuse_Param	1991	This is the maximum current Aux 2 Output can source before the virtual fusing turns the output off.	20	A	0	20	0.1
TEM_Aux3_Output_Fuse_Param	1992	This is the maximum current Aux 3 Output can source before the virtual fusing turns the output off.	20	A	0	20	0.1
TEM_Aux4_Output_Fuse_Param	1995	This is the maximum current Aux 4 Output can source before the virtual fusing turns the output off.	20	A	0	20	0.1

TEM_Aux1_Loadshed_Level	3273	Loadshed level parameter for TEM Aux Switch 1	1	No Units	0	3	1
TEM_Aux2_Loadshed_Level	3274	Loadshed level parameter for TEM Aux Switch 2	1	No Units	0	3	1
TEM_Aux3_Loadshed_Level	3275	Loadshed level parameter for TEM Aux Switch 3	1	No Units	0	3	1
TEM_Aux4_Loadshed_Level	3276	Loadshed level parameter for TEM Aux Switch 4	1	No Units	0	3	1
597198 - BCM PROG, AUXILIARY LOAD For (5) Rocker Switch							
TEM_Aux1_Output_Fuse_Param	1990	This is the maximum current Aux 1 Output can source before the virtual fusing turns the output off.	20	A	0	20	0.1
TEM_Aux2_Output_Fuse_Param	1991	This is the maximum current Aux 2 Output can source before the virtual fusing turns the output off.	20	A	0	20	0.1
TEM_Aux3_Output_Fuse_Param	1992	This is the maximum current Aux 3 Output can source before the virtual fusing turns the output off.	20	A	0	20	0.1
TEM_Aux4_Output_Fuse_Param	1995	This is the maximum current Aux 4 Output can source before the virtual fusing turns the output off.	20	A	0	20	0.1
TEM_Aux5_Output_Fuse_Param	1999	This is the maximum current Aux 5 Output can source before the virtual fusing turns the output off.	20	A	0	20	0.1
TEM_Aux1_Loadshed_Level	3273	Loadshed level parameter for TEM Aux Switch 1	1	No Units	0	3	1
TEM_Aux2_Loadshed_Level	3274	Loadshed level parameter for TEM Aux Switch 2	1	No Units	0	3	1
TEM_Aux3_Loadshed_Level	3275	Loadshed level parameter for TEM Aux Switch 3	1	No Units	0	3	1
TEM_Aux4_Loadshed_Level	3276	Loadshed level parameter for TEM Aux Switch 4	1	No Units	0	3	1
TEM_Aux5_Loadshed_Level	3277	Loadshed level parameter for TEM Aux Switch 5	1	No Units	0	3	1
597199 - BCM PROG, AUXILIARY LOAD For (6) Rocker Switch							
TEM_Aux1_Output_Fuse_Param	1990	This is the maximum current Aux 1 Output can source before the virtual fusing turns the output off.	20	A	0	20	0.1
TEM_Aux2_Output_Fuse_Param	1991	This is the maximum current Aux 2 Output can source before the virtual fusing turns the output off.	20	A	0	20	0.1
TEM_Aux3_Output_Fuse_Param	1992	This is the maximum current Aux 3 Output can source before the virtual fusing turns the output off.	20	A	0	20	0.1
TEM_Aux4_Output_Fuse_Param	1995	This is the maximum current Aux 4 Output can source before the virtual fusing turns the output off.	20	A	0	20	0.1
TEM_Aux5_Output_Fuse_Param	1999	This is the maximum current Aux 5 Output can source before the virtual fusing turns the output off.	20	A	0	20	0.1
TEM_Aux6_Output_Fuse_Param	2000	This is the maximum current Aux 6 Output can source before the virtual fusing turns the output off.	20	A	0	20	0.1
TEM_Aux1_Loadshed_Level	3273	Loadshed level parameter for TEM Aux Switch 1	1	No Units	0	3	1
TEM_Aux2_Loadshed_Level	3274	Loadshed level parameter for TEM Aux Switch 2	1	No Units	0	3	1

TEM_Aux3_Loadshed_Level	3275	Loadshed level parameter for TEM Aux Switch 3	1	No Units	0	3	1
TEM_Aux4_Loadshed_Level	3276	Loadshed level parameter for TEM Aux Switch 4	1	No Units	0	3	1
TEM_Aux5_Loadshed_Level	3277	Loadshed level parameter for TEM Aux Switch 5	1	No Units	0	3	1
TEM_Aux6_Loadshed_Level	3278	Loadshed level parameter for TEM Aux Switch 6	1	No Units	0	3	1
597202 – BCM PROG, ADDITIONAL 6 AUXILIARY SW							
TEM_Aux7_Output_Fuse_Param	2100	This is the maximum current Aux 7 Output can source before the virtual fusing turns the output off.	20	A	0	20	0.1
TEM_Aux8_Output_Fuse_Param	2101	This is the maximum current Aux 8 Output can source before the virtual fusing turns the output off.	20	A	0	20	0.1
TEM_Aux9_Output_Fuse_Param	2102	This is the maximum current Aux 9 Output can source before the virtual fusing turns the output off.	20	A	0	20	0.1
TEM_Aux10_Output_Fuse_Param	2103	This is the maximum current Aux 10 Output can source before the virtual fusing turns the output off.	20	A	0	20	0.1
TEM_Aux11_Output_Fuse_Param	2104	This is the maximum current Aux 11 Output can source before the virtual fusing turns the output off.	20	A	0	20	0.1
TEM_Aux12_Output_Fuse_Param	2105	This is the maximum current Aux 12 Output can source before the virtual fusing turns the output off.	20	A	0	20	0.1
TEM_Aux7_Loadshed_Level	3339	Loadshed level parameter for TEM Aux Switch 7	1	No Units	0	3	1
TEM_Aux8_Loadshed_Level	3340	Loadshed level parameter for TEM Aux Switch 8	1	No Units	0	3	1
TEM_Aux9_Loadshed_Level	3341	Loadshed level parameter for TEM Aux Switch 9	1	No Units	0	3	1
TEM_Aux10_Loadshed_Level	3342	Loadshed level parameter for TEM Aux Switch 10	1	No Units	0	3	1
TEM_Aux11_Loadshed_Level	3343	Loadshed level parameter for TEM Aux Switch 11	1	No Units	0	3	1
TEM_Aux12_Loadshed_Level	3344	Loadshed level parameter for TEM Aux Switch 12	1	No Units	0	3	1

Parameter Definitions:

- **TEM_Aux1_Output_Fuse_Param** – This parameter sets the limit (in AMPS) of the current flowing from the output labeled Aux_Switch_1_Output of RPM #1. Default is set at 20 amps.
- **TEM_Aux2_Output_Fuse_Param** – This parameter sets the limit (in AMPS) of the current flowing from the output labeled Aux_Switch_2_Output of RPM #1. Default is set at 20 amps.
- **TEM_Aux3_Output_Fuse_Param** – This parameter sets the limit (in AMPS) of the current flowing from the output labeled Aux_Switch_3_Output of RPM #1. Default is set at 20 amps.

- **TEM_Aux4_Output_Fuse_Param** – This parameter sets the limit (in AMPS) of the current flowing from the output labeled Aux_Switch_4_Output of RPM #1. Default is set at 20 amps.
- **TEM_Aux5_Output_Fuse_Param** – This parameter sets the limit (in AMPS) of the current flowing from the output labeled Aux_Switch_5_Output of RPM #1. Default is set at 20 amps.
- **TEM_Aux6_Output_Fuse_Param** – This parameter sets the limit (in AMPS) of the current flowing from the output labeled Aux_Switch_6_Output of RPM #1. Default is set at 20 amps.
- **TEM_Aux7_Output_Fuse_Param** – This parameter sets the limit (in AMPS) of the current flowing from the output labeled Aux_Switch_7_Output of RPM #2. Default is set at 20 amps.
- **TEM_Aux8_Output_Fuse_Param** – This parameter sets the limit (in AMPS) of the current flowing from the output labeled Aux_Switch_8_Output of RPM #2. Default is set at 20 amps.
- **TEM_Aux9_Output_Fuse_Param** – This parameter sets the limit (in AMPS) of the current flowing from the output labeled Aux_Switch_9_Output of RPM #2. Default is set at 20 amps.
- **TEM_Aux10_Output_Fuse_Param** – This parameter sets the limit (in AMPS) of the current flowing from the output labeled Aux_Switch_10_Output of RPM #2. Default is set at 20 amps.
- **TEM_Aux11_Output_Fuse_Param** – This parameter sets the limit (in AMPS) of the current flowing from the output labeled Aux_Switch_11_Output of RPM #2. Default is set at 20 amps.
- **TEM_Aux12_Output_Fuse_Param** – This parameter sets the limit (in AMPS) of the current flowing from the output labeled Aux_Switch_12_Output of RPM #2. Default is set at 20 amps.
- **TEM_Aux1_LoadShed_Level** – This is the level at which the Aux1 Output will load shed. A value of ZERO (0) disables load shed. A value of ONE (1) is least priority (sheds first), a value of 3 highest priority (sheds last).
- **TEM_Aux2_LoadShed_Level** – This is the level at which the Aux2 Output will load shed. A value of ZERO (0) disables load shed. A value of ONE (1) is least priority (sheds first), a value of 3 highest priority (sheds last).
- **TEM_Aux3_LoadShed_Level** – This is the level at which the Aux3 Output will load shed. A value of ZERO (0) disables load shed. A value of ONE (1) is least priority (sheds first), a value of 3 highest priority (sheds last).
- **TEM_Aux4_LoadShed_Level** – This is the level at which the Aux4 Output will load shed. A value of ZERO (0) disables load shed. A value of ONE (1) is least priority (sheds first), a value of 3 highest priority (sheds last).
- **TEM_Aux5_LoadShed_Level** – This is the level at which the Aux5 Output will load shed. A value of ZERO (0) disables load shed. A value of ONE (1) is least priority (sheds first), a value of 3 highest priority (sheds last).

- **TEM_Aux6_LoadShed_Level** – This is the level at which the Aux6 Output will load shed. A value of ZERO (0) disables load shed. A value of ONE (1) is least priority (sheds first), a value of 3 highest priority (sheds last).
- **TEM_Aux7_LoadShed_Level** – This is the level at which the Aux7 Output will load shed. A value of ZERO (0) disables load shed. A value of ONE (1) is least priority (sheds first), a value of 3 highest priority (sheds last).
- **TEM_Aux8_LoadShed_Level** – This is the level at which the Aux8 Output will load shed. A value of ZERO (0) disables load shed. A value of ONE (1) is least priority (sheds first), a value of 3 highest priority (sheds last).
- **TEM_Aux9_LoadShed_Level** – This is the level at which the Aux9 Output will load shed. A value of ZERO (0) disables load shed. A value of ONE (1) is least priority (sheds first), a value of 3 highest priority (sheds last).
- **TEM_Aux10_LoadShed_Level** – This is the level at which the Aux10 Output will load shed. A value of ZERO (0) disables load shed. A value of ONE (1) is least priority (sheds first), a value of 3 highest priority (sheds last).
- **TEM_Aux11_LoadShed_Level** – This is the level at which the Aux11 Output will load shed. A value of ZERO (0) disables load shed. A value of ONE (1) is least priority (sheds first), a value of 3 highest priority (sheds last).
- **TEM_Aux12_LoadShed_Level** – This is the level at which the Aux12 Output will load shed. A value of ZERO (0) disables load shed. A value of ONE (1) is least priority (sheds first), a value of 3 highest priority (sheds last).

Parts Associated with This Feature:
See the list at the beginning of this section.

How to Test This Feature:
1. Turn key to accessory or IGN key-state.
2. Activate first in-cab switch.
3. Verify that RPM output #1 is providing battery voltage.
4. Deactivate first in-cab switch.
5. Apply 12V to RPM input #1.
6. Verify that RPM output #1 is providing battery voltage.
7. Apply GND to RPM input #1.
8. Verify that RPM output #1 shuts off.

Continue the above testing procedure for each RPM switch location.

Note: This feature uses body controller-based software controls which can be diagnosed with The International® Diamond Logic® Builder software (see local dealer if not owned).

References:

Refer to the applicable International® Circuit Diagrams and Service Manuals.

26.19. 60AAJ: BDY INTG, RPM (3) Mounted Inside Cab behind Driver Seat; Max. 20-AMP per Channel, Max. 80-AMP Total; Includes Three Modules with 3-Switch Packs Containing Latched Switches.

Feature Applicability to Vehicle Platforms:

- Heavy Vocational (HV)
- Medium Vocational (MV)
- Heavy Extreme (HX) 2021 and Newer

Extended Description: Feature 60AAJ includes three Remote Power Modules (RPMs) mounted in the cab behind the driver seat. Included with this feature are eighteen 2-position latched switches located in the Instrument Panel. Each RPM output can provide up to 20-Amps maximum with a total of 80-Amps maximum per module.

System Block Diagram:

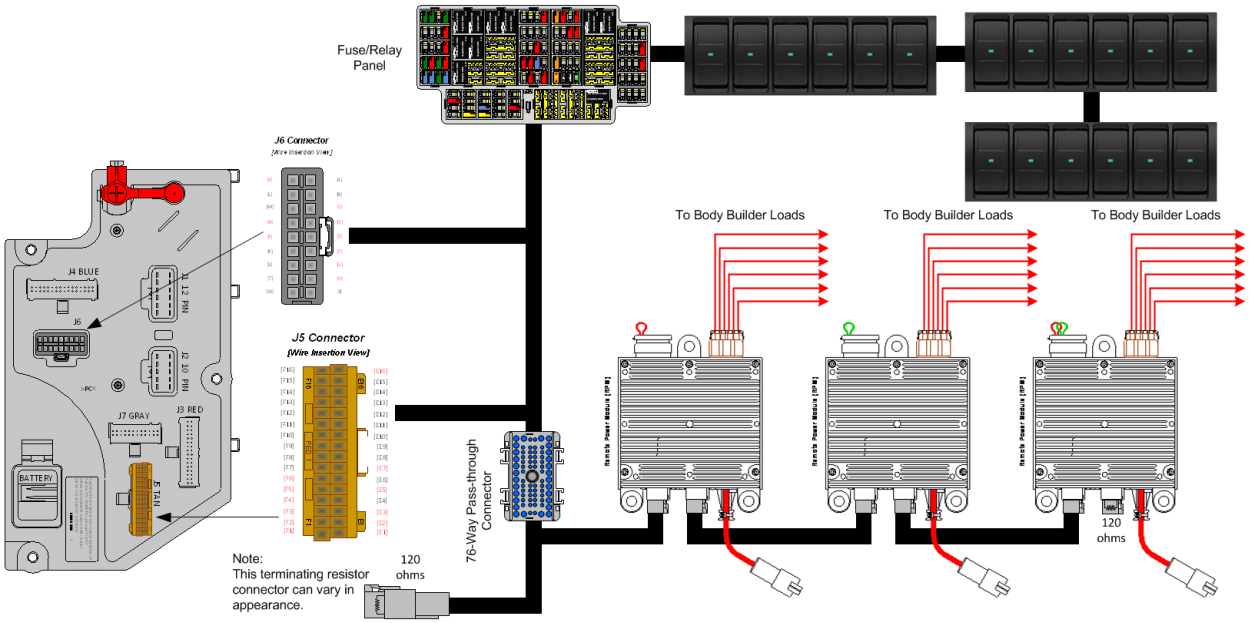

Body Controller Software Feature Codes:

- 597252 - BCM PROG, REMOTE POWER MOD #4 WITH LATCHED SWITCHES

Feature code 60AAJ (597252) installs the number 4 Remote Power Module (RPM) and switches 13-18.
The feature can be installed alone or in conjunction with other RPMs.
When used with other RPMs, switches 1-12 are added and configured by special unadvertised software feature codes. These codes are determined by the number of additional features that use the RPM resources.
The following codes should be added after all other features are added to the vehicle.

60ACA = 597194 – This feature should be added if there are features already using five RPM inputs/outputs. (BCM PROG, AUXILIARY LOAD #1)
60ACB = 597195 – This feature should be added if there are features already using four RPM inputs/outputs. (BCM PROG, AUXILIARY LOAD 2 ROCKER SW)
60ACC = 597196 – This feature should be added if there are features already using three RPM inputs/outputs. (BCM PROG, AUXILIARY LOAD 3 ROCKER SW)
60ACD = 597197 – This feature should be added if there are features already using two RPM inputs/outputs. (BCM PROG, AUXILIARY LOAD 4 ROCKER SW)
60ACJ = 597198 – This feature should be added if there are features already using one RPM input/output. (BCM PROG, AUXILIARY LOAD 5 ROCKER SW)
60ACK = 597199 – This feature should be added if there no other features using any RPM inputs/outputs. (BCM PROG, AUXILIARY LOAD 6 ROCKER SW)
60ACV = 597202 – This feature should be added to add the second RPM (60AAB). (BCM PROG, ADDITIONAL 6 AUXILIARY SW)

Body Controller Software Feature Code Parameters:

Parameter	ID	Description	Default	Units	Min	Max	Step
597194 - BCM PROG, AUXILIARY LOAD #1 For Rocker Switch							
TEM_Aux1_Output_Fuse_Param	1990	This is the maximum current Aux 1 Output can source before the virtual fusing turns the output off.	20	A	0	20	0.1
TEM_Aux1_Loadshed_Level	3273	Loadshed level parameter for TEM Aux Switch 1	1	No Units	0	3	1
597195 - BCM PROG, AUXILIARY LOAD For (2) Rocker Switch							
TEM_Aux1_Output_Fuse_Param	1990	This is the maximum current Aux 1 Output can source before the virtual fusing turns the output off.	20	A	0	20	0.1
TEM_Aux2_Output_Fuse_Param	1991	This is the maximum current Aux 2 Output can source before the virtual fusing turns the output off.	20	A	0	20	0.1
TEM_Aux1_Loadshed_Level	3273	Loadshed level parameter for TEM Aux Switch 1	1	No Units	0	3	1
TEM_Aux2_Loadshed_Level	3274	Loadshed level parameter for TEM Aux Switch 2	1	No Units	0	3	1
597196 - BCM PROG, AUXILIARY LOAD For (3) Rocker Switch							
TEM_Aux1_Output_Fuse_Param	1990	This is the maximum current Aux 1 Output can source before the virtual fusing turns the output off.	20	A	0	20	0.1
TEM_Aux2_Output_Fuse_Param	1991	This is the maximum current Aux 2 Output can source before the virtual fusing turns the output off.	20	A	0	20	0.1
TEM_Aux3_Output_Fuse_Param	1992	This is the maximum current Aux 3 Output can source before the virtual fusing turns the output off.	20	A	0	20	0.1
TEM_Aux1_Loadshed_Level	3273	Loadshed level parameter for TEM Aux Switch 1	1	No Units	0	3	1
TEM_Aux2_Loadshed_Level	3274	Loadshed level parameter for TEM Aux Switch 2	1	No Units	0	3	1
TEM_Aux3_Loadshed_Level	3275	Loadshed level parameter for TEM Aux Switch 3	1	No Units	0	3	1
597197 - BCM PROG, AUXILIARY LOAD For (4) Rocker Switch							

TEM_Aux1_Output_Fuse_Param	1990	This is the maximum current Aux 1 Output can source before the virtual fusing turns the output off.	20	A	0	20	0.1
TEM_Aux2_Output_Fuse_Param	1991	This is the maximum current Aux 2 Output can source before the virtual fusing turns the output off.	20	A	0	20	0.1
TEM_Aux3_Output_Fuse_Param	1992	This is the maximum current Aux 3 Output can source before the virtual fusing turns the output off.	20	A	0	20	0.1
TEM_Aux4_Output_Fuse_Param	1995	This is the maximum current Aux 4 Output can source before the virtual fusing turns the output off.	20	A	0	20	0.1
TEM_Aux1_Loadshed_Level	3273	Loadshed level parameter for TEM Aux Switch 1	1	No Units	0	3	1
TEM_Aux2_Loadshed_Level	3274	Loadshed level parameter for TEM Aux Switch 2	1	No Units	0	3	1
TEM_Aux3_Loadshed_Level	3275	Loadshed level parameter for TEM Aux Switch 3	1	No Units	0	3	1
TEM_Aux4_Loadshed_Level	3276	Loadshed level parameter for TEM Aux Switch 4	1	No Units	0	3	1
597198 - BCM PROG, AUXILIARY LOAD For (5) Rocker Switch							
TEM_Aux1_Output_Fuse_Param	1990	This is the maximum current Aux 1 Output can source before the virtual fusing turns the output off.	20	A	0	20	0.1
TEM_Aux2_Output_Fuse_Param	1991	This is the maximum current Aux 2 Output can source before the virtual fusing turns the output off.	20	A	0	20	0.1
TEM_Aux3_Output_Fuse_Param	1992	This is the maximum current Aux 3 Output can source before the virtual fusing turns the output off.	20	A	0	20	0.1
TEM_Aux4_Output_Fuse_Param	1995	This is the maximum current Aux 4 Output can source before the virtual fusing turns the output off.	20	A	0	20	0.1
TEM_Aux5_Output_Fuse_Param	1999	This is the maximum current Aux 5 Output can source before the virtual fusing turns the output off.	20	A	0	20	0.1
TEM_Aux1_Loadshed_Level	3273	Loadshed level parameter for TEM Aux Switch 1	1	No Units	0	3	1
TEM_Aux2_Loadshed_Level	3274	Loadshed level parameter for TEM Aux Switch 2	1	No Units	0	3	1
TEM_Aux3_Loadshed_Level	3275	Loadshed level parameter for TEM Aux Switch 3	1	No Units	0	3	1
TEM_Aux4_Loadshed_Level	3276	Loadshed level parameter for TEM Aux Switch 4	1	No Units	0	3	1
TEM_Aux5_Loadshed_Level	3277	Loadshed level parameter for TEM Aux Switch 5	1	No Units	0	3	1
597199 - BCM PROG, AUXILIARY LOAD For (6) Rocker Switch							
TEM_Aux1_Output_Fuse_Param	1990	This is the maximum current Aux 1 Output can source before the virtual fusing turns the output off.	20	A	0	20	0.1
TEM_Aux2_Output_Fuse_Param	1991	This is the maximum current Aux 2 Output can source before the virtual fusing turns the output off.	20	A	0	20	0.1
TEM_Aux3_Output_Fuse_Param	1992	This is the maximum current Aux 3 Output can source before the virtual fusing turns the output off.	20	A	0	20	0.1

TEM_Aux4_Output_Fuse_Param	1995	This is the maximum current Aux 4 Output can source before the virtual fusing turns the output off.	20	A	0	20	0.1
TEM_Aux5_Output_Fuse_Param	1999	This is the maximum current Aux 5 Output can source before the virtual fusing turns the output off.	20	A	0	20	0.1
TEM_Aux6_Output_Fuse_Param	2000	This is the maximum current Aux 6 Output can source before the virtual fusing turns the output off.	20	A	0	20	0.1
TEM_Aux1_Loadshed_Level	3273	Loadshed level parameter for TEM Aux Switch 1	1	No Units	0	3	1
TEM_Aux2_Loadshed_Level	3274	Loadshed level parameter for TEM Aux Switch 2	1	No Units	0	3	1
TEM_Aux3_Loadshed_Level	3275	Loadshed level parameter for TEM Aux Switch 3	1	No Units	0	3	1
TEM_Aux4_Loadshed_Level	3276	Loadshed level parameter for TEM Aux Switch 4	1	No Units	0	3	1
TEM_Aux5_Loadshed_Level	3277	Loadshed level parameter for TEM Aux Switch 5	1	No Units	0	3	1
TEM_Aux6_Loadshed_Level	3278	Loadshed level parameter for TEM Aux Switch 6	1	No Units	0	3	1
597202 – BCM PROG, ADDITIONAL 6 AUXILIARY SW							
TEM_Aux7_Output_Fuse_Param	2100	This is the maximum current Aux 7 Output can source before the virtual fusing turns the output off.	20	A	0	20	0.1
TEM_Aux8_Output_Fuse_Param	2101	This is the maximum current Aux 8 Output can source before the virtual fusing turns the output off.	20	A	0	20	0.1
TEM_Aux9_Output_Fuse_Param	2102	This is the maximum current Aux 9 Output can source before the virtual fusing turns the output off.	20	A	0	20	0.1
TEM_Aux10_Output_Fuse_Param	2103	This is the maximum current Aux 10 Output can source before the virtual fusing turns the output off.	20	A	0	20	0.1
TEM_Aux11_Output_Fuse_Param	2104	This is the maximum current Aux 11 Output can source before the virtual fusing turns the output off.	20	A	0	20	0.1
TEM_Aux12_Output_Fuse_Param	2105	This is the maximum current Aux 12 Output can source before the virtual fusing turns the output off.	20	A	0	20	0.1
TEM_Aux7_Loadshed_Level	3339	Loadshed level parameter for TEM Aux Switch 7	1	No Units	0	3	1
TEM_Aux8_Loadshed_Level	3340	Loadshed level parameter for TEM Aux Switch 8	1	No Units	0	3	1
TEM_Aux9_Loadshed_Level	3341	Loadshed level parameter for TEM Aux Switch 9	1	No Units	0	3	1
TEM_Aux10_Loadshed_Level	3342	Loadshed level parameter for TEM Aux Switch 10	1	No Units	0	3	1
TEM_Aux11_Loadshed_Level	3343	Loadshed level parameter for TEM Aux Switch 11	1	No Units	0	3	1
TEM_Aux12_Loadshed_Level	3344	Loadshed level parameter for TEM Aux Switch 12	1	No Units	0	3	1
597252 - BCM PROG, REMOTE POWER MOD #4							
TEM_Aux13_Output_Fuse_Param	2215	This is the maximum current Aux 13 Output can source before the virtual fusing turns the output off.	20	A	0	20	0.1

TEM_Aux14_Output_Fuse_Param	2216	This is the maximum current Aux 14 Output can source before the virtual fusing turns the output off.	20	A	0	20	0.1
TEM_Aux15_Output_Fuse_Param	2217	This is the maximum current Aux 15 Output can source before the virtual fusing turns the output off.	20	A	0	20	0.1
TEM_Aux16_Output_Fuse_Param	2218	This is the maximum current Aux 16 Output can source before the virtual fusing turns the output off.	20	A	0	20	0.1
TEM_Aux17_Output_Fuse_Param	2219	This is the maximum current Aux 17 Output can source before the virtual fusing turns the output off.	20	A	0	20	0.1
TEM_Aux18_Output_Fuse_Param	2220	This is the maximum current Aux 18 Output can source before the virtual fusing turns the output off.	20	A	0	20	0.1
RPM4_Channel13_Loadshed_Level	3272	This is the level at which the RPM4 channel 13 Output will load shed.	1	No Units	0	3	1
RPM4_Channel14_Loadshed_Level	3315	This is the level at which the RPM4 channel 14 Output will load shed.	1	No Units	0	3	1
RPM4_Channel15_Loadshed_Level	3316	This is the level at which the RPM4 channel 15 Output will load shed.	1	No Units	0	3	1
RPM4_Channel16_Loadshed_Level	3317	This is the level at which the RPM4 channel 16 Output will load shed.	1	No Units	0	3	1
RPM4_Channel17_Loadshed_Level	3318	This is the level at which the RPM4 channel 18 Output will load shed.	1	No Units	0	3	1
RPM4_Channel18_Loadshed_Level	3319	This is the level at which the RPM4 channel 19 Output will load shed.	1	No Units	0	3	1

Parameter Definitions:

- **TEM_Aux1_Output_Fuse_Param** – This parameter sets the limit (in AMPS) of the current flowing from the output labeled Aux_Switch_1_Output of RPM #1. Default is set at 20-amps.
- **TEM_Aux2_Output_Fuse_Param** – This parameter sets the limit (in AMPS) of the current flowing from the output labeled Aux_Switch_2_Output of RPM #1. Default is set at 20-amps.
- **TEM_Aux3_Output_Fuse_Param** – This parameter sets the limit (in AMPS) of the current flowing from the output labeled Aux_Switch_3_Output of RPM #1. Default is set at 20-amps.
- **TEM_Aux4_Output_Fuse_Param** – This parameter sets the limit (in AMPS) of the current flowing from the output labeled Aux_Switch_4_Output of RPM #1. Default is set at 20-amps.
- **TEM_Aux5_Output_Fuse_Param** – This parameter sets the limit (in AMPS) of the current flowing from the output labeled Aux_Switch_5_Output of RPM #1. Default is set at 20-amps.
- **TEM_Aux6_Output_Fuse_Param** – This parameter sets the limit (in AMPS) of the current flowing from the output labeled Aux_Switch_6_Output of RPM #1. Default is set at 20-amps.
- **TEM_Aux7_Output_Fuse_Param** – This parameter sets the limit (in AMPS) of the current flowing from the output labeled Aux_Switch_7_Output of RPM #2. Default is set at 20-amps.

- **TEM_Aux8_Output_Fuse_Param** – This parameter sets the limit (in AMPS) of the current flowing from the output labeled Aux_Switch_8_Output of RPM #2. Default is set at 20-amps.
- **TEM_Aux9_Output_Fuse_Param** – This parameter sets the limit (in AMPS) of the current flowing from the output labeled Aux_Switch_9_Output of RPM #2. Default is set at 20-amps.
- **TEM_Aux10_Output_Fuse_Param** – This parameter sets the limit (in AMPS) of the current flowing from the output labeled Aux_Switch_10_Output of RPM #2. Default is set at 20-amps.
- **TEM_Aux11_Output_Fuse_Param** – This parameter sets the limit (in AMPS) of the current flowing from the output labeled Aux_Switch_11_Output of RPM #2. Default is set at 20-amps.
- **TEM_Aux12_Output_Fuse_Param** – This parameter sets the limit (in AMPS) of the current flowing from the output labeled Aux_Switch_12_Output of RPM #2. Default is set at 20-amps.
- **TEM_Aux13_Output_Fuse_Param** – This is the maximum current Aux 13 Output can source before the virtual fusing turns the output off. Default is 20-amps.
- **TEM_Aux14_Output_Fuse_Param** – This is the maximum current Aux 14 Output can source before the virtual fusing turns the output off. Default is 20-amps.
- **TEM_Aux15_Output_Fuse_Param** – This is the maximum current Aux 15 Output can source before the virtual fusing turns the output off. Default is 20-amps.
- **TEM_Aux16_Output_Fuse_Param** – This is the maximum current Aux 16 Output can source before the virtual fusing turns the output off. Default is 20-amps.
- **TEM_Aux17_Output_Fuse_Param** – This is the maximum current Aux 17 Output can source before the virtual fusing turns the output off. Default is 20-amps.
- **TEM_Aux18_Output_Fuse_Param** – This is the maximum current Aux 18 Output can source before the virtual fusing turns the output off. Default is 20-amps.
- **TEM_Aux1_LoadShed_Level** – This is the level at which the Aux1 Output will load shed. A value of ZERO (0) disables load shed. A value of ONE (1) is least priority (sheds first), a value of 3 highest priority (sheds last).
- **TEM_Aux2_LoadShed_Level** – This is the level at which the Aux2 Output will load shed. A value of ZERO (0) disables load shed. A value of ONE (1) is least priority (sheds first), a value of 3 highest priority (sheds last).
- **TEM_Aux3_LoadShed_Level** – This is the level at which the Aux3 Output will load shed. A value of ZERO (0) disables load shed. A value of ONE (1) is least priority (sheds first), a value of 3 highest priority (sheds last).

- **TEM_Aux4_LoadShed_Level** – This is the level at which the Aux4 Output will load shed. A value of ZERO (0) disables load shed. A value of ONE (1) is least priority (sheds first), a value of 3 highest priority (sheds last).
- **TEM_Aux5_LoadShed_Level** – This is the level at which the Aux5 Output will load shed. A value of ZERO (0) disables load shed. A value of ONE (1) is least priority (sheds first), a value of 3 highest priority (sheds last).
- **TEM_Aux6_LoadShed_Level** – This is the level at which the Aux6 Output will load shed. A value of ZERO (0) disables load shed. A value of ONE (1) is least priority (sheds first), a value of 3 highest priority (sheds last).
- **TEM_Aux7_LoadShed_Level** – This is the level at which the Aux7 Output will load shed. A value of ZERO (0) disables load shed. A value of ONE (1) is least priority (sheds first), a value of 3 highest priority (sheds last).
- **TEM_Aux8_LoadShed_Level** – This is the level at which the Aux8 Output will load shed. A value of ZERO (0) disables load shed. A value of ONE (1) is least priority (sheds first), a value of 3 highest priority (sheds last).
- **TEM_Aux9_LoadShed_Level** – This is the level at which the Aux9 Output will load shed. A value of ZERO (0) disables load shed. A value of ONE (1) is least priority (sheds first), a value of 3 highest priority (sheds last).
- **TEM_Aux10_LoadShed_Level** – This is the level at which the Aux10 Output will load shed. A value of ZERO (0) disables load shed. A value of ONE (1) is least priority (sheds first), a value of 3 highest priority (sheds last).
- **TEM_Aux11_LoadShed_Level** – This is the level at which the Aux11 Output will load shed. A value of ZERO (0) disables load shed. A value of ONE (1) is least priority (sheds first), a value of 3 highest priority (sheds last).
- **TEM_Aux12_LoadShed_Level** – This is the level at which the Aux12 Output will load shed. A value of ZERO (0) disables load shed. A value of ONE (1) is least priority (sheds first), a value of 3 highest priority (sheds last).
- **RPM4_Channel13_LoadShed_Level** – This is the level at which the RPM4 channel 13 Output will load shed. A value of ZERO (0) disables load shed. A value of ONE (1) is least priority (sheds first), a value of 3 highest priority (sheds last).
- **RPM4_Channel14_LoadShed_Level** – This is the level at which the RPM4 channel 14 Output will load shed. A value of ZERO (0) disables load shed. A value of ONE (1) is least priority (sheds first), a value of 3 highest priority (sheds last).
- **RPM4_Channel15_LoadShed_Level** – This is the level at which the RPM4 channel 15 Output will load shed. A value of ZERO (0) disables load shed. A value of ONE (1) is least priority (sheds first), a value of 3 highest priority (sheds last).
- **RPM4_Channel16_LoadShed_Level** – This is the level at which the RPM4 channel 16 Output will load shed. A value of ZERO (0) disables load shed. A value of ONE (1) is least priority (sheds first), a value of 3 highest priority (sheds last).

- **RPM4_Channel17_LoadShed_Level** – This is the level at which the RPM4 channel 17 Output will load shed. A value of ZERO (0) disables load shed. A value of ONE (1) is least priority (sheds first), a value of 3 highest priority (sheds last).
- **RPM4_Channel18_LoadShed_Level** – This is the level at which the RPM4 channel 18 Output will load shed. A value of ZERO (0) disables load shed. A value of ONE (1) is least priority (sheds first), a value of 3 highest priority (sheds last).

Parts Associated with This Feature:
See the list at the beginning of this section.

How to Test This Feature:
1. Turn key to accessory or IGN key-state.
2. Activate first in-cab switch.
3. Verify that RPM output #1 is providing battery voltage.
4. Deactivate first in-cab switch.
5. Apply 12V to RPM input #1.
6. Verify that RPM output #1 is providing battery voltage.
7. Apply GND to RPM input #1.
8. Verify that RPM output #1 shuts off.

Continue the above testing procedure for each RPM switch location.

Note: This feature uses body controller-based software controls which can be diagnosed with The International® Diamond Logic® Builder software (see local dealer if not owned).

References:
Refer to the applicable International® Circuit Diagrams and Service Manuals.

26.20. 60AAK: BDY INTG, RPM (2) {SPECIAL} Mounted Inside Cab behind Driver Seat; Max. 20-AMP per Channel, Max. 80-AMP Total; Includes One Module with Switch Pack Containing Six Latched Switches and One Module with Hardware Only.

Feature Applicability to Vehicle Platforms:

- Heavy Vocational (HV)
- Medium Vocational (MV)
- Heavy Extreme (HX) 2021 and Newer

Extended Description: Feature 60AAK includes two Remote Power Module (RPMs) mounted in the cab behind the driver seat. Included with this feature are six 2-position latched switches located in the Instrument Panel for control of the outputs on RPM 1. RPM 2 is included with wiring and hardware only. Each RPM output can provide up to 20-Amps maximum with a total of 80-Amps maximum per module.

System Block Diagram:

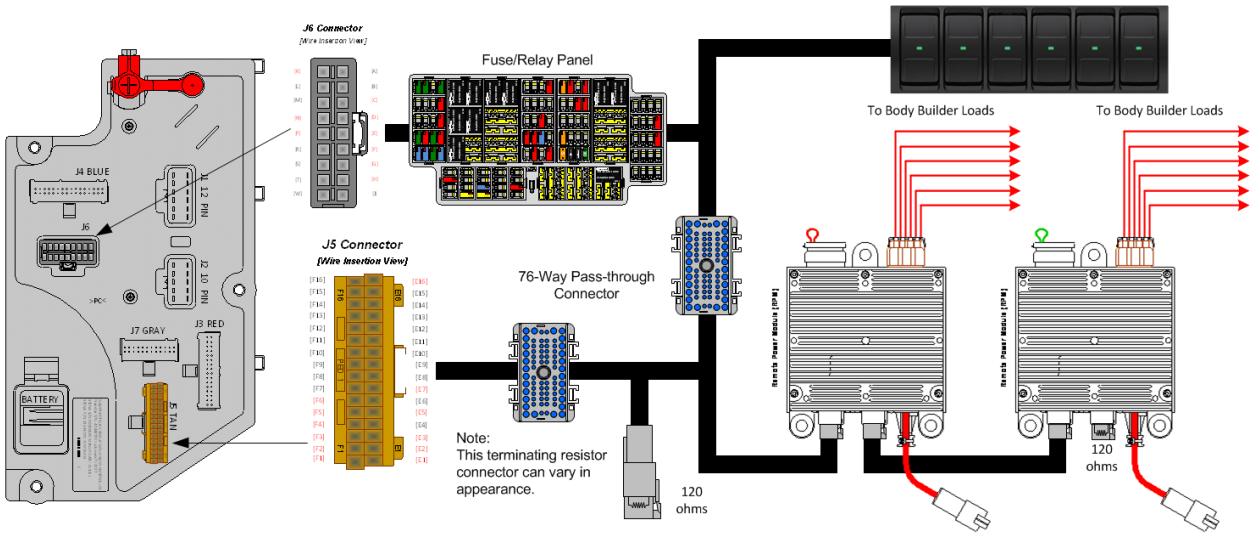

Body Controller Software Feature Codes:

Note: Feature code 60AAK is configured by special unadvertised software feature codes. These codes are determined by the number of additional features that use the RPM resources. The following codes should be added after all other features are added to the vehicle.
60ACA = 597194 – This feature should be added if there are features already using five RPM inputs/outputs. (BCM PROG, AUXILIARY LOAD #1)
60ACB = 597195 – This feature should be added if there are features already using four RPM inputs/outputs. (BCM PROG, AUXILIARY LOAD 2 ROCKER SW)
60ACC = 597196 – This feature should be added if there are features already using three RPM inputs/outputs. (BCM PROG, AUXILIARY LOAD 3 ROCKER SW)

60ACD = 597197 – This feature should be added if there are features already using two RPM inputs/outputs. (BCM PROG, AUXILIARY LOAD 4 ROCKER SW)
60ACJ = 597198 – This feature should be added if there are features already using one RPM input/output. (BCM PROG, AUXILIARY LOAD 5 ROCKER SW)
60ACK = 597199 – This feature should be added if there no other features using any RPM inputs/outputs. (BCM PROG, AUXILIARY LOAD 6 ROCKER SW)

Body Controller Software Feature Code Parameters:

Parameter	ID	Description	Default	Units	Min	Max	Step
597194 - BCM PROG, AUXILIARY LOAD #1 For Rocker Switch							
TEM_Aux1_Output_Fuse_Param	1990	This is the maximum current Aux 1 Output can source before the virtual fusing turns the output off.	20	A	0	20	0.1
TEM_Aux1_Loadshed_Level	3273	Loadshed level parameter for TEM Aux Switch 1	1	No Units	0	3	1
597195 - BCM PROG, AUXILIARY LOAD For (2) Rocker Switch							
TEM_Aux1_Output_Fuse_Param	1990	This is the maximum current Aux 1 Output can source before the virtual fusing turns the output off.	20	A	0	20	0.1
TEM_Aux2_Output_Fuse_Param	1991	This is the maximum current Aux 2 Output can source before the virtual fusing turns the output off.	20	A	0	20	0.1
TEM_Aux1_Loadshed_Level	3273	Loadshed level parameter for TEM Aux Switch 1	1	No Units	0	3	1
TEM_Aux2_Loadshed_Level	3274	Loadshed level parameter for TEM Aux Switch 2	1	No Units	0	3	1
597196 - BCM PROG, AUXILIARY LOAD For (3) Rocker Switch							
TEM_Aux1_Output_Fuse_Param	1990	This is the maximum current Aux 1 Output can source before the virtual fusing turns the output off.	20	A	0	20	0.1
TEM_Aux2_Output_Fuse_Param	1991	This is the maximum current Aux 2 Output can source before the virtual fusing turns the output off.	20	A	0	20	0.1
TEM_Aux3_Output_Fuse_Param	1992	This is the maximum current Aux 3 Output can source before the virtual fusing turns the output off.	20	A	0	20	0.1
TEM_Aux1_Loadshed_Level	3273	Loadshed level parameter for TEM Aux Switch 1	1	No Units	0	3	1
TEM_Aux2_Loadshed_Level	3274	Loadshed level parameter for TEM Aux Switch 2	1	No Units	0	3	1
TEM_Aux3_Loadshed_Level	3275	Loadshed level parameter for TEM Aux Switch 3	1	No Units	0	3	1
597197 - BCM PROG, AUXILIARY LOAD For (4) Rocker Switch							
TEM_Aux1_Output_Fuse_Param	1990	This is the maximum current Aux 1 Output can source before the virtual fusing turns the output off.	20	A	0	20	0.1
TEM_Aux2_Output_Fuse_Param	1991	This is the maximum current Aux 2 Output can source before the virtual fusing turns the output off.	20	A	0	20	0.1
TEM_Aux3_Output_Fuse_Param	1992	This is the maximum current Aux 3 Output can source before the virtual fusing turns the output off.	20	A	0	20	0.1

TEM_Aux4_Output_Fuse_Param	1995	This is the maximum current Aux 4 Output can source before the virtual fusing turns the output off.	20	A	0	20	0.1
TEM_Aux1_Loadshed_Level	3273	Loadshed level parameter for TEM Aux Switch 1	1	No Units	0	3	1
TEM_Aux2_Loadshed_Level	3274	Loadshed level parameter for TEM Aux Switch 2	1	No Units	0	3	1
TEM_Aux3_Loadshed_Level	3275	Loadshed level parameter for TEM Aux Switch 3	1	No Units	0	3	1
TEM_Aux4_Loadshed_Level	3276	Loadshed level parameter for TEM Aux Switch 4	1	No Units	0	3	1
597198 - BCM PROG, AUXILIARY LOAD For (5) Rocker Switch							
TEM_Aux1_Output_Fuse_Param	1990	This is the maximum current Aux 1 Output can source before the virtual fusing turns the output off.	20	A	0	20	0.1
TEM_Aux2_Output_Fuse_Param	1991	This is the maximum current Aux 2 Output can source before the virtual fusing turns the output off.	20	A	0	20	0.1
TEM_Aux3_Output_Fuse_Param	1992	This is the maximum current Aux 3 Output can source before the virtual fusing turns the output off.	20	A	0	20	0.1
TEM_Aux4_Output_Fuse_Param	1995	This is the maximum current Aux 4 Output can source before the virtual fusing turns the output off.	20	A	0	20	0.1
TEM_Aux5_Output_Fuse_Param	1999	This is the maximum current Aux 5 Output can source before the virtual fusing turns the output off.	20	A	0	20	0.1
TEM_Aux1_Loadshed_Level	3273	Loadshed level parameter for TEM Aux Switch 1	1	No Units	0	3	1
TEM_Aux2_Loadshed_Level	3274	Loadshed level parameter for TEM Aux Switch 2	1	No Units	0	3	1
TEM_Aux3_Loadshed_Level	3275	Loadshed level parameter for TEM Aux Switch 3	1	No Units	0	3	1
TEM_Aux4_Loadshed_Level	3276	Loadshed level parameter for TEM Aux Switch 4	1	No Units	0	3	1
TEM_Aux5_Loadshed_Level	3277	Loadshed level parameter for TEM Aux Switch 5	1	No Units	0	3	1
597199 - BCM PROG, AUXILIARY LOAD For (6) Rocker Switch							
TEM_Aux1_Output_Fuse_Param	1990	This is the maximum current Aux 1 Output can source before the virtual fusing turns the output off.	20	A	0	20	0.1
TEM_Aux2_Output_Fuse_Param	1991	This is the maximum current Aux 2 Output can source before the virtual fusing turns the output off.	20	A	0	20	0.1
TEM_Aux3_Output_Fuse_Param	1992	This is the maximum current Aux 3 Output can source before the virtual fusing turns the output off.	20	A	0	20	0.1
TEM_Aux4_Output_Fuse_Param	1995	This is the maximum current Aux 4 Output can source before the virtual fusing turns the output off.	20	A	0	20	0.1
TEM_Aux5_Output_Fuse_Param	1999	This is the maximum current Aux 5 Output can source before the virtual fusing turns the output off.	20	A	0	20	0.1
TEM_Aux6_Output_Fuse_Param	2000	This is the maximum current Aux 6 Output can source before the virtual fusing turns the output off.	20	A	0	20	0.1
TEM_Aux1_Loadshed_Level	3273	Loadshed level parameter for TEM Aux Switch 1	1	No Units	0	3	1

TEM_Aux2_Loadshed_Level	3274	Loadshed level parameter for TEM Aux Switch 2	1	No Units	0	3	1
TEM_Aux3_Loadshed_Level	3275	Loadshed level parameter for TEM Aux Switch 3	1	No Units	0	3	1
TEM_Aux4_Loadshed_Level	3276	Loadshed level parameter for TEM Aux Switch 4	1	No Units	0	3	1
TEM_Aux5_Loadshed_Level	3277	Loadshed level parameter for TEM Aux Switch 5	1	No Units	0	3	1
TEM_Aux6_Loadshed_Level	3278	Loadshed level parameter for TEM Aux Switch 6	1	No Units	0	3	1

Parameter Definitions:

- **TEM_Aux1_Output_Fuse_Param** – This parameter sets the limit (in AMPS) of the current flowing from the output labeled Aux_Switch_1_Output of RPM #1. Default is set at 20-amps.
- **TEM_Aux2_Output_Fuse_Param** – This parameter sets the limit (in AMPS) of the current flowing from the output labeled Aux_Switch_2_Output of RPM #1. Default is set at 20-amps.
- **TEM_Aux3_Output_Fuse_Param** – This parameter sets the limit (in AMPS) of the current flowing from the output labeled Aux_Switch_3_Output of RPM #1. Default is set at 20-amps.
- **TEM_Aux4_Output_Fuse_Param** – This parameter sets the limit (in AMPS) of the current flowing from the output labeled Aux_Switch_4_Output of RPM #1. Default is set at 20-amps.
- **TEM_Aux5_Output_Fuse_Param** – This parameter sets the limit (in AMPS) of the current flowing from the output labeled Aux_Switch_5_Output of RPM #1. Default is set at 20-amps.
- **TEM_Aux6_Output_Fuse_Param** – This parameter sets the limit (in AMPS) of the current flowing from the output labeled Aux_Switch_6_Output of RPM #1. Default is set at 20-amps.
- **TEM_Aux1_LoadShed_Level** – This is the level at which the Aux1 Output will load shed. A value of ZERO (0) disables load shed. A value of ONE (1) is least priority (sheds first), a value of 3 highest priority (sheds last).
- **TEM_Aux2_LoadShed_Level** – This is the level at which the Aux2 Output will load shed. A value of ZERO (0) disables load shed. A value of ONE (1) is least priority (sheds first), a value of 3 highest priority (sheds last).
- **TEM_Aux3_LoadShed_Level** – This is the level at which the Aux3 Output will load shed. A value of ZERO (0) disables load shed. A value of ONE (1) is least priority (sheds first), a value of 3 highest priority (sheds last).
- **TEM_Aux4_LoadShed_Level** – This is the level at which the Aux4 Output will load shed. A value of ZERO (0) disables load shed. A value of ONE (1) is least priority (sheds first), a value of 3 highest priority (sheds last).
- **TEM_Aux5_LoadShed_Level** – This is the level at which the Aux5 Output will load shed. A value of ZERO (0) disables load shed. A value of ONE (1) is least priority (sheds first), a value of 3 highest priority (sheds last).

- **TEM_Aux6_LoadShed_Level** – This is the level at which the Aux6 Output will load shed. A value of ZERO (0) disables load shed. A value of ONE (1) is least priority (sheds first), a value of 3 highest priority (sheds last).

Parts Associated with This Feature:
See the list at the beginning of this section.

How to Test This Feature:
1. Turn key to accessory or IGN key-state.
2. Activate first in-cab switch.
3. Verify that RPM output #1 is providing battery voltage.
4. Deactivate first in-cab switch.
5. Apply 12V to RPM input #1.
6. Verify that RPM output #1 is providing battery voltage.
7. Apply GND to RPM input #1.
8. Verify that RPM output #1 shuts off.

Continue the above testing procedure for each RPM switch location.

Note: This feature uses body controller-based software controls which can be diagnosed with The International® Diamond Logic® Builder software (see local dealer if not owned).

References:
Refer to the applicable International® Circuit Diagrams and Service Manuals.

26.21. 60AAL: BDY INTG, RPM {SPECIAL} Mounted Inside Cab behind Driver Seat; Max. 20-AMP per Channel, Max. 80-AMP Total; Includes Three Modules with Hardware Only.

Feature Applicability to Vehicle Platforms:

- Heavy Vocational (HV)
- Medium Vocational (MV)
- Heavy Extreme (HX) 2021 and Newer

Extended Description: Feature 60AAL includes three Remote Power Module (RPMs) mounted in the cab behind the driver seat. Included with this feature are wiring and hardware only for all three RPMs for use with custom logic. Each RPM output can provide up to 20-Amps maximum with a total of 80-Amps maximum per module.

System Block Diagram:

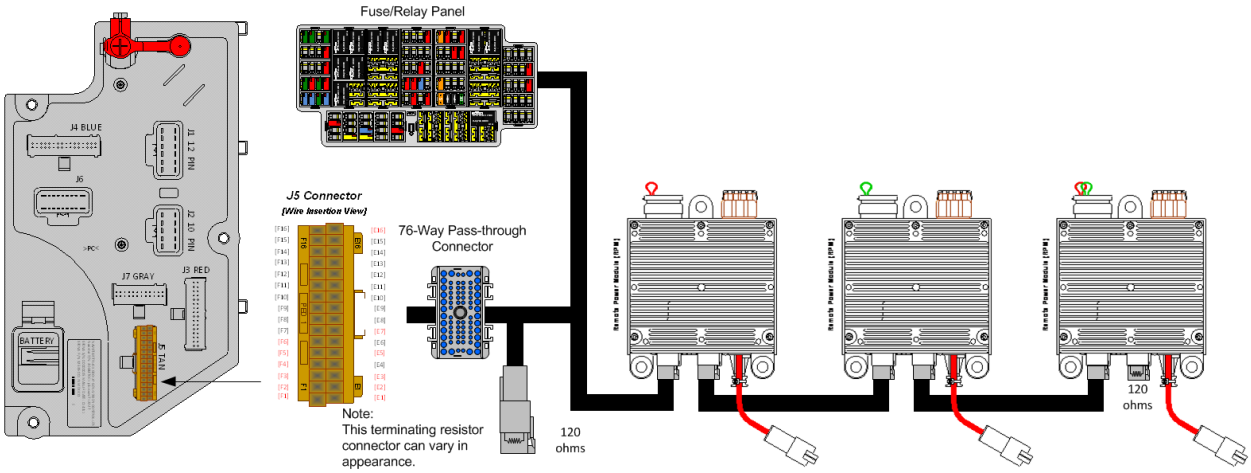

Parts Associated with This Feature:
See the list at the beginning of this section.

How to Test This Feature:
Verify the RPM is communicating via the 1939 CAN bus using Diamond Logic Builder software diagnostic mode.

Note: This feature uses body controller-based software controls which can be diagnosed with The International® Diamond Logic® Builder software (see local dealer if not owned).

References:
Refer to the applicable International® Circuit Diagrams and Service Manuals.

26.22. 60AAM: BDY INTG, RPM AUX Mounted on the Driver's Side Frame Rail at Rear of Frame; Up to 6-Outputs and 6-Inputs, Max. 20-AMP per Channel, Max. 80-AMP Total.

Feature Applicability to Vehicle Platforms:

- Heavy Vocational (HV)
- Medium Vocational (MV)
- Heavy Extreme (HX) 2021 and Newer

Extended Description: Feature 60AAM includes one Remote Power Module (RPM) mounted on the driver side frame rail at rear of frame. Included with this feature are wiring and hardware only for the RPM for use with custom logic. Each RPM output can provide up to 20-Amps maximum with a total of 80-Amps maximum per module.

System Block Diagram:

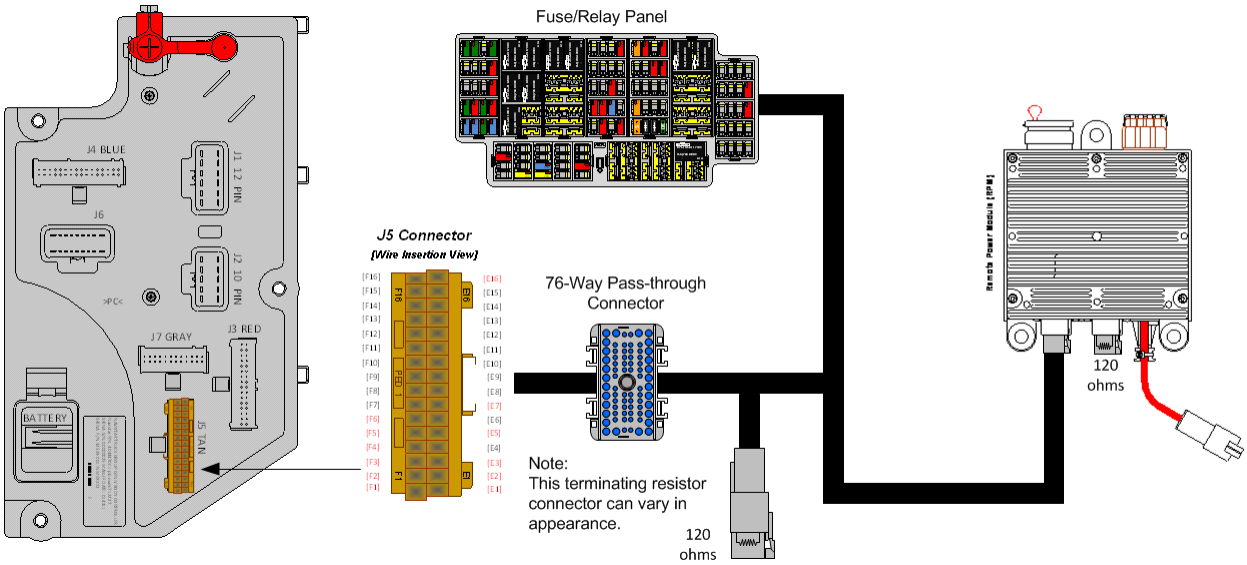

Parts Associated with This Feature:
See the list at the beginning of this section.

How to Test This Feature:
Verify the RPM is communicating via the 1939 CAN bus using Diamond Logic Builder software diagnostic mode.

Note: This feature uses body controller-based software controls which can be diagnosed with The International® Diamond Logic® Builder software (see local dealer if not owned).

References:
Refer to the applicable International® Circuit Diagrams and Service Manuals.

26.23. 60AAN: BDY INTG, RPM AUX Mounted Back of Cab; Up to 6-Outputs and Inputs, Max. 20-AMP per Channel, Max. 80-AMP Total

Feature Applicability to Vehicle Platforms:

- Heavy Vocational (HV)

Extended Description: Feature 60AAN includes one Remote Power Module (RPM) mounted on the battery box on MV or on a bracket under cab on HV at Back of Cab (BOC). Included with this feature are wiring and hardware only for the RPM for use with custom logic. Each RPM output can provide up to 20-Amps maximum with a total of 80-Amps maximum per module.

System Block Diagram:

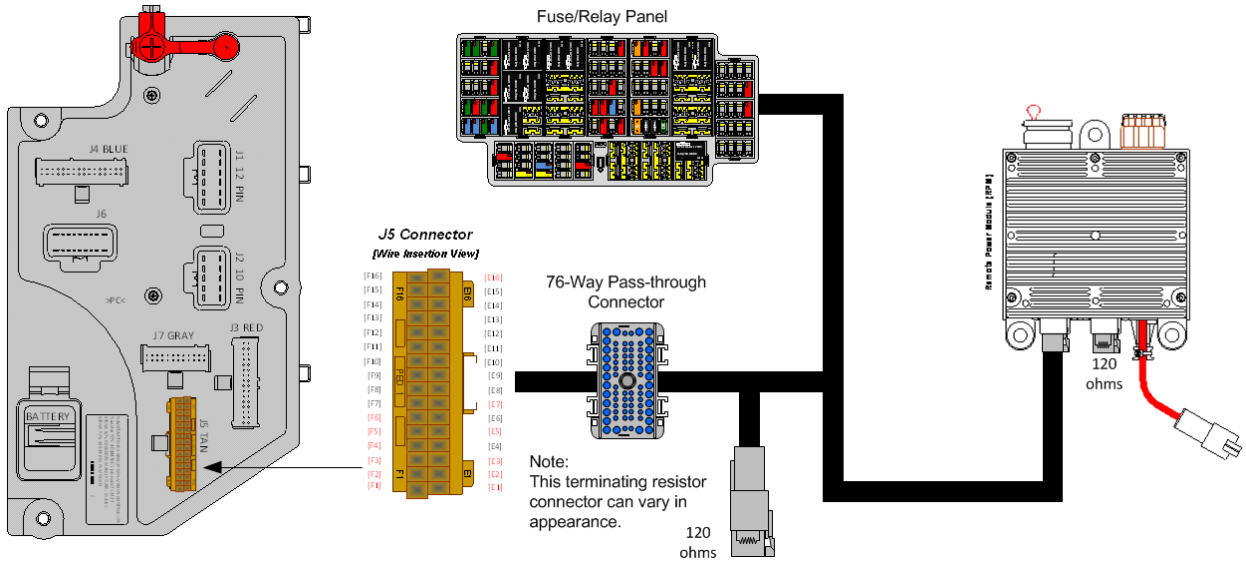

Parts Associated with This Feature:
See the list at the beginning of this section.

How to Test This Feature:
Verify the RPM is communicating via the 1939 CAN bus using Diamond Logic Builder software diagnostic mode.

Note: This feature uses body controller-based software controls which can be diagnosed with The International® Diamond Logic® Builder software (see local dealer if not owned).

References:
Refer to the applicable International® Circuit Diagrams and Service Manuals.

27. Power Window, Locks, Remote Keyless Entry

27.1. 16VCN: KEYLESS ENTRY SYSTEM REMOTE with Panic and Auxiliary Work Light Function, Includes One Key Fob (Transmitter).

Feature Applicability to Vehicle Platforms:

- Heavy Extreme (HX) 2021 and Newer

Extended Description: Driver and passenger power windows and door locks are available. The driver switches are located on the driver door trim and can control all door windows and locks. The passenger switches are located on the passenger door trim and can control the passenger door window and all locks. Window express down is available for all window switches by momentarily depressing the window down switch. The driver can “lockout” all non-driver controllable window switches by momentarily depressing the lower left switch on the driver door control.

Feature 16VCN requires that feature 16WJU or 16WJV in addition to one of the available Work Light accommodation features be installed on the vehicle in order to operate correctly. This feature assigns the Aux button on the keyless entry remote to control the work light output from the Body Control Module. When this feature is installed on the vehicle, the work light can be turned “ON” and “OFF” using the AUX button on the key fob.

System Block Diagram:

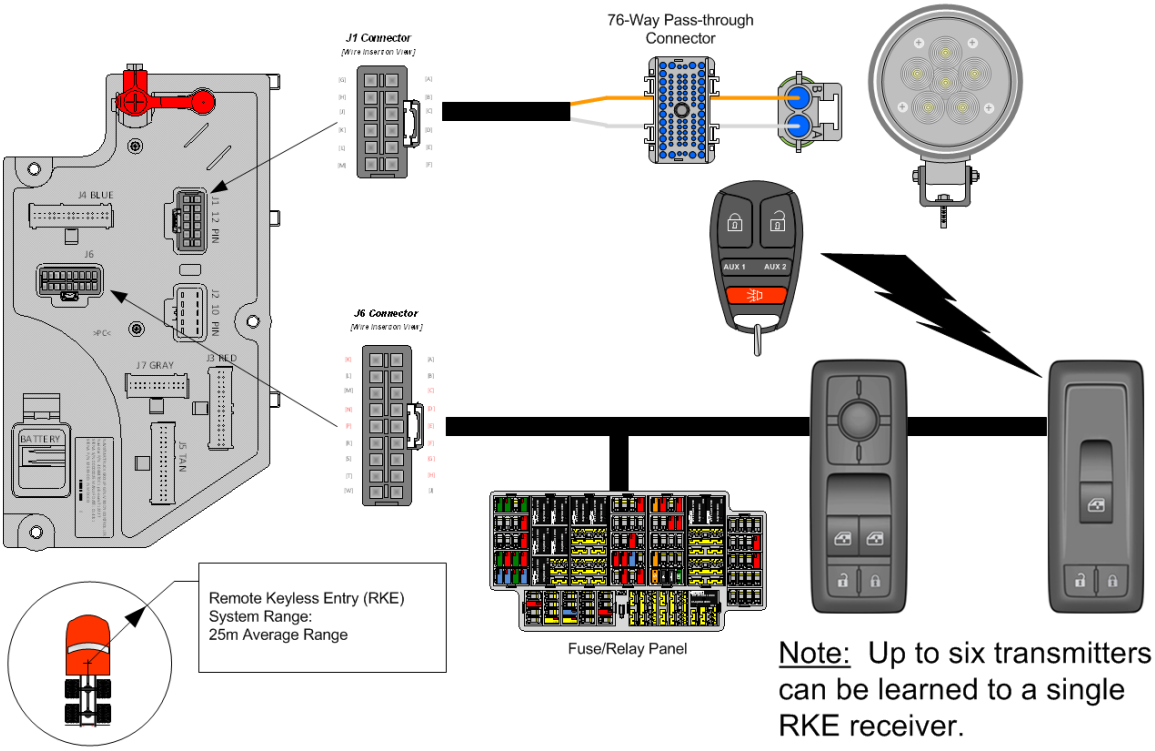

Body Controller Software Feature Codes:

- 597103 - BCM PROG, KEYLESS ENTRY REMOTE
- 597107 - BCM PROG, REMOTE FOR WORKLIGHTS
    - Both features are required

Body Controller Software Feature Code Parameters:

Parameter	ID	Description	Default	Units	Min	Max	Step
Panic_Enable	644	Enable/disable the Panic Mode for the Keyless Remote. A value of 1 enables and a value of 0 disables the feature.	ON	No Units	N/A	N/A	N/A
Chirp_Enable	647	Enable/disable the remote lock "chirp" for Keyless Remote. A value of 1 enables and a value of 0 disables the feature.	ON	No Units	N/A	N/A	N/A

Parameter Definitions:

- **Panic_Enable** – When this parameter is set to ON. This enables the Panic Mode feature of the keyless remote. The panic function chirps the horn on/off in unison with the headlights and park lights for three minutes when the panic button on the key fob is pressed, and the IGN switch is off. If the button is pressed prior to the time out period, the lights and horn will go off.

- **Chirp_Enable** - When this parameter is set to ON. This enables the Chirp feature for the keyless remote. The chirp feature results in a “chirping” sound when the truck is locked and unlocked.

Parts Associated with This Feature:

PART NUMBER	DESCRIPTION
DOOR POD RELATED PARTS	
4057699C1	CONTROL, ELECTRONIC, POD PASS DOOR W/RKE
4060791C1	CONTROL, ELECTRONIC, TRANSMITTER, RKE DOOR POD
WORK LIGHT (CHASSIS HARNESS CONNECTOR PARTS)	
1661778C1	2-WAY CONNECTOR BODY
1661875C1	WIRE TERMINAL 16-GAUGE
1661874C1	CONNECTOR LOCK
1661872C1	WIRE TERMINAL SEAL 16-GAUGE
WORK LIGHT (CHASSIS HARNESS MATING CONNECTOR PARTS)	
3543888C1	2-WAY CONNECTOR BODY
1661874C1	CONNECTOR LOCK
1667742C1	WIRE TERMINAL 16-GUAGE
1661872C1	WIRE TERMINAL SEAL 16-GAUGE

Parts Associated with Remote Keyless Entry System

Transmitter Learning Process:
This is the “learning” process for teaching a remote entry transmitter (“Key fob”) to a passenger door pod mounted receiver.
The learning process begins by following the idiosyncratic steps delineate below:

- Step 1 – Simultaneously depress and hold both the lock and unlock buttons located in the passenger door pod.
- Step 2 – With both the lock and unlock buttons depressed, push down and release the passenger door pod’s window control switch actuator at least five times within a time interval of two seconds or less.
- Step 3 – Both lock and unlock buttons (located in the passenger door pod) can be released after completion of step 3.
- Step 4 – Depress any of the five buttons located on the RKE transmitter (Key fob).

Exiting the Transmitter “Learning” process:

- The door pod will exit the “learning” process once it enters the sleep state.
- Once the “learning” state has been successfully entered [Step 2] and there is no activity after 30-seconds the passenger door pod will automatically exit the RKE (Key fob) “learn” mode.

Note: While the passenger door pod is in the “learning” process as many as six RKE (Key fobs) may be “learned” to that single passenger door pod device. Simply depress any of the five buttons on each RKE (Key fob) [Step 4] to “learn” it to the passenger door pod. It is also important to note that while “learning” multiple RKE (Key fobs) to a single passenger door pod device that care is taken to sequentially “learn” the RKE (Key fobs) one at a time so not to confuse the process with multiple RKE (Key fob) transmitters broadcasting differing and simultaneous IP messages to the passenger door pod device.

How to Test This Feature:
Refer to the applicable feature code using Diamond Logic® Builder programming and diagnostic software to test programmed parameter signal list.

Note: This feature uses body controller-based software controls which can be diagnosed with Navistar’s Diamond Logic® Builder software (see local dealer if not owned).

References:
Refer to the applicable International® Circuit Diagrams and Service Manuals

27.2. 16VCP: KEYLESS ENTRY SYSTEM REMOTE with Panic and Horn Beep Lock Confirmation, with Auxiliary Button for Work Light, Includes One Key Fob (Transmitter).

Feature Applicability to Vehicle Platforms:

- Heavy Extreme (HX) 2021 and Newer

Extended Description: Driver and passenger power windows and door locks are available. The driver switches are located on the driver door trim and can control all door windows and locks. The passenger switches are located on the passenger door trim and can control the passenger door window and all locks. Window express down is available for all window switches by momentarily depressing the window down switch. The driver can “lockout” all non-driver controllable window switches by momentarily depressing the lower left switch on the driver door control.

Feature 16VCN requires that feature 16WJU or 16WJV in addition to one of the available Work Light accommodation features be installed on the vehicle in order to operate correctly. This feature assigns the Aux button on the keyless entry remote to control the work light output from the Body Control Module. When this feature is installed on the vehicle, the work light can be turned “ON” and “OFF” using the AUX button on the key fob.

System Block Diagram:

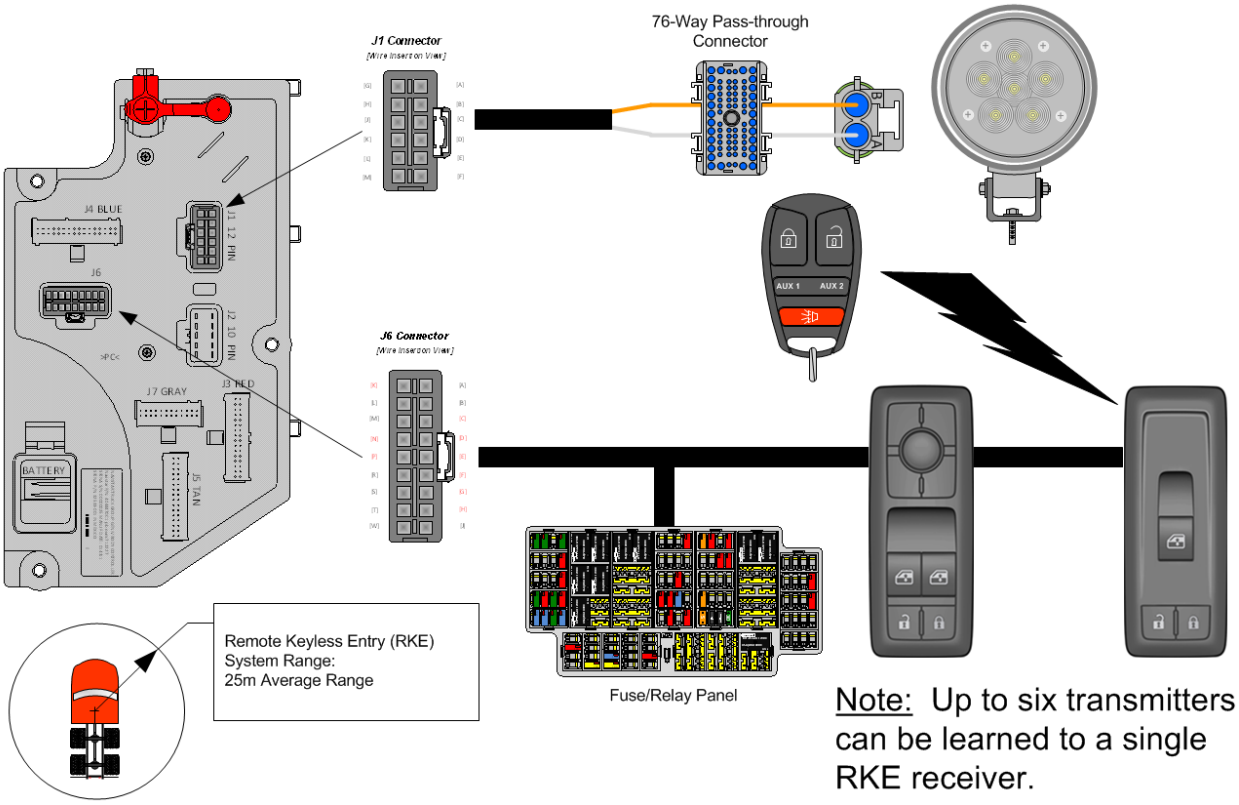

Body Controller Software Feature Codes:

- 597103 - BCM PROG, KEYLESS ENTRY REMOTE
- 597107 - BCM PROG, REMOTE FOR WORKLIGHTS
    - Both features are required

Body Controller Software Feature Code Parameters:

Parameter	ID	Description	Default	Units	Min	Max	Step
Panic_Enable	644	Enable/disable the Panic Mode for the Keyless Remote. A value of 1 enables and a value of 0 disables the feature.	ON	No Units	N/A	N/A	N/A
Chirp_Enable	647	Enable/disable the remote lock "chirp" for Keyless Remote. A value of 1 enables and a value of 0 disables the feature.	ON	No Units	N/A	N/A	N/A

Parameter Definitions:

- **Panic_Enable** – When this parameter is set to ON. This enables the Panic Mode feature of the keyless remote. The panic function chirps the horn on/off in unison with the headlights and park lights for three minutes when the panic button on the key fob is pressed, and the IGN switch is off. If the button is pressed prior to the time out period, the lights and horn will go off.

- **Chirp_Enable** - When this parameter is set to ON. This enables the Chirp feature for the keyless remote. The chirp feature results in a “chirping” sound when the truck is locked and unlocked.

Parts Associated with This Feature:

PART NUMBER	DESCRIPTION
DOOR POD RELATED PARTS	
4057699C1	CONTROL, ELECTRONIC, POD PASS DOOR W/RKE
4060791C1	CONTROL, ELECTRONIC, TRANSMITTER, RKE DOOR POD
WORK LIGHT (CHASSIS HARNESS CONNECTOR PARTS)	
1661778C1	2-WAY CONNECTOR BODY
1661875C1	WIRE TERMINAL 16-GAUGE
1661874C1	CONNECTOR LOCK
1661872C1	WIRE TERMINAL SEAL 16-GAUGE
WORK LIGHT (CHASSIS HARNESS MATING CONNECTOR PARTS)	
3543888C1	2-WAY CONNECTOR BODY
1661874C1	CONNECTOR LOCK
1667742C1	WIRE TERMINAL 16-GUAGE
1661872C1	WIRE TERMINAL SEAL 16-GAUGE

Parts Associated with Remote Keyless Entry System

Transmitter Learning Process:

This is the “learning” process for teaching a remote entry transmitter (“Key fob”) to a passenger door pod mounted receiver.

The learning process begins by following the idiosyncratic steps delineate below:

- Step 1 – Simultaneously depress and hold both the lock and unlock buttons located in the passenger door pod.
- Step 2 – With both the lock and unlock buttons depressed, push down and release the passenger door pod’s window control switch actuator at least five times within a time interval of two seconds or less.
- Step 3 – Both lock and unlock buttons (located in the passenger door pod) can be released after completion of step 3.
- Step 4 – Depress any of the five buttons located on the RKE transmitter (Key fob).

Exiting the Transmitter "Learning" process:

- The door pod will exit the "learning" process once it enters the sleep state.
- Once the "learning" state has been successfully entered [Step 2] and there is no activity after 30-seconds the passenger door pod will automatically exit the RKE (Key fob) "learn" mode.

Note: While the passenger door pod is in the "learning" process as many as six RKE (Key fobs) may be "learned" to that single passenger door pod device. Simply depress any of the five buttons on each RKE (Key fob) [Step 4] to "learn" it to the passenger door pod. It is also important to note that while "learning" multiple RKE (Key fobs) to a single passenger door pod device that care is taken to sequentially "learn" the RKE (Key fobs) one at a time so not to confuse the process with multiple RKE (Key fob) transmitters broadcasting differing and simultaneous IP messages to the passenger door pod device.

How to Test This Feature:

Refer to the applicable feature code using Diamond Logic® Builder programming and diagnostic software to test programmed parameter signal list.

Note: This feature uses body controller-based software controls which can be diagnosed with Navistar's Diamond Logic® Builder software (see local dealer if not owned).

References:

Refer to the applicable International® Circuit Diagrams and Service Manuals

27.3. 16WJU: WINDOW, POWER (2-Door) and Power Locks, Left and Right Doors.

Feature Applicability to Vehicle Platforms:

- Heavy Extreme (HX) 2021 and Newer

Extended Description: Driver and passenger power windows and door locks are available. The driver switches are located on the driver door trim and can control all door windows and locks. The passenger switches are located on the passenger door trim and can control the passenger door window and all locks. Window express down is available for all window switches by momentarily depressing the window down switch. The driver can “lockout” all non-driver controllable window switches by momentarily depressing the lower left switch on the driver door control.

Feature 16WJU provides driver and passenger door pods for the control of power windows and locks for standard and extended cabs with two doors.

System Block Diagram:

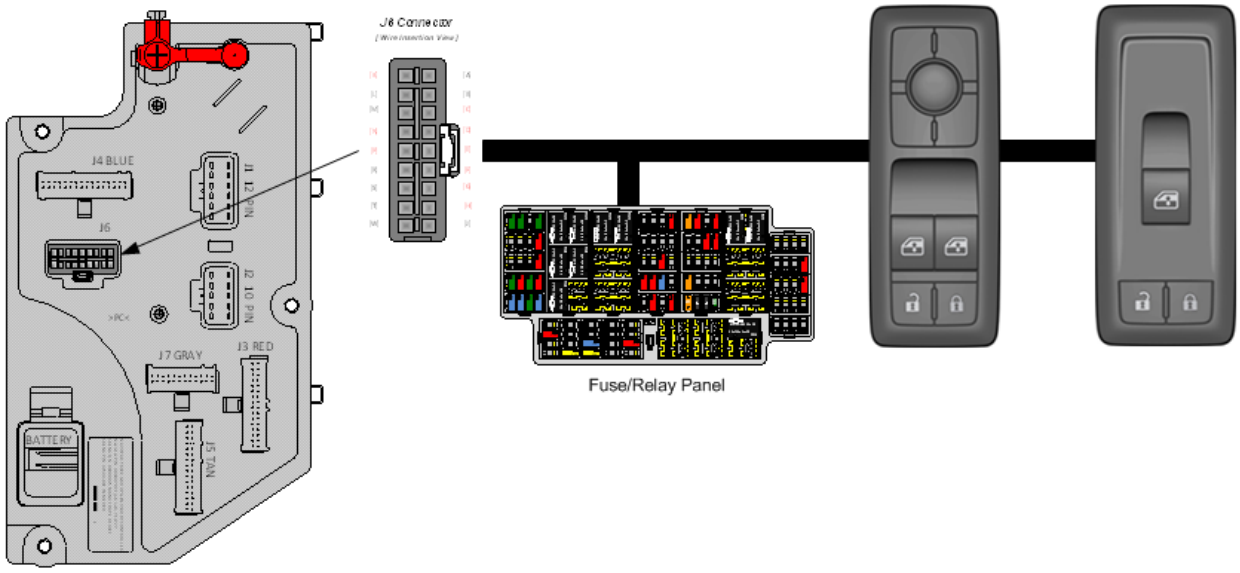

Body Controller Software Feature Codes:

- 597061 - BCM PROG, POWER WINDOW/DR LOCK 2 DOORS

Body Controller Software Feature Code Parameters:

Parameter	ID	Description	Default	Units	Min	Max	Step
AutoLock_Speed	652	Autolock speed. The speed at which the vehicle doors will lock automatically (requires power locks); Setting this parameter to zero will disable Auto Door Locks.	15	MPH	0	155	1

Parameter Definitions:

- **AutoLock_Speed** – This parameter sets the vehicle speed at which the vehicle doors will lock automatically. A value of ZERO will disable the Auto Door Lock feature.

How to Add This Feature:
Remote Keyless Entry (RKE) feature can be added if power windows/power locks (16WJU / 16WJV) are already installed on the vehicle by replacing the standard front passenger side door pod with an RKE compatible door pod.

- Software feature code 597061 must be enabled, and software feature code 597103 be enabled on the vehicle using the Diamond Logic® Builder software (see local dealer).
- Remove the existing passenger side door pod and replace it with the RKE compatible pod, part number in table [below]. The desired quantity of remote key fobs, part number in table [below], must also be ordered.
- Set the applicable programmable parameters, chirp enable, panic enable - see above, using the Diamond Logic® Builder software (see local dealer). The auto lock with default vehicle speed option should already be set since power locks are installed.

Note: If an operator unlocks the doors, while the key is on, the doors will not auto lock until the next key cycle.

- As noted above, additional wiring may be required if one or both of the Aux buttons on the key fob is to be utilized for the operation of a work light or other function/s.
- Program the RKE receiver to recognize the desired key fobs as described above.

Parts Associated with This Feature:

PART NUMBER	DESCRIPTION
4057699C3	CONTROL, ELECTRONIC, POD PASS DOOR W/RKE
4060791C1	ELECTRONIC, TRANSMITTER, RKE DOOR POD

Required Parts for Adding Remote Keyless Entry

Transmitter Learning Process:
This is the “learning” process for teaching a remote entry transmitter (“Key fob”) to a passenger door pod mounted receiver.
The learning process begins by following the idiosyncratic steps delineate below:

- Step 1 – Simultaneously depress and hold both the lock and unlock buttons located in the passenger door pod.

- Step 2 – With both the lock and unlock buttons depressed, push down and release the passenger door pod's window control switch actuator at least five times within a time interval of two seconds or less.
- Step 3 – Both lock and unlock buttons (located in the passenger door pod) can be released after completion of step 3.
- Step 4 – Depress any of the five buttons located on the RKE transmitter (Key fob).

Exiting the Transmitter "Learning" process:

- The door pod will exit the "learning" process once it enters the sleep state.
- Once the "learning" state has been successfully entered [Step 2] and there is no activity after 30-seconds the passenger door pod will automatically exit the RKE (Key fob) "learn" mode.

  Note: While the passenger door pod is in the "learning" process as many as six RKE (Key fobs) may be "learned" to that single passenger door pod device. Simply depress any of the five buttons on each RKE (Key fob) [Step 4] to "learn" it to the passenger door pod. It is also important to note that while "learning" multiple RKE (Key fobs) to a single passenger door pod device that care is taken to sequentially "learn" the RKE (Key fobs) one at a time so not to confuse the process with multiple RKE (Key fob) transmitters broadcasting differing and simultaneous IP messages to the passenger door pod device.

How to Test This Feature:

Refer to the applicable feature code using Diamond Logic® Builder programming and diagnostic software to test programmed parameter signal list.

Note: This feature uses body controller-based software controls which can be diagnosed with Navistar's Diamond Logic® Builder software (see local dealer if not owned).

References:

Refer to the applicable International® Circuit Diagrams and Service Manuals

27.4. 16WJV: WINDOW, POWER (4-Door) and Power Door Locks, Front and Rear Doors, Left and Right.

Feature Applicability to Vehicle Platforms:

- Heavy Extreme (HX) 2021 and Newer

Extended Description: Driver and passenger power windows and door locks are available as well as power window control for rear cab doors on crew cabs. The driver switches are located on the driver door trim and can control all door windows and locks. The passenger switches are located on the passenger door trim and can control the passenger door window and all locks. Rear cab window controls are located on the left and right rear doors of the cab. Window express down is available for all window switches by momentarily depressing the window down switch. The driver can “lockout” all non-driver controllable window switches by momentarily depressing the lower left switch on the driver door control.

Feature 16WJV provides driver, passenger, and rear passenger door pods for the control of power windows and locks for crew cabs with four doors.

System Block Diagram:

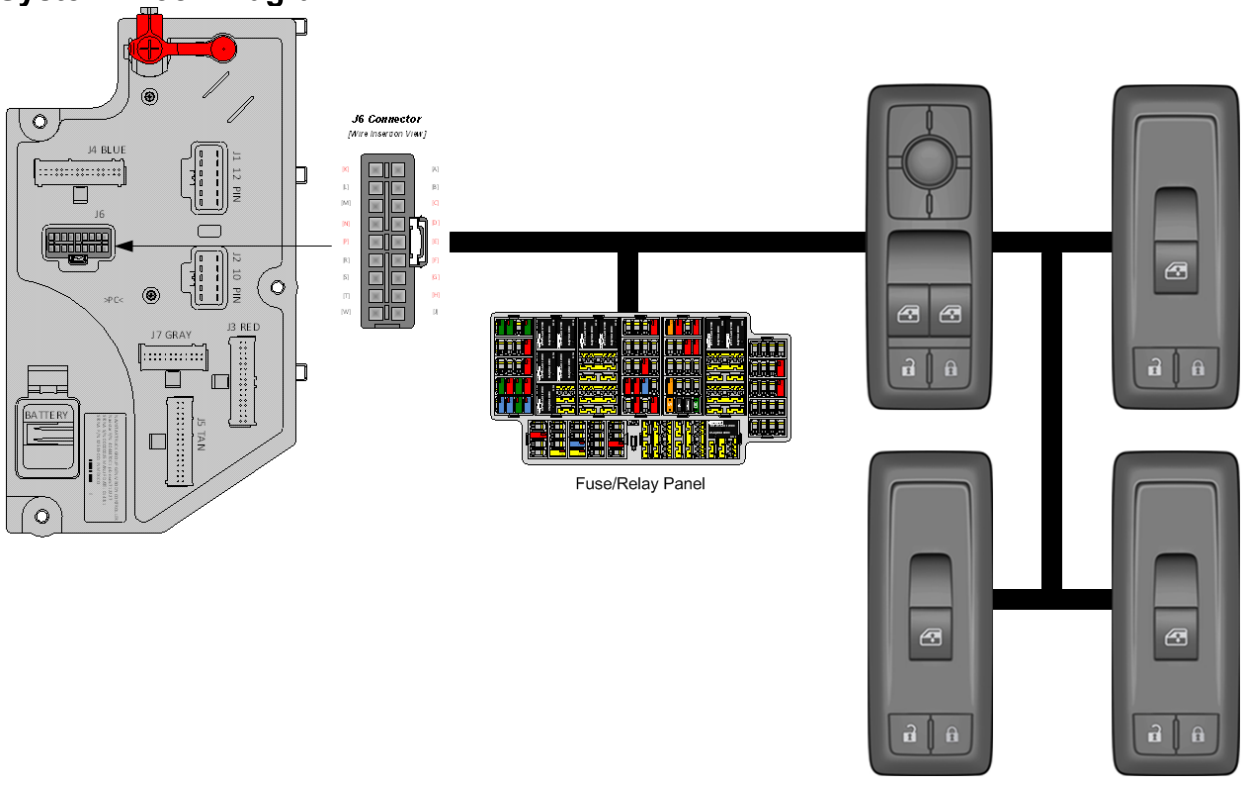

Body Controller Software Feature Codes:

- 597109 - BCM PROG, POWER WINDOW/DR LOCK 4 DOORS

Body Controller Software Feature Code Parameters:

Parameter	ID	Description	Default	Units	Min	Max	Step
AutoLock_Speed	652	Autolock speed. The speed at which the vehicle doors will lock automatically (requires power locks); Setting this parameter to zero will disable Auto Door Locks.	15	MPH	0	155	1

Parameter Definitions:

- **AutoLock_Speed** – This parameter sets the vehicle speed at which the vehicle doors will lock automatically. A value of ZERO will disable the Auto Door Lock feature.

How to Test This Feature:
Refer to the applicable feature code using Diamond Logic® Builder programming and diagnostic software to test programmed parameter signal list.

Note: This feature uses body controller-based software controls which can be diagnosed with Navistar's Diamond Logic® Builder software (see local dealer if not owned).

References:
Refer to the applicable International® Circuit Diagrams and Service Manuals

27.5. 16WKZ: KEYLESS ENTRY SYSTEM REMOTE with Panic and Auxiliary Buttons, Includes One Key Fob (Transmitter).

Feature Applicability to Vehicle Platforms:

- Heavy Extreme (HX) 2021 and Newer

Extended Description: Driver and passenger power windows and door locks are available as well as power window control for rear cab doors on crew cabs. The driver switches are located on the driver door trim and can control all door windows and locks. The passenger switches are located on the passenger door trim and can control the passenger door window and all locks. Rear cab window controls are located on the left and right rear doors of the cab. Window express down is available for all window switches by momentarily depressing the window down switch. The driver can “lockout” all non-driver controllable window switches by momentarily depressing the lower left switch on the driver door control.

Feature 16WKZ provides a key fob for remote keyless entry into the cab of the vehicle. The key fob includes buttons to lock/unlock the cab doors, a Panic alarm button to sound the city horn and an Auxiliary button that can be utilized with advanced logic programming for customer desired functionality. This feature requires 16WJU or 16WJV is also installed on the vehicle.

System Block Diagram:

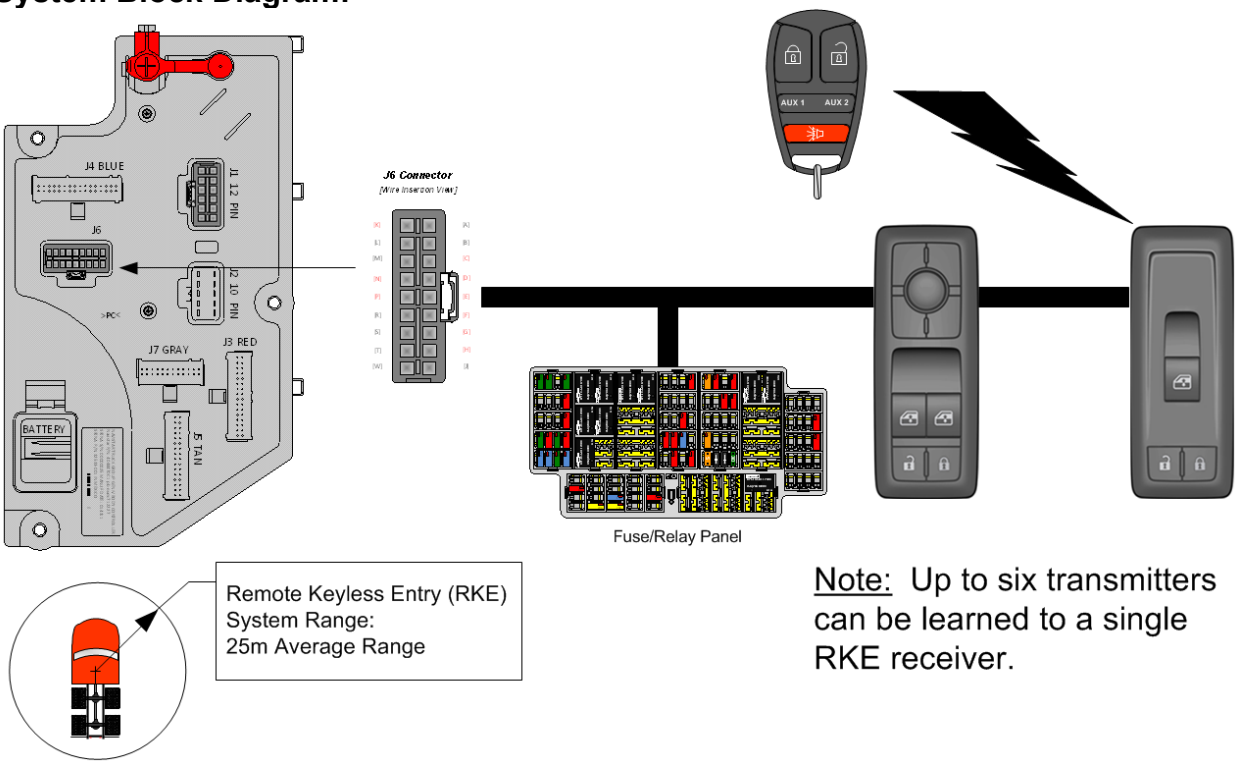

Body Controller Software Feature Codes:

- 597103 - BCM PROG, KEYLESS ENTRY REMOTE

Body Controller Software Feature Code Parameters:

Parameter	ID	Description	Default	Units	Min	Max	Step
Panic_Enable	644	Enable/disable the Panic Mode for the Keyless Remote. A value of 1 enables and a value of 0 disables the feature.	ON	No Units	N/A	N/A	N/A
Chirp_Enable	647	Enable/disable the remote lock "chirp" for Keyless Remote. A value of 1 enables and a value of 0 disables the feature.	ON	No Units	N/A	N/A	N/A

Parameter Definitions:

- **Panic_Enable** – When this parameter is set to ON. This enables the Panic Mode feature of the keyless remote. The panic function chirps the horn on/off in unison with the headlights and park lights for three minutes when the panic button on the key fob is pressed, and the IGN switch is off. If the button is pressed prior to the time out period, the lights and horn will go off.

- **Chirp_Enable** - When this parameter is set to ON. This enables the Chirp feature for the keyless remote. The chirp feature results in a “chirping” sound when the truck is locked and unlocked.

Parts Associated with This Feature:

PART NUMBER	DESCRIPTION
4057699C3	CONTROL, ELECTRONIC, POD PASS DOOR W/RKE
4060791C1	ELECTRONIC, TRANSMITTER, RKE DOOR POD

Parts Associated with Remote Keyless Entry System

Transmitter Learning Process:

This is the “learning” process for teaching a remote entry transmitter (“Key fob”) to a passenger door pod mounted receiver.

The learning process begins by following the idiosyncratic steps delineate below:

- Step 1 – Simultaneously depress and hold both the lock and unlock buttons located in the passenger door pod.
- Step 2 – With both the lock and unlock buttons depressed, push down and release the passenger door pod’s window control switch actuator at least five times within a time interval of two seconds or less.
- Step 3 – Both lock and unlock buttons (located in the passenger door pod) can be released after completion of step 3.
- Step 4 – Depress any of the five buttons located on the RKE transmitter (Key fob).

Exiting the Transmitter “Learning” process:

- The door pod will exit the “learning” process once it enters the sleep state.
- Once the “learning” state has been successfully entered [Step 2] and there is no activity after 30-seconds the passenger door pod will automatically exit the RKE (Key fob) “learn” mode.

Note: While the passenger door pod is in the “learning” process as many as six RKE (Key fobs) may be “learned” to that single passenger door pod device. Simply depress any of the five buttons on each RKE (Key fob) [Step 4] to “learn” it to the passenger door pod. It is also important to note that while “learning” multiple RKE (Key fobs) to a single passenger door pod device that care is taken to sequentially “learn” the RKE (Key fobs) one at a time so not to confuse the process with multiple RKE (Key fob) transmitters broadcasting differing and simultaneous IP messages to the passenger door pod device.

How to Test This Feature:
Refer to the applicable feature code using Diamond Logic® Builder programming and diagnostic software to test programmed parameter signal list.

Note: This feature uses body controller-based software controls which can be diagnosed with Navistar's Diamond Logic® Builder software (see local dealer if not owned).

References:
Refer to the applicable International® Circuit Diagrams and Service Manuals

28. Productivity Features

28.1. 08THN: TURN SIGNAL SWITCH with Hazard Flasher Overrides Brake, to be done With Programming System Controller.

Feature Applicability to Vehicle Platforms:

- Heavy Vocational (HV)
- Line Haul Transport (LT)
- Medium Vocational (MV)
- Regional Haul (RH)
- Heavy Extreme (HX) 2021 and Newer

Extended Description: This feature is for vehicles with combination stop and turn lamps. This feature allows hazard flashers to continue flashing when service brakes are applied. This feature is used on bulk fuel transport where some states require hazard lamps to remain flashing when stopped at R/R crossings. When the Stop Override Hazard programmable parameter is turned on, this allows hazard flashers on the rear of the vehicle to stop flashing and stay illuminated as long as the brake pedal is depressed.
This feature can be enabled or disabled by using the Diamond Logic® Builder software.

Body Controller Software Feature Codes:

- 597105 – BCM PROG, HAZARD OVERRIDE BRAKE LIGHTS
- This is an ordering code only. It is not visible in Diamond Logic Builder software.

Body Controller Software Feature Code Parameters:
There are no parameters available with 597105. There is one parameter associated with HAZARD OVERRIDE found in feature 597026.

Parameter	ID	Description	Default	Units	Min	Max
Stop_Override_Hazard_Enabled	2317	Enable/disable stoplights override hazard lights. A value of 1 enables and a value of 0 disables the feature.	0	NONE	0	1

Parameter Definitions:

- **Stop_Override_Hazard_Enabled** - Activating this parameter means that the brake lights will override the hazard lights if both are activated at the same time.

How to Add This Feature:
If it is desired to have the HAZARD lights override the STOP lights, then the Stop_Override_Hazard_Enabled parameter 2317 must be turned OFF.

How to Test This Feature:
1. Turn on the Hazard lights and verify normal operation (flashing), front and rear.

2. Depress the brake pedal and verify that both front and rear hazard lights remain flashing.
Stop Override Hazard Enabled:
1. Turn on the Hazard lights and verify normal operation, front and rear.
2. Depress the brake pedal and verify that both rear stoplights are on (not flashing) and that the front hazard lights remain flashing.
3. Release the brake pedal and verify that normal operation of the flashing hazards resumes at the rear of the vehicle.

Note: This feature uses body controller-based software controls which can be diagnosed with The International® Diamond Logic® Builder software (see local dealer if not owned).

References:
Refer to the applicable International® Circuit Diagrams and Service Manuals.

28.2. 08WXB: HEADLIGHT WARNING BUZZER Sounds When Head Light Switch is on, and Ignition Switch is in “Off” Position.

Feature Applicability to Vehicle Platforms:
- Heavy Vocational (HV)
- Line Haul Transport (LT)
- Medium Vocational (MV)
- Regional Haul (RH)
- Heavy Extreme (HX) 2021 and Newer

Extended Description: The purpose of the Headlight Warning Buzzer is to alert drivers if their headlights and/or park lights are still on when the vehicle is turned off. This feature can be enabled or disabled by using the Diamond Logic® Builder software.

Body Controller Software Feature Codes:
- 597089 – BCM PROG, HEADLIGHT REMINDER #2

Body Controller Software Feature Code Parameters:

Parameter	ID	Description	Default	Units	Min	Max	Step
Exterior_Lamp_Warn	2179	Use this parameter to enable exterior lamp reminder. A value of 1 will result in an audible warning when the vehicle is off, and the lights are on. A value of 0 is used to deactivate the audible warning.	ON	On/Off	0	1	N/A

Parameter Definitions:

- **Exterior_Lamp_Warn** - Use this parameter to enable exterior lamp reminder. A value of 1 will result in an audible warning when the vehicle is off, and the lights are on. A value of 0 is used to deactivate the audible warning.

How to Add This Feature:
Use the Diamond Logic® Builder software to install the appropriate software and determine correct settings for programmable parameters.

How to Test This Feature:
Exterior_Lamp_Warn Disabled:
1. Turn the key off.
2. Turn headlights on. There should be no warning.
Exterior_Lamp_Warn Enabled:
1. Turn the key off.
2. Turn headlights on. The warning will beep five times (with the door closed).
3. Open door. The warning will buzz continuously.

References:
Refer to the applicable International® Circuit Diagrams and Service Manuals.

28.3. 08WXD: ALARM, PARKING BRAKE Electric Horn Sounds in Repetitive Manner when Vehicle Park Brake is “NOT” Set, With Ignition (IGN) “OFF” and any Door Open.

Feature Applicability to Vehicle Platforms:
- Heavy Vocational (HV)
- Line Haul Transport (LT)
- Medium Vocational (MV)
- Regional Haul (RH)

Extended Description: The purpose of the parking brake alarm is to alert drivers if they fail to set the park brake before exiting the vehicle. For this feature to be activated, ALL the following conditions MUST occur:
• The IGN switch is in the off position.
• The parking brake is not set prior to the ignition key being turned to the “OFF” position.
• A cab door is open.
Once activated, the electric horn will sound for 60 seconds, which is the factory default setting for this.
programmable parameter. To deactivate the parking brake alarm, press on the brake pedal to immediately quiet the horn, and then make sure the IGN switch is in the run or accessory position and set the park brake.

Body Controller Software Feature Codes:

- 597057 – BCM PROG, PARK BRAKE ALARM

Body Controller Software Feature Code Parameters:

Parameter	ID	Description	Default	Units	Min	Max	Step
Park_Brake_Alarm_Duration	1951	The amount of time the horn will sound when alarm activated	60	S	0	180	1
Park_Brake_Alarm_Suspend	1952	Amount of time the alarm will suspend before brake is depressed	10	S	0	60	10
Park_Brake_Alarm_KeyOff_Enable	2457	Park brake alarm depends on Key=Off, or not	1	On/Off	0	1	1

Parameter Definitions:

- **Park_Brake_Alarm_Duration** – This parameter determines the maximum amount of time the horn will sound when the alarm is triggered. The default time is set at 60 seconds, but the range is from 0 to 180-seconds.
- **Park_Brake_Alarm_Suspend** – This parameter determines the amount of time the alarm will suspend after the brake pedal is depressed in order to allow the driver to complete the steps to deactivate the park brake alarm. The default time is set at 10 seconds, but the range is from 0 to 60-seconds.
- **Park_Brake_Alarm_KeyOff_Enable** – This parameter allows for the selection of the park brake alarm to work in either key off or key on/off.

How to Test This Feature:

The purpose of the parking brake alarm is to alert drivers if they fail to set the park brake before exiting the vehicle.

For this feature to be activated, ALL the following conditions MUST occur:

- The IGN switch is in the off position.
- The parking brake is not set.
- A cab door is open.

Once activated, the electric horn will sound for 60-seconds, which is the factory default setting for this.

programmable parameter. To deactivate the parking brake alarm, press on the brake pedal to immediately quiet the horn, and then make sure the IGN switch is in the run or accessory position and set the park brake.

References:

Refer to the applicable International® Circuit Diagrams and Service Manuals.

28.4. 16HCK: SEATBELT WARNING PREWIRE for 1 to 3 Belts.

Feature Applicability to Vehicle Platforms:

- Heavy Vocational (HV)
- Medium Vocational (MV)
- Heavy Extreme (HX) 2021 and Newer

Extended Description: This feature includes Seat Belt Switches and Seat Sensors for belted positions in the cab and a harness routed to the center of the dash for the aftermarket installation of a Data Recorder and Seat Belt Indicator System.

System Block Diagram:

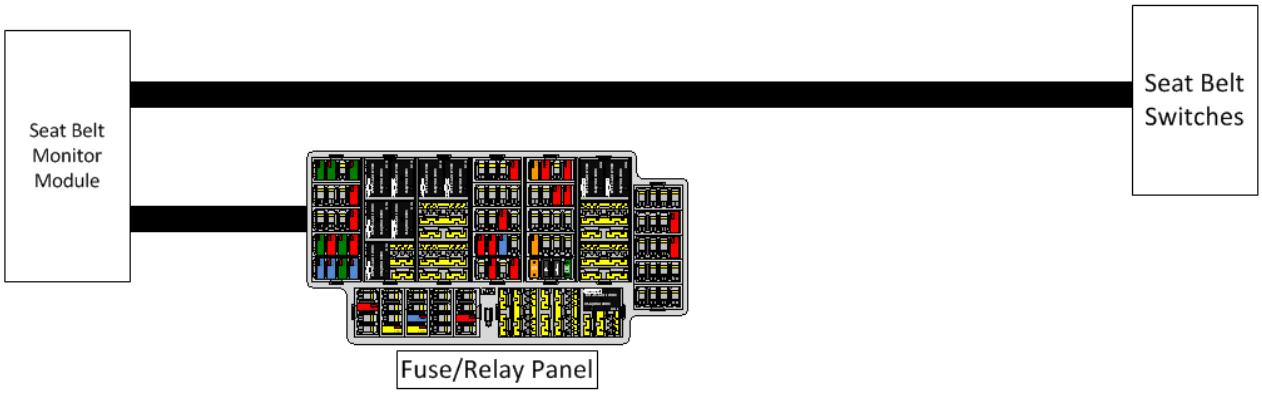

How to Test This Feature:
Refer to the chassis model circuit diagram manual for diagnostic testing functionality.

References:
Refer to the applicable International® Circuit Diagrams and Service Manuals.

28.5. 16HCL: SEATBELT WARNING PREWIRE for 4 to 6-Belts.

Feature Applicability to Vehicle Platforms:

- Heavy Vocational (HV)
- Medium Vocational (MV)
- Heavy Extreme (HX) 2021 and Newer

Extended Description: This feature includes Seat Belt Switches and Seat Sensors for belted positions in the cab and a harness routed to the center of the dash for the aftermarket installation of a Data Recorder and Seat Belt Indicator System.

System Block Diagram:

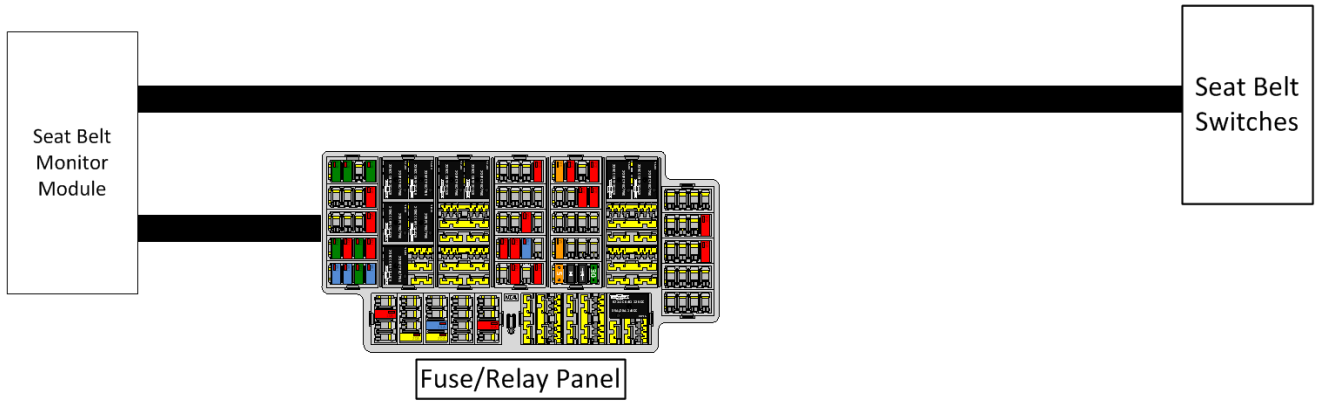

References:
Refer to the applicable International® Circuit Diagrams and Service Manuals.

29. Remote Start/Stop Features

29.1. 08XRX: ENGINE SHUTDOWN CUSTOMER INSTALL SWITCH.

Feature Applicability to Vehicle Platforms:

- Heavy Extreme (HX) 2021 and Newer

Extended Description: The engine shutdown customer install switch feature provides the operator with the ability to remotely stop the engine from a single ground (GND) active switch closure located on the vehicle body equipment. The vehicle park brake must be set, and the hood of the vehicle must be closed. The vehicle must also be in neutral. This feature requires the customer to provide the GND active switch as well as the wiring from that switch to the F8 connector on connector 1602 of the BCM. A ground must also be present on 1606 pin M to identify that the transmission is in neutral.

System Block Diagram:

Feature 08XRX
Engine Shutdown

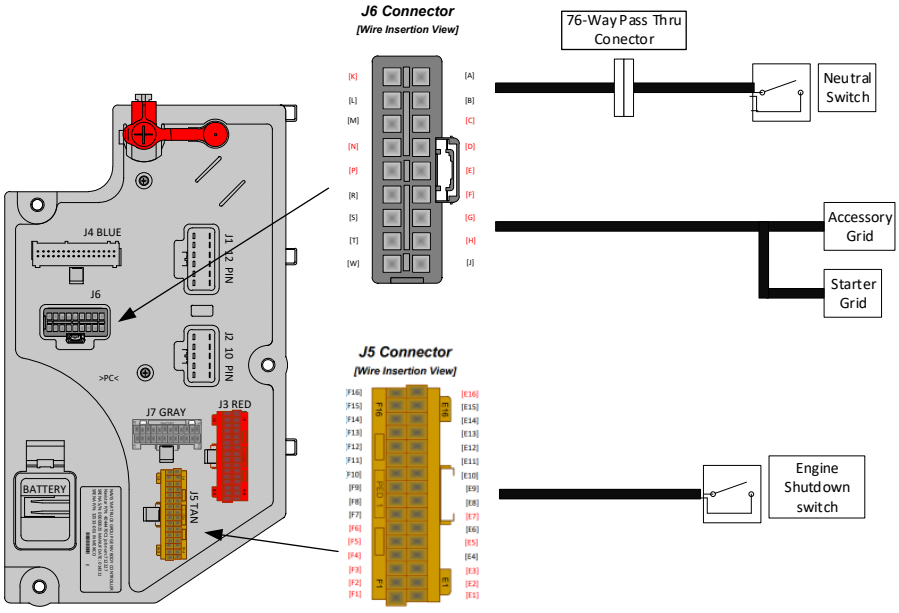

Body Controller Software Feature Codes:

- 597856 – Engine Shutdown With Customer Switch

Note/s About Possible Software Feature Conflicts:

597186 – BCM PROG, REMOTE START/STOP without Emergency Pump Motor Functionality

597187 – BCM PROG, REMOTE START/STOP without Emergency Pump Motor Functionality.

Parts Associated with This Feature:

PART NUMBER	DESCRIPTION
REMOTE STOP/START (BODY BUILDER HARNESS CONNECTOR PARTS)	
0587568C91	2-WAY CONNECTOR BODY (DELPHI WEATHERPACK SEALED 2.6MM FEM 2W 20 AMPS)
1673747C1	WIRE TERMINAL 16-GAUGE (DELPHI WEATHERPACK 2.6MM MALE 12 AWG)
0587575C1	WIRE TERMINAL 16-GAUGE (DELPHI WEATHERPACK 2.6MM MALE 16-14 AWG)
0589391C1	WIRE TERMINAL 12-GUAGE (DELPHI BLUE 1W CAVITY SEAL PN:15324996)
1667735C1	WIRE TERMINAL 16-GUAGE (DELPHI BLUE 1W CAVITY SEAL PN:15324996)
76-WAY CONNECTOR (THERMAL PROTECTION BARRIER PASS THROUGH)	
3574285C1	76-WAY CONNECTOR WIRE TERMINAL FEMALE 14-GUAGE
3574288C1	76-WAY CONNECTOR WIRE TERMINAL FEMALE 16-GUAGE
2003343C1	76-WAY CONNECTOR WIRE TERMINAL FEMALE 18-GUAGE
3549416C1	76-WAY CONNECTOR WIRE TERMINAL MALE 14-GUAGE
3549417C1	76-WAY CONNECTOR WIRE TERMINAL MALE 16-GUAGE
35494118C1	76-WAY CONNECTOR WIRE TERMINAL MALE 18-GUAGE
32-WAY CONNECTOR BODY CONTROL MODULE J4/J5 CONNECTOR PARTS	
3522073C1	32-WAY BODY CONTROLLER J4/J5 (1601/1602) CONNECTOR WIRE TERMINAL 18/20-GAUGE
3534303C1	32-WAY BODY CONTROLLER J4/J5 (1601/1602) CONNECTOR WIRE TERMINAL 20/22-GAUGE
24-WAY CONNECTOR BODY CONTROL MODULE J7 CONNECTOR PARTS	
3710061C1	GAUGE CLUSTER 24-WAY J7 CONNECTOR
3539892C1	LOCK #1 24-WAY J7 CONNECTOR
3539893C1	LOCK #2 24-WAY J7 CONNECTOR
3522073C1	WIRE TERMINAL J7 18-20 GAUGE
3534303C1	WIRE TERMINAL J7 20-22 GAUGE

Parts Associated with Engine Shutdown Feature

How to Test This Feature:
1. When attempting to stop the running engine, the transmission must be in Neutral and a ground must be applied to J6 pin M.
2. The body builder switch must provide a GND signal to J5 pin F8. Closing the body builder-supplied switch will stop the engine.

Note: This feature uses body controller-based software controls which can be diagnosed with Navistar's Diamond Logic® Builder software (see local dealer if not owned).

References:
Refer to the applicable International® Circuit Diagrams and Service Manuals

29.2. 60ABC: BDY INTG, REMOTE START/STOP to Start and Stop Vehicle Engine.

Feature Applicability to Vehicle Platforms:

- Medium Vocational (MV)
- Heavy Vocational (HV)
- Heavy Extreme (HX) 2021 and Newer

Extended Description: The Remote Start/Stop feature provides the operator with the ability to remotely start or stop the engine from a single ground (GND) active switch closure located on the vehicle body equipment. The vehicle park brake must be set, and the hood of the vehicle must be closed. The vehicle must also be equipped with an automatic transmission and must be in neutral. This feature requires the customer to provide the GND active switch as well as the wiring from that switch into the Remote Start/Stop connector located in the middle of the chassis. The customer will also provide the terminals and seals for the International®-provided connector.

System Block Diagram:

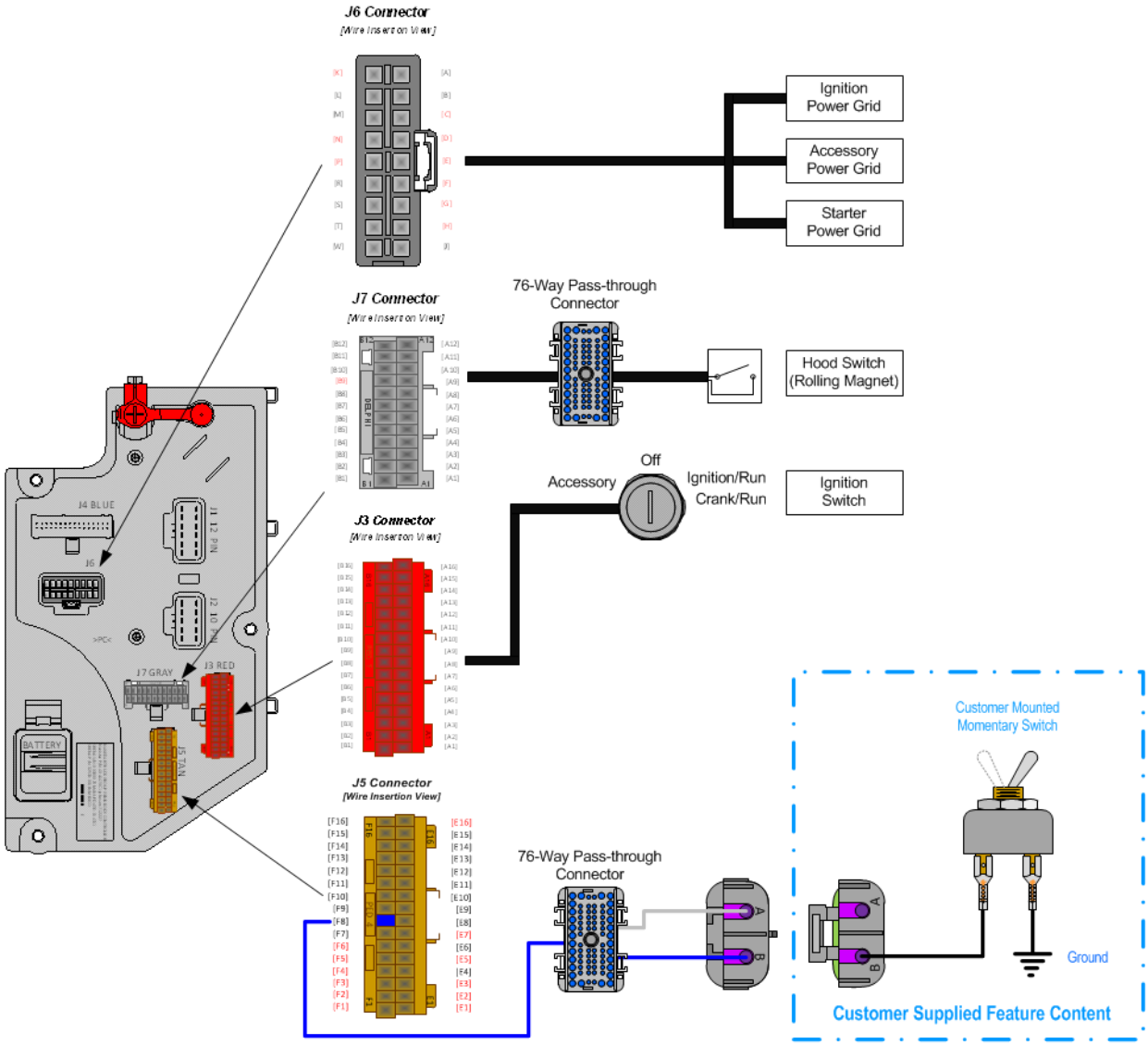

Body Controller Software Feature Codes:

- 597187 - BCM PROG, REMOTE START/STOP without Emergency Pump Motor Functionality
- 597069 - BCM PROG, HOOD SWITCH

Body Controller Software Feature Code Parameters:

Parameter	ID	Description	Default	Units	Min	Max	Step
TEM_Rem_Start_Stop_PTO_Ilock	2192	If this parameter is set, the remote start/stop functionality will not function unless the PTO switch is in the on position.	OFF	No/Off	N/A	N/A	N/A

Parameter Definitions:

- **TEM_Rem_Start_Stop_PTO_Ilock** – When this parameter is set to ON. Then the operator can only use Remote Start/Stop when the in-cab, International® PTO switch is in the ON position. The PTO must be a 597-feature driven switch.

Note/s About Possible Software Feature Conflicts: 597186

Parts Associated with This Feature:

PART NUMBER	DESCRIPTION
REMOTE STOP/START (CHASSIS HARNESS CONNECTOR PARTS)	
0587567C91	2-WAY CONNECTOR BODY
1673748C1	WIRE TERMINAL 12-GAUGE
0587577C1	WIRE TERMINAL 14/16-GAUGE
0589391C1	WIRE TERMINAL SEAL 12-GAUGE
1667735C1	WIRE TERMINAL SEAL 14/16-GAUGE
REMOTE STOP/START (BODY BUILDER HARNESS CONNECTOR PARTS)	
0587568C91	2-WAY CONNECTOR BODY (DELPHI WEATHERPACK SEALED 2.6MM FEM 2W 20 AMPS)
1673747C1	WIRE TERMINAL 16-GAUGE (DELPHI WEATHERPACK 2.6MM MALE 12 AWG)
0587575C1	WIRE TERMINAL 16-GAUGE (DELPHI WEATHERPACK 2.6MM MALE 16-14 AWG)
0589391C1	WIRE TERMINAL 12-GUAGE (DELPHI BLUE 1W CAVITY SEAL PN:15324996)
1667735C1	WIRE TERMINAL 16-GUAGE (DELPHI BLUE 1W CAVITY SEAL PN:15324996)
76-WAY CONNECTOR (THERMAL PROTECTION BARRIER PASS THROUGH)	
3574285C1	76-WAY CONNECTOR WIRE TERMINAL FEMALE 14-GUAGE
3574288C1	76-WAY CONNECTOR WIRE TERMINAL FEMALE 16-GUAGE
2003343C1	76-WAY CONNECTOR WIRE TERMINAL FEMALE 18-GUAGE
3549416C1	76-WAY CONNECTOR WIRE TERMINAL MALE 14-GUAGE
3549417C1	76-WAY CONNECTOR WIRE TERMINAL MALE 16-GUAGE
35494118C1	76-WAY CONNECTOR WIRE TERMINAL MALE 18-GUAGE
BODY CONTROL MODULE J5 CONNECTOR PARTS	
3522073C1	32-WAY BODY CONTROLLER J5 (1601/1602) CONNECTOR WIRE TERMINAL 18/20-GAUGE
3534303C1	32-WAY BODY CONTROLLER J5 (1601/1602) CONNECTOR WIRE TERMINAL 20/22-GAUGE

Parts Associated with Remote Stop/Start Feature

How to Test This Feature:
1. When starting and stopping the engine, make sure that the Body Builder switch is providing a GND signal to the mid-chassis wire. The vehicle (IGN) key must be in the ON position and the hood must be closed.
2. If the engine is running, a momentary switch closure of the body builder-supplied switch will stop the
engine. If the engine is stopped, push and hold the body builder-supplied switch until the vehicle starts.

Note: This feature uses body controller-based software controls which can be diagnosed with Navistar's Diamond Logic® Builder software (see local dealer if not owned).

References:
Refer to the applicable International® Circuit Diagrams and Service Manuals

29.3. 60ABD: BDY INTG, REMOTE START/STOP To Start and Stop Vehicle Engine, Will Start Emergency Pump Motor, Programmable Time Intervals.

Feature Applicability to Vehicle Platforms:

- Medium Vocational (MV)
- Heavy Vocational (HV)
- Heavy Extreme (HX) 2021 and Newer

Extended Description: The Remote Start/Stop feature provides the ability to remotely start or stop the engine from a single GND active switch closure located on the vehicle body equipment. This feature operates in two modes, namely the remote start/stop mode and the emergency pump mode. The vehicle park brake must be set, and the hood of the vehicle must be closed. The vehicle must also be equipped with an automatic transmission and must be in neutral. The user may engage the same switch to control an emergency pump solenoid/motor combination if the vehicle engine cannot be restarted.

System Block Diagram:

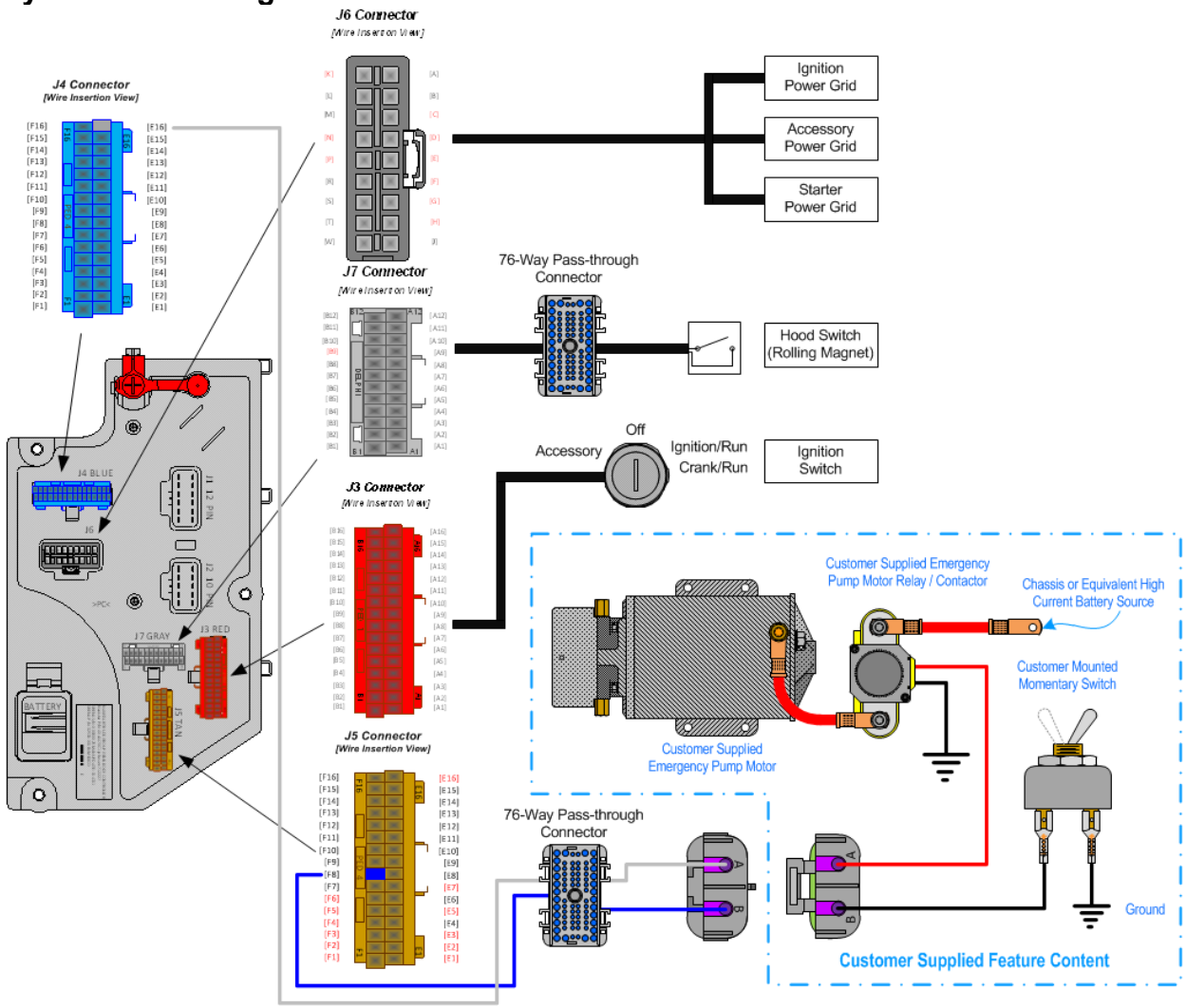

Body Controller Software Feature Codes:

597856 – Engine Shutdown With Customer Switch **Body Controller Software Feature Codes:**

- 597186 - BCM PROG, REMOTE START/STOP with Emergency Pump Motor Functionality
- 597069 - BCM PROG, HOOD SWITCH

Body Controller Software Feature Code Parameters:

Parameter	ID	Description	Default	Units	Min	Max	Step
TEM_Remote_ Engine_Stop_ Time	2072	Time allotted to stop the engine for the remote engine start stop with emergency pump feature.	5	S	-	60	0.01

TEM_Rem_Start_Stop_PTO_Ilock	2192	If this parameter is set, the remote start/stop functionality will not function unless the PTO switch is in the on position.	OFF	No/Off	N/A	N/A	N/A

Parameter Definitions:

- **TEM_Rem_Start_Stop_PTO_Ilock** – When this parameter is set to ON. Then the operator can only use Remote Start/Stop when the in-cab, International® PTO switch is in the ON position. The PTO must be a 597-feature driven switch.
- **TEM_Rem_Start_Stop_PTO_Ilock** – When this parameter is set to ON. Then the operator can only use Remote Start/Stop when the in-cab, International® PTO switch is in the ON position. The PTO must be a 597-feature driven switch.

Note/s About Possible Software Feature Conflicts: 597187

Parts Associated with This Feature:

PART NUMBER	DESCRIPTION
REMOTE STOP/START (CHASSIS HARNESS CONNECTOR PARTS)	
0587567C91	2-WAY CONNECTOR BODY
1673748C1	WIRE TERMINAL 12-GAUGE
0587577C1	WIRE TERMINAL 14/16-GAUGE
0589391C1	WIRE TERMINAL SEAL 12-GAUGE
1667735C1	WIRE TERMINAL SEAL 14/16-GAUGE
REMOTE STOP/START (BODY BUILDER HARNESS CONNECTOR PARTS)	
0587568C91	2-WAY CONNECTOR BODY (DELPHI WEATHERPACK SEALED 2.6MM FEM 2W 20 AMPS)
1673747C1	WIRE TERMINAL 16-GAUGE (DELPHI WEATHERPACK 2.6MM MALE 12 AWG)
0587575C1	WIRE TERMINAL 16-GAUGE (DELPHI WEATHERPACK 2.6MM MALE 16-14 AWG)
0589391C1	WIRE TERMINAL 12-GUAGE (DELPHI BLUE 1W CAVITY SEAL PN:15324996)
1667735C1	WIRE TERMINAL 16-GUAGE (DELPHI BLUE 1W CAVITY SEAL PN:15324996)
76-WAY CONNECTOR (THERMAL PROTECTION BARRIER PASS THROUGH)	
3574285C1	76-WAY CONNECTOR WIRE TERMINAL FEMALE 14-GUAGE
3574288C1	76-WAY CONNECTOR WIRE TERMINAL FEMALE 16-GUAGE
2003343C1	76-WAY CONNECTOR WIRE TERMINAL FEMALE 18-GUAGE
3549416C1	76-WAY CONNECTOR WIRE TERMINAL MALE 14-GUAGE
3549417C1	76-WAY CONNECTOR WIRE TERMINAL MALE 16-GUAGE
35494118C1	76-WAY CONNECTOR WIRE TERMINAL MALE 18-GUAGE
BODY CONTROL MODULE J5 CONNECTOR PARTS	
3522073C1	32-WAY BODY CONTROLLER J5 (1601/1602) CONNECTOR WIRE TERMINAL 18/20-GAUGE
3534303C1	32-WAY BODY CONTROLLER J5 (1601/1602) CONNECTOR WIRE TERMINAL 20/22-GAUGE

Parts Associated with Remote Stop/Start Feature

How to Test This Feature:
1. When stopping the engine, make sure that the Body Builder switch is providing a GND signal to the BCM. The vehicle IGN key must be in the ON position.
2. With the engine running, closing the body builder-supplied switch will stop the engine.

Note: This feature uses body controller-based software controls which can be diagnosed with Navistar's Diamond Logic® Builder software (see local dealer if not owned).

References:
Refer to the applicable International® Circuit Diagrams and Service Manuals

30. Secondary Road Speed Limit

30.1. Datalink Control for Secondary Road Speed Limit Control: J1939 DATALINK ENGINE CONTROL for Navistar A26 Engines.

Feature Applicability to Vehicle Platforms:

- Heavy Extreme (HX) 2021 and Newer

Extended Description:

Physical Description: The implementation of the system consists of Body Control Module (BCM), Engine Control Module (ECM) and an optional body builder installed proximity sensor. The sensor is hardwired to BCM connector J5 (1602) pin F-11.

This feature is for use on vehicles with the following accessories:

- Snow plow
- Salt spreader
- Hi-rail
- Street sweeper
- Dump body
- Line painter
- X-ray unit

Functional Description: The Secondary Road Speed Limit is a customer requested feature that uses an optional proximity sensor or Advanced Logic signal to limit vehicle speed to a Programable Parameter (PP) setting when plow, buckets, bins, etc. are opened, lowered, or activated.

The Secondary Road Speed Limit feature limits vehicle speed to a set value. The feature is triggered by the state change of the proximity sensor or Advanced Logic signal input to the BCM. When the BCM detects the state change and the Interlock conditions are met, the BCM transmits the sensor status via SPN 1653 to ECM.

The ECM controls secondary Road Speed limit activation, when the BCM provided input is active and Secondary Road Speed Limit Enable (79310) is Enabled. The ECM will deactivate engine throttling until vehicle speed is below the Secondary Road Speed Limit (79330) set speed (24.85 - 74.56 mph).

If applicable, the body builder who installs the accessory (dump bed, snow plow, etc.) will customize the sensor error reactions.

Instructions: The implementation of the datalink control function for secondary road speed limit requires the following:

- Customer mounted proximity sensor sending ground to BCM connector J5 (1602) pin F-11 when plow, dump, etc. is active, or a Diamond Logic Builder (DLB) Advanced Logic signal.
- BCM software feature 0597525 enabled using DLB software.
- ECM programmable parameters ID (PPID) must be appropriately set, in accordance with the customer's requirements, using Navistar Electronic Service Tool. See "Engine Control Module PPID table" below for applicable settings.

System Block Diagram:

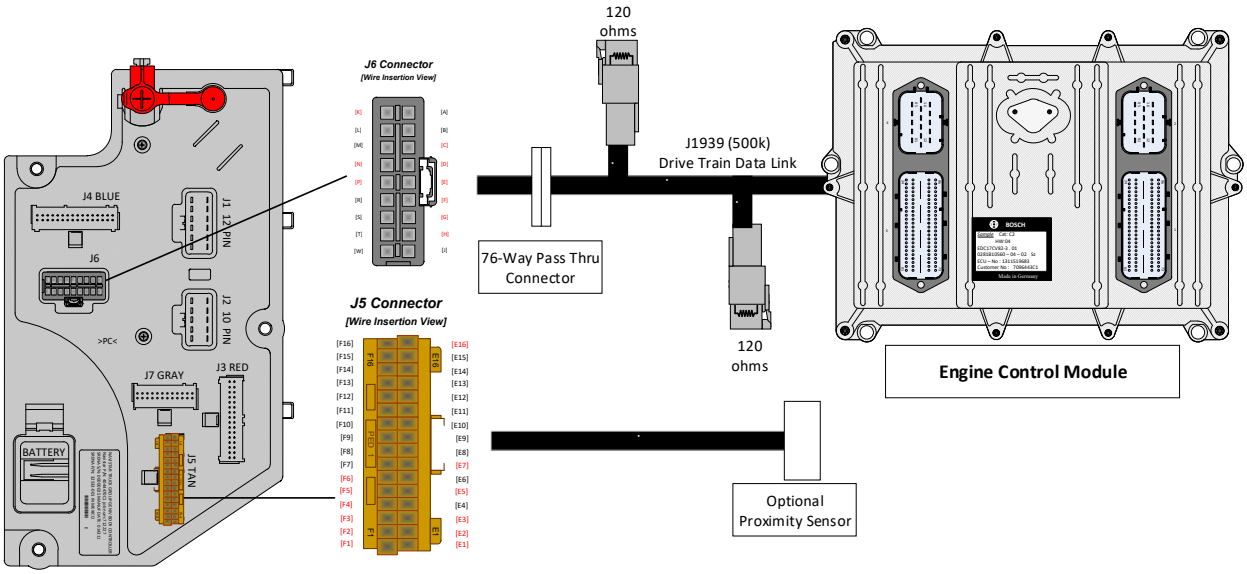

BCM Software Feature Code:

- 0597525 - BCM PROG, SEC ROAD SPEED LIMIT A26

This feature code enables BCM communication of the following CAN messages:

- *Send Vehicle_Limiting_Speed_Governor_Enable_Switch – PGN 57344 SPN 1653*

Engine Control Module PPID Table

ECM Secondary Road Speed Limit Software Programmable Parameter Identification (PPID):

PPID	Description	Recommended Value
79310	Secondary Road Speed Limit Enable	As desired by the customer
79330	Secondary Road Speed Limit	Customer Chosen

How to Test This Feature

- Verify software feature 0597525 is enabled in DLB software.
- Verify ECM PPIDs are set correctly.
- Depending on BCM input configured, verify one of the following:
  - Proximity sensor is pinned correctly to BCM connector J5 (1602) pin F-11 and sensor wires are not open or short to ground.
  - Advanced logic signal is programed correctly as BCM input.
- Road test vehicle with installed accessory in active and inactive states to verify vehicle speed is properly limited.

31. Standard electrical Offerings

31.1. 08WRB: HEADLIGHTS ON W/WIPERS Headlights Will Automatically Turn on if Windshield Wipers are turned on. There are two functions, Lights on With Wipers (LOWW) and Day Time Running Lights (DTRL), available with this sales code.

Feature Applicability to Vehicle Platforms:

- Heavy Extreme (HX) 2021 and Newer

Extended Description: Function (LOWW): The Lights On with Wipers (LOWW) function turns on the low beam headlights (tail, marker & clearance lights are also turned on with low beam headlights) whenever the windshield wipers are ON steady or intermittent. The headlights will not be enabled in washer mode. When the wipers are turned OFF, headlights will remain ON until the key is turned OFF or the headlight switch is cycled from OFF to ON to OFF. This feature may be enabled or disabled by using Diamond Logic® Builder programming software.

Body Controller Software Feature Codes:

- 597079 – BCM PROG, HEADLIGHT ON W/WIPERS

How to Test This Feature:
1. Connect Diamond Logic Builder software to the vehicle to check the parameter box for Lights_on_with_Wipers and program the Body Controller.
2. Turn on the wipers (Steady or Intermittent) and verify that the low beam headlights, tail, marker and/or
clearance lights are turned on.
3. Turn off the wipers and verify that the above lights are OFF.

Note: This feature uses body controller-based software controls which can be diagnosed with Navistar's Diamond Logic® Builder software (see local dealer if not owned).

References:
Refer to the applicable International® Circuit Diagrams and Service Manuals

32. Theft Deterrent

32.1. 60ACX: BODY INTG, THEFT DETERRENT SYS Includes one (1) Switch Pack of Six Switches.

Feature Applicability to Vehicle Platforms:

- Heavy Vocational (HV)
- Line Haul Transport (LT)
- Medium Vocational (MV)
- Regional Haul (RH)
- Heavy Extreme (HX) 2021 and Newer

Extended Description: The International® Theft Deterrent system provides a means to help control the mobility of a vehicle. Once the vehicle has been started, the driver is required to enter a pre-programmed code (theft deterrent code). The theft deterrent code must also be entered when driving is resumed after the vehicle is at idle with the park brake set. The theft deterrent feature is effective in preventing a vehicle from being driven by unauthorized individuals.

THEFT DETERRENT CODE
The theft deterrent code is any combination of one to eight digits (between 1 and 99999999) selected by the customer. The Theft Deterrent system will come from the factory disabled. The dealer will be responsible for enabling the system and programming the desired theft deterrent code during the regular dealer Pre-Delivery Inspection (PDI). This is not included in the normal PDI reimbursement and is not a warranty expense.

THEFT DETERRENT SWITCHES
Six switches located in the Instrument Panel (IP) provide the functions of the Theft Deterrent system. Five of the switches are dual digit switches (3-position, center stable momentary switches) numbered 0 to 9. The remaining switch is the ENGINE STOP/CLEAR ENTRY switch, which is a combination switch indicator and a standard momentary switch (see the illustration below).



The red ENGINE STOP indicator of the ENGINE STOP/CLEAR ENTRY switch flashes to alert the driver that the theft deterrent code must be entered (within the pre-programmed time delay or the engine will shut down). The momentary CLEAR ENTRY

position is pressed whenever the driver needs to clear a failed code so that the correct code can be re-entered.

Note: If the operator enters the wrong security code, the vehicle must be stopped, and the park brake must be set/engaged before the system will clear the previous theft deterrent code entry.

System Block Diagram:

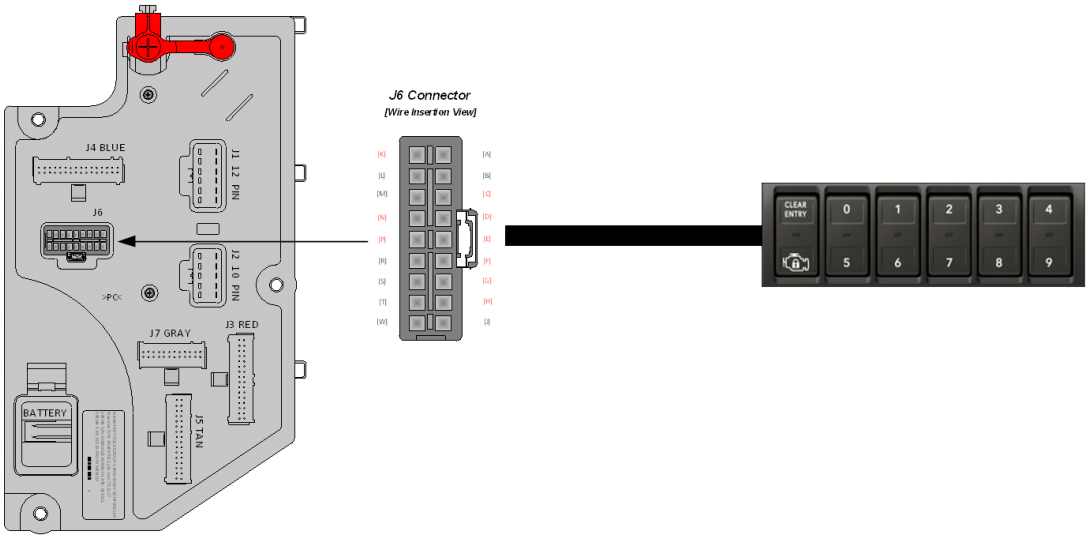

Body Controller Software Feature Codes:

- 597106 - BCM PROG, THEFT DETERRENT SYS

Body Controller Software Feature Code Parameters:

Parameter	ID	Description	Default	Units	Min	Max	Step
Anti_Theft_Enable	2222	Enables and disables the anti-theft feature	0	ON / OFF	0	1	1
Anti_Theft_Code_Master_Lo	2224	The lower word of the code	2345	No Units	0	9999	1
Anti_Theft_Code_Master_Hi	2226	The upper word of the code	0001	No Units	0	9999	1
Anti_Theft_Active_Min	2227	The minimum amount of time the truck is disabled once it enters shutdown mode.	10	seconds	10	60	1
Anti_Theft_Warning_Time	2245	The amount of time after the park brake has been released or the vehicle starts moving until the vehicle enters shutdown mode	10	seconds	1	655	1
Anti_Theft_Code_Length	2257	The number representing the code length in terms of number of digits	5	No Units	1	8	1
Anti_Theft_Ignore_Park_Brake	3200	When this parameter is True, Anti-Theft features do not reset the Access Code each time the Park Brake is set.	0	ON / OFF	0	1	1

Parameter Definitions:

- **Anti_Theft_Enable** – Parameter to enable or disable the theft deterrent feature.
- **Anti_Theft_Code_Master_Lo** – Lower 4 digits of the numerical theft deterrent code to be entered by the driver.
- **Anti_Theft_Code_Master_Hi** – Upper 4 digits of the numerical theft deterrent code to be entered by the driver.
- **Anti_Theft_Active_Min** – Length of time the engine is shut down.
- **Anti_Theft_Warning_Time** – The amount of time after the park brake has been released or the vehicle starts moving until the vehicle enters shutdown mode
- **Anti_Theft_Code_Length** – Number of digits in the theft deterrent code
- **Anti_Theft_Ignore_Park_Brake** – When this parameter is True, Anti-Theft features do not reset the Access Code each time the Park Brake is set.

Parts Associated with This Feature:

PART NUMBER	DESCRIPTION
4057689C4	HOUSING, SWITCH, 6 PACK DIN MULTIPLEX
3766110C1	SWITCH, ELECTRONIC, ENGINE STOP/CLEAR
3766111C1	SWITCH, ELECTRONIC, THEFT DETERRENT, 0/5
3766112C1	SWITCH, ELECTRONIC, THEFT DETERRENT, 1/6
3766113C1	SWITCH, ELECTRONIC, THEFT DETERRENT, 2/7
3766114C1	SWITCH, ELECTRONIC, THEFT DETERRENT, 3/8
3766115C1	SWITCH, ELECTRONIC, THEFT DETERRENT, 4/9

Parts Associated with Theft Deterrent Feature

How to Test This Feature:

The correct engine start and theft deterrent code entry sequence is as follows:

1. Driver starts vehicle with park brake set.
2. The driver enters the code programmed by the dealer by pressing the switch positions for that code (read from left to right). For example, if the code is 54321, the driver should press switch positions 54321 in that order.

If an error is made while entering the code, the driver presses the CLEAR ENTRY position of ENGINE
STOP/CLEAR ENTRY switch and enters the correct code. The park brake must be set for clearing the incorrect code.

3. When the correct code is entered, the gauge cluster alarm will sound one short beep and, at the same time, the ENGINE STOP indicator will flash once. If the wrong code is entered, the gauge cluster will sound one long beep, and the ENGINE STOP indicator will be illuminated for approximately 1.5 seconds.
4. Park brake is released.
5. Vehicle may be driven without interruption.

Note: This feature uses body controller-based software controls which can be diagnosed with Navistar's Diamond Logic® Builder software (see local dealer if not owned).

References:
Refer to the applicable International® Circuit Diagrams and Service Manuals

33. PTO (Power Take OFF) and PTO Hour Meter (Not T14 Transmission)

33.1. 13TLR: PTO, SPLIT SHAFT {NAMCO Model 463-A-SPSSXS-Y-362} Power Tower Above Rail Provides a Power Source for Customer Equipment, PTO Ratio 1:1 w/Driveline; Upper Front PTO Output Decouplable; Upper Rear PTO Output Non-Decouplable; Case Hardened Helical Gears; Lube Pump, Requires Customer Mounted External Cooler System 509 BTU/Min Minimum Capacity

Feature Applicability to Vehicle Platforms:

- Heavy Extreme (HX) 2021 and Newer

Extended Description: This feature provides the customer with the ability to control the customer-supplied Split Shaft PTO with an in-dash switch and two air solenoids. This feature provides all the software and wiring to the air solenoids located inside the driver's side frame rail next to the transmission. Customers must supply and route air plumbing to the transfer case. Programmable parameters allow customers to customize the functionality of this feature.

System Block Diagram:

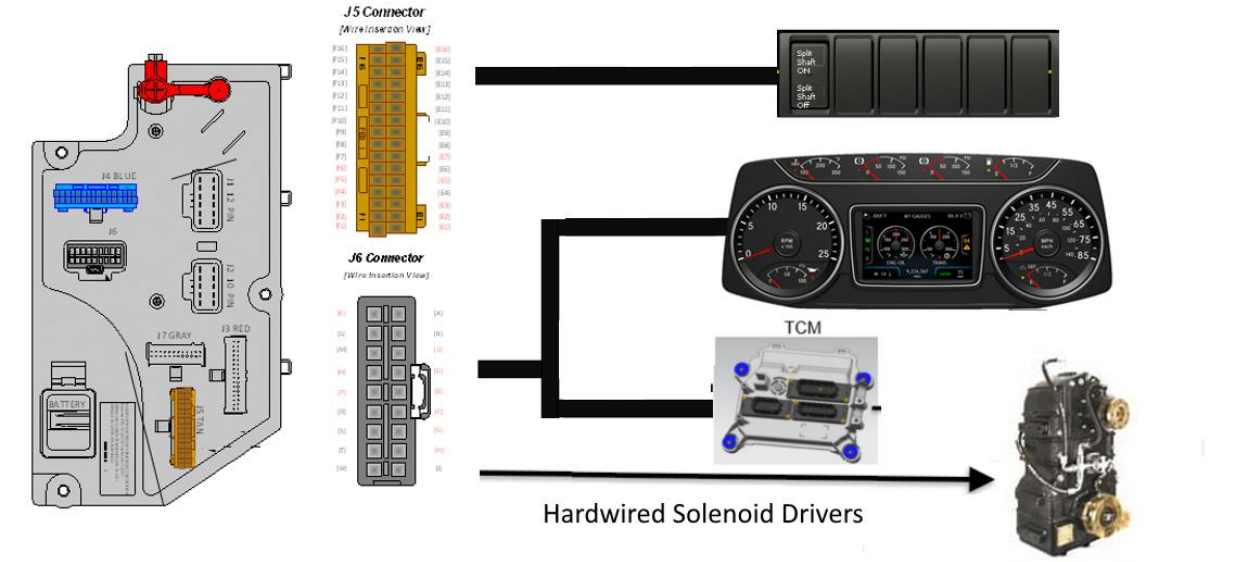

Body Controller Software Feature Codes:

- 597514 - BCM PROG, PTO SPLIT SHAFT NAMCO With International Engines
- 597515 - BCM PROG, PTO SPLIT SHAFT NAMCO With Cummins Engine

Select | Advanced Logic | Features | Faults | Connectors | Signals | Center Panel | Cluster | Campaign | Messages

ESC Signals | Custom | Master List | J1939 | Detected J1939 | Watched | Graph

Session: 0597514

Signal	Pins	Signal Type	Physical Signal	Description
Drive_Mode_Solenoid_Cmd	1601-E9	Relay Driver Output	P_SSC_RD16	Drive Mode Solenoid Command
PTO_Mode_Solenoid_Cmd	1601-F5	Relay Driver Output	P_SSC_RD22	PTO Mode Solenoid Command
P_DIN_DIN28	1606-L	Digital Input	P_DIN_DIN28	ESC II - Booster Pump Monitor Input
Rear_Axle_Status	1606-L	Digital Input	P_DIN_DIN28	Rear Axle Sensor of the transfer case to BCM as Engaged or Disengaged
P_DIN_DIN31	1607-A1	Digital Input	P_DIN_DIN31	Manually Generated Physical Signal
PTO_Status	1607-A1	Digital Input	P_DIN_DIN31	PTO Status to know Engagement or Disengagement
Aux_Output_Status	1607-A2	Digital Input	P_DIN_DIN32	Aux output Status for Engagement or Disengagement
P_DIN_DIN32	1607-A2	Digital Input	P_DIN_DIN32	Manually Generated Physical Signal
Split_Shaft_PTO_Switch		J1939 Input	P_J1939IN_152_61184_...	This switch signal will be set when switch is pressed at Top position.
Transfer_Case_Aux_Equip_Engaged		J1939 Output	P_J1939OUT_33_61448_...	Signal sent to the engine indicating the state of the transfer case fee...
Split_Shaft_PTO_Switch_Ind_Color		J1939 Output	P_J1939OUT_33_61184_...	This switch indicator color signal is used as switch telltale for Split...
Split_Shaft_PTO_Switch_Ind_Cmd		J1939 Output	P_J1939OUT_33_61184_...	This switch indicator signal is used as switch telltale for Split Shaft...
Transfer_Case_Failsafe_Flag				Internal signal for Transfer Case PTO failsafe conditions
Xfer_Case_PTO_Engage_Error_Timer				Internal timer for Transfer Case PTO Engage Error fault condition
Vehicle_Speed				Wheel-based vehicle speed broadcasted from engine every 100ms Scale is ...

Select | Advanced Logic | Features | Faults | Connectors | Signals | Center Panel | Cluster | Campaign | Messages

ESC Signals | Custom | Master List | J1939 | Detected J1939 | Watched | Graph

Session: 0597515

Signal	Pins	Signal Type	Physical Signal	Description
Drive_Mode_Solenoid_Cmd	1601-E9	Relay Driver Output	P_SSC_RD16	Drive Mode Solenoid Command
PTO_Mode_Solenoid_Cmd	1601-F5	Relay Driver Output	P_SSC_RD22	PTO Mode Solenoid Command
P_DOUT_1A1	1602-E13	Digital Output	P_DOUT_1A1	Hyperion Generated Physical Signal
Split_Shaft_PTO_Status_Cmd	1602-E13	Digital Output	P_DOUT_1A1	Split Shaft PTO Status Command
P_DIN_DIN28	1606-L	Digital Input	P_DIN_DIN28	ESC II - Booster Pump Monitor Input
Rear_Axle_Status	1606-L	Digital Input	P_DIN_DIN28	Rear Axle Sensor of the transfer case to BCM as Engaged or Disengaged
P_DIN_DIN31	1607-A1	Digital Input	P_DIN_DIN31	Manually Generated Physical Signal
PTO_Status	1607-A1	Digital Input	P_DIN_DIN31	PTO Status to know Engagement or Disengagement
Aux_Output_Status	1607-A2	Digital Input	P_DIN_DIN32	Aux output Status for Engagement or Disengagement
P_DIN_DIN32	1607-A2	Digital Input	P_DIN_DIN32	Manually Generated Physical Signal
Split_Shaft_PTO_Switch		J1939 Input	P_J1939IN_152_61184_...	This switch signal will be set when switch is pressed at Top position.
Split_Shaft_PTO_Switch_Ind_Color		J1939 Output	P_J1939OUT_33_61184_...	This switch indicator color signal is used as switch telltale for Split...
Split_Shaft_PTO_Switch_Ind_Cmd		J1939 Output	P_J1939OUT_33_61184_...	This switch indicator signal is used as switch telltale for Split Shaft...
Transfer_Case_Failsafe_Flag				Internal signal for Transfer Case PTO failsafe conditions
Xfer_Case_PTO_Engage_Error_Timer				Internal timer for Transfer Case PTO Engage Error fault condition
Vehicle_Speed				Wheel-based vehicle speed broadcasted from engine every 100ms Scale is ...

33.2. 13WDN: PTO CONTROL, DASH MOUNTED for Customer Provided PTO; Includes 2-Independent Illuminated Switches, 2-Electric/Air Solenoids, Piping and Wiring.

Note: Not compatible with T14 Transmission

Feature Applicability to Vehicle Platforms:

- Heavy Vocational (HV)
- Line Haul Transport (LT)
- Medium Vocational (MV)
- Regional Haul (RH)
- Heavy Extreme (HX) 2021 and Newer

Extended Description: This feature provides the customer with the ability to control two customer-supplied PTOs with two in-dash switches and two air solenoids. This feature provides all the software and wiring to the air solenoids located inside the driver's side frame rail next to the transmission. Customers must supply and route air plumbing to the PTOs. Programmable parameters allow customers to customize the functionality of their PTOs.

System Block Diagram:

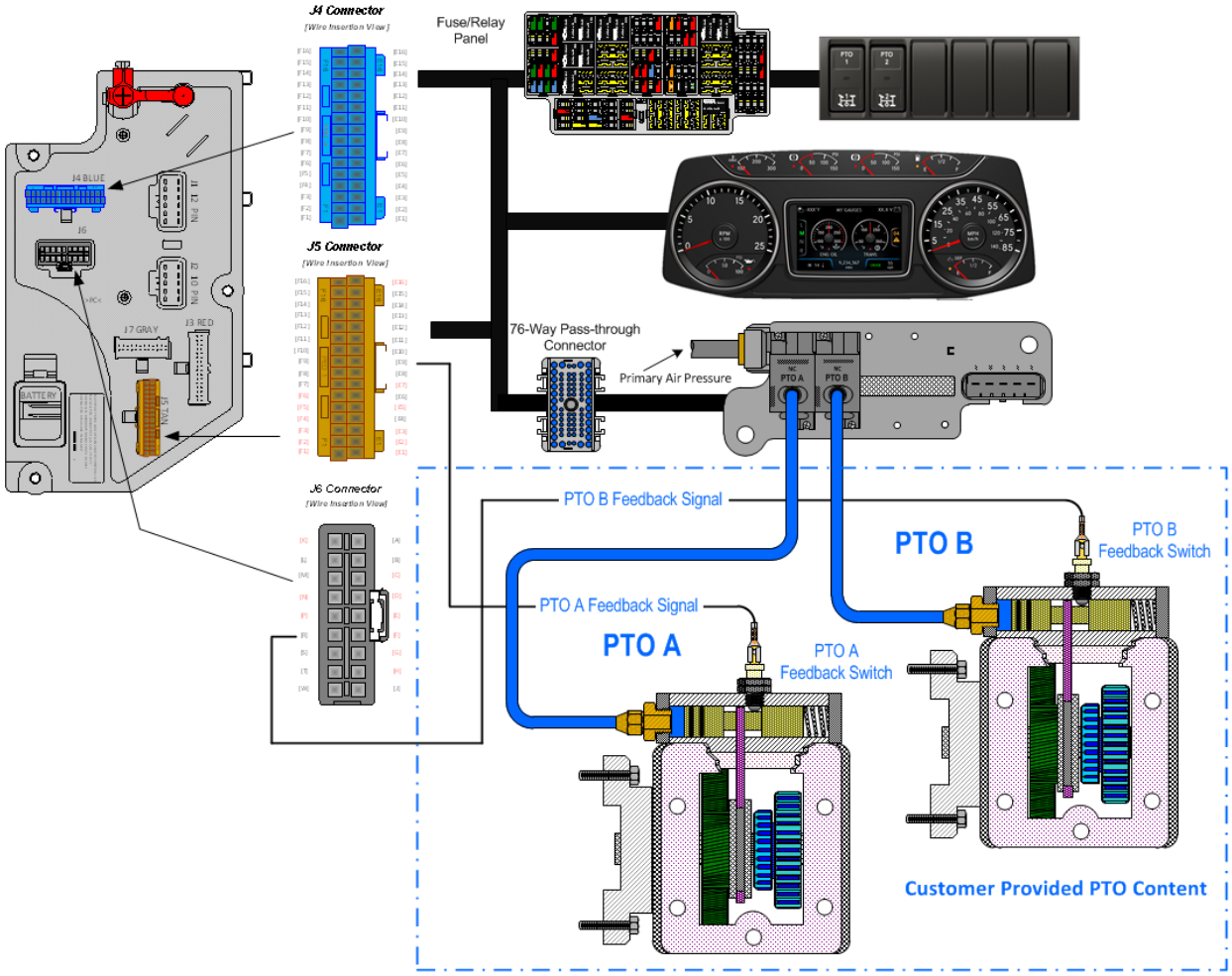

Note: It is important to ensure the Power Take Off (PTO) internal shift mechanism has adequate pneumatic potential communication for the full engagement of the PTO coupling/decoupling mechanism. Full engagement is typically a function of the available pneumatic potential sourced from the chassis primary air pressure supply system which [can] limit the full power transmission capabilities of the PTO coupling and decoupling mechanism/s.

Body Controller Software Feature Codes:

- 597133 - BCM PROG, **TRANSMISSION PTO Dual**
- 597306 - BCM PROG, **TRANSMISSION PTO Dual PTO, with 42 Parameters**
- **Note: if Eaton® Procision™ or Endurant™ Transmission is being used, add:**
  - **597276 – BCM PROG, PTO ENABLER J1939 Engagement Consent for Eaton® Procision™ and Endurant™**

Body Controller Software Feature Code Parameters:

All Parameters below are exclusive to 597133							
On – Indicates a 1 is set for the parameter							
Off – Indicates a 0 is set in for this parameter							
Parameter	**ID**	**Description**	**Default**	**Units**	**Min**	**Max**	**Step**
PTOb_Clutch_Pedal	2017	Set to 0 to ignore the clutch pedal or if the vehicle does not have a clutch pedal. Set to 1 to ensure that the clutch pedal is depressed for engagement.	OFF	N/A	N/A	N/A	N/A
PTOb_Engine_Running	2018	Set to 0 to ignore the engine. Set to 1 to ensure that the engine is running to engage and disengage if the engine stops running.	ON	N/A	N/A	N/A	N/A
PTOb_Engine_Speed_Range	2019	Set to a speed that the engine must be below for the PTO to engage. The PTO will disengage if the engine speed becomes greater than the set value. If engine speed is required for PTO operation, please use PTOb_Engine_Speed_Enable to enable this interlock.	300	RPM	300	3000	10
PTOb_Transmission_Neutral	2020	**NOTE**, this parameter will only work for vehicles with automated manual transmissions. Set to 0 to ignore the transmission state. Set to 1 to ensure that the transmission is in neutral for engagement.	OFF	N/A	N/A	N/A	N/A
PTOb_Park_Brake	2021	Set to 0 to ignore the park brake. Set to 1 to ensure that the park brake is set for engage and disengage if the park brake is released.	ON	N/A	N/A	N/A	N/A
PTOb_Vehicle_Speed_Range	2031	Set to the speed that the vehicle must be below for the PTO to engage. The PTO will disengage if the vehicle speed becomes greater than the set value. If vehicle speed is required for PTO operation, please use PTOb_Vehicle_Speed_Enable parameter to enable this interlock.	3.00	MPH	1	100	1
PTOb_Engine_Speed_Enable	2050	Set to 0 to ignore the engine speed. Set to 1 to require the vehicle to be below a specified engine speed for the PTO to be engaged. Please use PTOb_Engine_Speed_Range to specify the appropriate engine speed if this parameter is set to 1.	OFF	N/A	N/A	N/A	N/A
PTOb_Engine_Speed_Alarm_Enable	2051	Set to 0 to not have an alarm based on engine speed. Set to 1 to have a speed that an alarm will sound when the PTO is engaged, and the engine speed is greater than the set value. Please use	OFF	N/A	N/A	N/A	N/A

		PTOb_Engine_Speed_Alarm_Range to specify the appropriate engine speed if this parameter is set to 1.					
PTOb_Vehicle_Speed_Enable	2052	Set to 0 to ignore the vehicle speed. Set to 1 to require the vehicle to be below a specified vehicle speed for the PTO to engage. Please use PTOb_Vehicle_Speed_Range to specify the appropriate vehicle speed if this parameter is set to 1.	ON	N/A	N/A	N/A	N/A
PTOb_Vehicle_Speed_Alarm_Enable	2053	Set to 0 to not have an alarm based on vehicle speed. Set to 1 to have a speed limit that an alarm will sound when the PTO is engaged, and the vehicle speed is greater than the set value. Please use PTOb_Vehicle_Speed_Alarm_Range to specify the appropriate vehicle speed if this parameter is set to 1.	OFF	N/A	N/A	N/A	N/A
PTOb_Engine_Speed_Alarm_Range	2140	Set to a speed that an alarm will sound when the PTO is engaged, and the engine speed is greater than the set value. If an engine speed alarm is required for PTO operation, please use PTOb_Engine_Speed_Alarm_Enable parameter to enable this alarm.	300	RPM	300	3000	10
PTOb_Vehicle_Speed_Alarm_Range	2141	Set to a speed limit that an alarm will sound when the PTO is engaged, and the vehicle speed is greater than the set value. If the vehicle alarm is required for PTO operation, please use PTOb_Vehicle_Speed_Alarm_Enable to enable this alarm.	3.00	MPH	1	100	1
PTOa_Vehicle_Speed_Enable	2242	Set to 0 to ignore the vehicle speed. Set to 1 to require the vehicle to be below a specified vehicle speed for the PTO to engage. Please use PTOa_Vehicle_Speed_Range to specify the appropriate vehicle speed if this parameter is set to 1.	ON	N/A	N/A	N/A	N/A
PTOa_Engine_Speed_Enable	2243	Set to 0 to ignore the engine speed. Set to 1 to require the vehicle to be below a specified engine speed for the PTO to be engaged. Please use PTOa_Engine_Speed_Range to specify the appropriate engine speed if this parameter is set to 1.	OFF	N/A	N/A	N/A	N/A
PTOa_Engine_Speed_Alarm_Enable	2244	Set to 0 to not have an alarm based on engine speed. Set to 1 to have a speed that an alarm will sound when the PTO is engaged, and the engine speed is greater than the set value. Please use PTOa_Engine_Speed_Alarm_Range to specify the appropriate engine speed if this parameter is set to 1.	OFF	N/A	N/A	N/A	N/A

PTOa_Vehicle_Speed_Alarm_Enable	2267	Set to 0 to not have an alarm based on vehicle speed. Set to 1 to have a speed limit that an alarm will sound when the PTO is engaged, and the vehicle speed is greater than the set value. Please use PTOa_Vehicle_Speed_Alarm_Range to specify the appropriate vehicle speed if this parameter is set to 1.	OFF	N/A	N/A	N/A	N/A
PTOa_Clutch_Pedal	2333	Set to 0 to ignore the clutch pedal or if the vehicle does not have a clutch pedal. Set to 1 to ensure that the clutch pedal is depressed for engagement.	OFF	N/A	N/A	N/A	N/A
PTOa_Engine_Running	2334	Set to 0 to ignore the engine. Set to 1 to ensure that the engine is running to engage and disengage if the engine stops running.	ON	N/A	N/A	N/A	N/A
PTOa_Engine_Speed_Range	2336	Set to a speed that the engine must be below for the PTO to engage. The PTO will disengage if the engine speed becomes greater than the set value. If engine speed is required for PTO operation, please use PTOa_Engine_Speed_Enable to enable this interlock.	300	RPM	300	3000	10
PTOa_Park_Brake	2338	Set to 0 to ignore the park brake. Set to 1 to ensure that the park brake is set for engage and disengage if the park brake is released.	ON	N/A	N/A	N/A	N/A
PTOa_Vehicle_Speed_Range	2339	Set to the speed that the vehicle must be below for the PTO to engage. The PTO will disengage if the vehicle speed becomes greater than the set value. If vehicle speed is required for PTO operation, please use PTOa_Vehicle_Speed_Enable parameter to enable this interlock.	3.00	MPH	1	100	1
PTOa_Engine_Speed_Alarm_Range	2340	Set to a speed that an alarm will sound when the PTO is engaged, and the engine speed is greater than the set value. If an engine speed alarm is required for PTO operation, please use PTOa_Engine_Speed_Alarm_Enable parameter to enable this alarm.	300	RPM	300	3000	10
PTOa_Vehicle_Speed_Alarm_Range	2342	Set to a speed limit that an alarm will sound when the PTO is engaged, and the vehicle speed is greater than the set value. If the vehicle alarm is required for PTO operation, please use PTOa_Vehicle_Speed_Alarm_Enable to enable this alarm.	3.00	MPH	1	100	1
PTOa_Transmission_Neutral	2355	**NOTE**, this parameter will only work for vehicles with automated manual transmissions. Set to 0 to ignore the	OFF	N/A	N/A	N/A	N/A

		transmission state. Set to 1 to ensure that the transmission is in neutral for engagement.					
All Parameters below are exclusive to 597306							
On – Indicates a 1 is set for the parameter							
Off – Indicates a 0 is set in for this parameter							
Parameters 2069-2149 all apply to PTO							
Parameter	**ID**	**Description**	**Default**	**Units**	**Min**	**Max**	**Step**
ENGAGEMENT PARAMETERS							
TEM_PTO_PK_Brake_Engmnt_Inhib	2087	If this Parameter is 1, the PTO will not be engaged if the Park Brake is not set.	OFF	N/A	N/A	N/A	N/A
TEM_PTO_Non_Neut_Engmnt_Inhib	2088	If this Parameter is 1, the PTO will not be engaged if the Transmission is not in Neutral or Park	OFF	N/A	N/A	N/A	N/A
TEM_PTO_Neut_Engmnt_Inhib	2089	If this Parameter is 1, the PTO will only be engaged if the Transmission is not in Neutral or Park	OFF	N/A	N/A	N/A	N/A
TEM_PTO_Veh_Spd_Engmnt_Inhib	2090	If this Parameter is 1, the PTO will not be engaged if the vehicle speed is over the value set in TEM_PTO_Veh_Spd_Engmnt_Limit	ON	N/A	N/A	N/A	N/A
TEM_PTO_Veh_Spd_Engmnt_Limit	2091	See TEM_PTO_Veh_Spd_Engmnt_Inhib	3.00	MPH	1	100	1
TEM_PTO_Eng_Spd_Engmnt_Inhib	2092	If this Parameter is 1, the PTO will not be engaged if the engine speed is over the value set in TEM_PTO_Eng_Spd_Engmnt_Limit	ON	N/A	N/A	N/A	N/A
TEM_PTO_Eng_Spd_Engmnt_Limit	2093	See TEM_PTO_Eng_Spd_Engmnt_Inhib	1000	RPM	100	5000	0.1
TEM_PTO_Cltch_Engmnt_Inhib	2094	If this Parameter is 1, the PTO will not be engaged if the clutch pedal is not depressed	OFF	N/A	N/A	N/A	N/A
TEM_PTO_Brake_Engmnt_Inhib	2095	If this Parameter is 1, the PTO will not be engaged if the brake pedal is not depressed	OFF	N/A	N/A	N/A	N/A
TEM_PTO_Eng_Run_Engmnt_Inhib	2096	If this Parameter is 1, the PTO will not be engaged if the engine is not running	ON	N/A	N/A	N/A	N/A
TEM_PTO_Air_Pres_Engmnt_Inhib	2097	If this Parameter is 1, the PTO will not be engaged if the primary vehicle air pressure is below TEM_PTO_Air_Pres_Engmnt_Limit	ON	N/A	N/A	N/A	N/A
TEM_PTO_Air_Pres_Engmnt_Limit	2098	See TEM_PTO_Air_Pres_Engmnt_Inhib	90	PSI	1	500	1
TEM_PTO_Mast_Swtch_Engmnt_Inhib	2099	If this Parameter is 1, the PTO will not be engaged if the vehicle master switch is not ON.	OFF	N/A	N/A	N/A	N/A
ESC_PTO_Engaged_Param	2199	Active State for the PTO engagement feedback switch.	1	No Units	0	3	1
DISENGAGEMENT PARAMETERS							

TEM_PTO_Pk_Brake_Disengages	2108	if this Parameter is 1, the PTO will be disengaged if the Park Brake is released	OFF	N/A	N/A	N/A	N/A
TEM_PTO_Non_Neut_Disengages	2109	if this Parameter is 1, the PTO will be disengaged if the transmission is taken out of neutral	OFF	N/A	N/A	N/A	N/A
TEM_PTO_Veh_Spd_Disengages	2110	if this Parameter is 1, the PTO will be disengaged if the vehicle speed is over the value set in TEM_PTO_Veh_Spd_DisEng_Limit	OFF	N/A	N/A	N/A	N/A
TEM_PTO_Veh_Spd_DisEng_Limit	2111	see TEM_PTO_Veh_Spd_Disengages	3	MPH	3	100	1
TEM_PTO_Eng_Spd_Disengages	2112	if this Parameter is 1, the PTO will be disengaged if the vehicle speed is over the value set in TEM_PTO_Eng_Spd_DisEng_Limit	OFF	N/A	N/A	N/A	N/A
TEM_PTO_Eng_Spd_DisEng_Limit	2113	see TEM_PTO_Eng_Spd_Disengages	2000	RPM	0	5000	1
TEM_PTO_Eng_Run_Disengages	2114	If this Parameter is 1, the PTO will be disengaged if the engine is turned off	ON	N/A	N/A	N/A	N/A
TEM_PTO_Air_Pres_Disengages	2115	if this Parameter is 1, the PTO will be disengaged if the primary air pressure is below the value set in TEM_PTO_Air_Pres_DisEng_Limit	ON	N/A	N/A	N/A	N/A
TEM_PTO_Air_Pres_DisEng_Limit	2116	see TEM_PTO_Air_Pres_Disengages	80	PSI	0	500	1
TEM_PTO_Ext_Input_Disengages	2117	if this Parameter is 1, the PTO will be disengaged if the external input designated for this purpose is active	OFF	N/A	N/A	N/A	N/A
TEM_PTO_Mast_Swtch_Disengages	2118	if this Parameter is 1, the PTO will be disengaged if the vehicle master switch is not ON	OFF	N/A	N/A	N/A	N/A
RE-ENGAGEMENT PARAMETERS							
TEM_PTO_Key_State_Allow_ReEng	2069	If this parameter is set, the PTO will be allowed to reengage when the key state is returned to run.	OFF	N/A	N/A	N/A	N/A
TEM_PTO_Veh_Spd_Allow_ReEng	2119	if this Parameter is 1, the PTO will be reengaged after a disengage due to vehicle overspeed when the vehicle speed is below TEM_PTO_Veh_Spd_Engmnt_Limit	OFF	N/A	N/A	N/A	N/A
TEM_PTO_Eng_Spd_Allow_ReEng	2120	if this Parameter is 1, the PTO will be reengaged after a disengage due to engine overspeed when the engine speed is below TEM_PTO_Eng_Spd_Engmnt_Limit	ON	N/A	N/A	N/A	N/A
TEM_PTO_Ext_Input_Allow_ReEng	2121	if this Parameter is 1, the PTO will be reengaged after a disengage due to the designated external input when the external input is no longer active	OFF	N/A	N/A	N/A	N/A
TEM_PTO_Eng_Run_Allow_ReEng	2122	if this Parameter is 1, the PTO will be reengaged after a disengage due to the engine stopping when the engine is restarted	OFF	N/A	N/A	N/A	N/A
TEM_PTO_Mast_Swtch_Allow_ReEng	2123	if this Parameter is 1, the PTO will be reengaged after a disengage due to the master switch being turned off	OFF	N/A	N/A	N/A	N/A

		when the master switch is turned on again					
TEM_PTO_Air_Pres_Allow_ReEng	2124	if this Parameter is 1, the PTO will be reengaged after a disengage due to low vehicle air pressure when the primary air pressure is over TEM_PTO_Air_Pres_Engmnt_Limit	OFF	N/A	N/A	N/A	N/A
TEM_PTO_Non_Neut_Allow_ReEng	2148	if this Parameter is 1, the PTO will be reengaged after a disengage due to transmission out of neutral when the transmission is placed back into neutral.	OFF	N/A	N/A	N/A	N/A
TEM_PTO_Pk_Brake_Allow_ReEng	2149	if this Parameter is 1, the PTO will be reengaged after a disengage due to park brake released when the park brake is reapplied.	OFF	N/A	N/A	N/A	N/A
ALARMS PARAMETERS							
TEM_PTO_Pk_Brake_Alarms	2131	if this Parameter is 1, an alarm will sound if the PTO is engaged, and the park brake is released	OFF	N/A	N/A	N/A	N/A
TEM_PTO_Non_Neut_Alarms	2132	if this Parameter is 1, an alarm will sound if the PTO is engaged, and transmission is taken out of neutral	OFF	N/A	N/A	N/A	N/A
TEM_PTO_Veh_Spd_Alarms	2133	if this Parameter is 1, an alarm will sound if the PTO is engaged, and the vehicle speed is over TEM_PTO_Veh_Spd_Alarm_Limit	OFF	N/A	N/A	N/A	N/A
TEM_PTO_Veh_Spd_Alarm_Limit	2134	See TEM_PTO_Veh_Spd_Alarms	5	MPH	3	100	1
TEM_PTO_Eng_Spd_Alarms	2135	if this Parameter is 1, an alarm will sound if the PTO is engaged, and the engine speed is over TEM_PTO_Eng_Spd_Alarm_Limit	OFF	N/A	N/A	N/A	N/A
TEM_PTO_Eng_Spd_Alarm_Limit	2136	See TEM_PTO_Eng_Spd_Alarms	1400	RPM	0	5000	0.1
TEM_PTO_Eng_Run_Alarms	2137	if this Parameter is 1, an alarm will sound if the PTO is engaged, and the engine is turned off	OFF	N/A	N/A	N/A	N/A
TEM_PTO_Air_Pres_Alarms	2138	if this Parameter is 1, an alarm will sound if the primary air pressure is below TEM_PTO_Air_Pres_Alarm_Limit	OFF	N/A	N/A	N/A	N/A
TEM_PTO_Air_Pres_Alarm_Limit	2139	See TEM_PTO_Air_Pres_Alarms	0	PSI	0	500	1
Parameters 2676-2772 all apply to PTOb							
ENGAGEMENT PARAMETERS							
TEM_PTOb_Brake_Engmnt_Inhib	2676	If this Parameter is 1, PTOb will not be engaged if the brake pedal is not depressed	OFF	N/A	N/A	N/A	N/A
TEM_PTOb_Cltch_Engmnt_Inhib	2677	If this Parameter is 1, PTOb will not be engaged if the clutch pedal is not depressed	OFF	N/A	N/A	N/A	N/A
TEM_PTOb_Eng_Run_Engmnt_Inhib	2678	If this Parameter is 1, PTOb will not be engaged if the engine is not running	ON	N/A	N/A	N/A	N/A
TEM_PTOb_Eng_Spd_Engmnt_Inhib	2679	If this Parameter is 1, PTOb will not be engaged if the engine speed is	ON	N/A	N/A	N/A	N/A

		over the value set in TEM_PTOb_Eng_Spd_Engmnt_Limit					
TEM_PTOb_Eng_Spd_Engmnt_Limit	2680	See TEM_PTOb_Eng_Spd_Engmnt_Inhib	1000	RPM	100	5000	0.1
TEM_PTOb_Neut_Engmnt_Inhib	2681	If this Parameter is 1, PTOb will only be engaged if the Transmission is NOT in Neutral or Park	OFF	N/A	N/A	N/A	N/A
TEM_PTOb_Non_Neut_Engmnt_Inhib	2682	If this Parameter is 1, PTOb will not be engaged if the Transmission is not in Neutral or Park	OFF	N/A	N/A	N/A	N/A
TEM_PTOb_PK_Brake_Engmnt_Inhib	2683	If this Parameter is 1, PTOb will not be engaged if the Park Brake is not set.	OFF	N/A	N/A	N/A	N/A
TEM_PTOb_Veh_Spd_Engmnt_Inhib	2684	If this Parameter is 1, PTOb will not be engaged if the vehicle speed is over the value set in TEM_PTOb_Veh_Spd_Engmnt_Limit	ON	N/A	N/A	N/A	N/A
TEM_PTOb_Veh_Spd_Engmnt_Limit	2685	See TEM_PTOb_Veh_Spd_Engmnt_Inhib	3.00	MPH	1	100	1
TEM_PTOb_Air_Pres_Engmnt_Inhib	2711	If this Parameter is 1, PTOb will not be engaged if the primary vehicle air pressure is below TEM_PTOb_Air_Pres_Engmnt_Limit	ON	N/A	N/A	N/A	N/A
TEM_PTOb_Air_Pres_Engmnt_Limit	2712	See TEM_PTOb_Air_Pres_Engmnt_Inhib	90	PSI	1	500	1
TEM_PTOb_Mast_Swtch_Engmnt_Inhib	2714	If this Parameter is 1, PTOb will not be engaged if the vehicle master switch is not ON.	OFF	N/A	N/A	N/A	N/A
ESC_PTOb_Engaged_Param	3357	Active State for PTOb engagement feedback switch.	1	No Units	0	3	1
DISENGAGEMENT PARAMETERS							
TEM_PTOb_Eng_Run_Disengages	2686	If this Parameter is 1, PTOb will be disengaged if the engine is turned off	ON	N/A	N/A	N/A	N/A
TEM_PTOb_Eng_Spd_DisEng_Limit	2687	see TEM_PTOb_Eng_Spd_Disengages	2000	RPM	0	5000	1
TEM_PTOb_Eng_Spd_Disengages	2688	if this Parameter is 1, PTOb will be disengaged if the vehicle speed is over the value set in TEM_PTO_Eng_Spd_DisEng_Limit	OFF	N/A	N/A	N/A	N/A
TEM_PTOb_Non_Neut_Disengages	2689	if this Parameter is 1, PTOb will be disengaged if the transmission is taken out of neutral	OFF	N/A	N/A	N/A	N/A
TEM_PTOb_Pk_Brake_Disengages	2690	if this Parameter is 1, PTOb will be disengaged if the Park Brake is released	OFF	N/A	N/A	N/A	N/A
TEM_PTOb_Veh_Spd_Disengages	2691	if this Parameter is 1, PTOb will be disengaged if the vehicle speed is over the value set in TEM_PTOb_Veh_Spd_DisEng_Limit	OFF	N/A	N/A	N/A	N/A

TEM_PTOb_Veh_Spd_DisEng_Limit	2692	see TEM_PTOb_Veh_Spd_Disengages	3	MPH	3	100	1
TEM_PTOb_Mast_Swtch_Disengages	2718	if this Parameter is 1, PTOb will be disengaged if the vehicle master switch is not ON	OFF	N/A	N/A	N/A	N/A
TEM_PTOb_Air_Pres_Disengages	2716	if this Parameter is 1, PTOb will be disengaged if the primary air pressure is below the value set in TEM_PTOb_Air_Pres_DisEng_Limit	ON	N/A	N/A	N/A	N/A
TEM_PTOb_Air_Pres_DisEng_Limit	2719	see TEM_PTOb_Air_Pres_Disengages	80	PSI	0	500	1
TEM_PTOb_Ext_Input_Disengages	2772	if this Parameter is 1, PTOb will be disengaged if the external input designated for this purpose is active	OFF	N/A	N/A	N/A	N/A
RE-ENGAGEMENT PARAMETERS							
TEM_PTOb_Eng_Run_Allow_ReEng	2693	if this Parameter is 1, PTOb will be reengaged after a disengage due to the engine stopping when the engine is restarted	OFF	N/A	N/A	N/A	N/A
TEM_PTOb_Eng_Spd_Allow_ReEng	2694	if this Parameter is 1, PTOb will be reengaged after a disengage due to engine overspeed when the engine speed is below TEM_PTOb_Eng_Spd_Engmnt_Limit	ON	N/A	N/A	N/A	N/A
TEM_PTOb_Key_State_Allow_ReEng	2696	If this parameter is set, PTOb will be allowed to reengage when the key state is returned to run.	OFF	N/A	N/A	N/A	N/A
TEM_PTOb_Non_Neut_Allow_ReEng	2697	if this Parameter is 1, PTOb will be reengaged after a disengage due to transmission out of neutral when the transmission is placed back into neutral.	OFF	N/A	N/A	N/A	N/A
TEM_PTOb_Pk_Brake_Allow_ReEng	2698	if this Parameter is 1, PTOb will be reengaged after a disengage due to park brake released when the park brake is reapplied.	OFF	N/A	N/A	N/A	N/A
TEM_PTOb_Veh_Spd_Allow_ReEng	2699	if this Parameter is 1, PTOb will be reengaged after a disengage due to vehicle overspeed when the vehicle speed is below TEM_PTOb_Veh_Spd_Engmnt_Limit	OFF	N/A	N/A	N/A	N/A
TEM_PTOb_Air_Pres_Allow_ReEng	2713	if this Parameter is 1, PTOb will be reengaged after a disengage due to low vehicle air pressure when the primary air pressure is over TEM_PTOb_Air_Pres_Engmnt_Limit	OFF	N/A	N/A	N/A	N/A
TEM_PTOb_Mast_Swtch_Allow_ReEng	2715	if this Parameter is 1, the PTO will be reengaged after a disengage due to the master switch being turned off when the master switch is turned on again	OFF	N/A	N/A	N/A	N/A
TEM_PTOb_Ext_Input_Allow_ReEng	2771	if this Parameter is 1, PTOb will be reengaged after a disengage due to the designated external input when the external input is no longer active	OFF	N/A	N/A	N/A	N/A

ALARMS PARAMETERS							
TEM_PTOb_Air_Pres_Alarms	2700	if this Parameter is 1, an alarm will sound if the primary air pressure is below TEM_PTOb_Air_Pres_Alarm_Limit	OFF	N/A	N/A	N/A	N/A
TEM_PTOb_Air_Pres_Alarm_Limit	2701	See TEM_PTOb_Air_Pres_Alarms	0	PSI	0	500	1
TEM_PTOb_Eng_Run_Alarms	2702	if this Parameter is 1, an alarm will sound if PTOb is engaged, and the engine is turned off	OFF	N/A	N/A	N/A	N/A
TEM_PTOb_Eng_Spd_Alarm_Limit	2703	See TEM_PTOb_Eng_Spd_Alarms	1400	RPM	0	5000	0.1
TEM_PTOb_Eng_Spd_Alarms	2704	if this Parameter is 1, an alarm will sound if PTOb is engaged, and the engine speed is over TEM_PTOb_Eng_Spd_Alarm_Limit	OFF	N/A	N/A	N/A	N/A
TEM_PTOb_Non_Neut_Alarms	2705	if this Parameter is 1, an alarm will sound if PTOb is engaged, and transmission is taken out of neutral	OFF	N/A	N/A	N/A	N/A
TEM_PTOb_Pk_Brake_Alarms	2706	if this Parameter is 1, an alarm will sound if PTOb is engaged, and the park brake is released	OFF	N/A	N/A	N/A	N/A
TEM_PTOb_Veh_Spd_Alarms	2708	if this Parameter is 1, an alarm will sound if PTOb is engaged, and the vehicle speed is over TEM_PTOb_Veh_Spd_Alarm_Limit	OFF	N/A	N/A	N/A	N/A
TEM_PTOb_Veh_Spd_Alarm_Limit	2709	See TEM_PTOb_Veh_Spd_Alarms	5	MPH	3	100	1

Parameter Definitions:

Parameters exclusive to 597133

- **PTOb_Clutch_Pedal** – 2017 Set to 0 to ignore the clutch pedal or if the vehicle does not have a clutch pedal. Set to 1 to ensure that the clutch pedal is depressed for PTOb engagement.
- **PTOb_Engine_Running** – 2018 Set to 0 to ignore the engine. Set to 1 to ensure that the engine is running to engage and disengage if the engine stops running.
- **PTOb_Engine_Speed_Range** – 2019 Set to a speed that the engine must be below for PTOb to engage. PTOb will disengage if the engine speed becomes greater than the set value. If engine speed is required for PTO operation, please use PTOb_Engine_Speed_Enable to enable this interlock.
- **PTOb_Transmission_Neutral** – 2020 **NOTE:** this parameter will only work for vehicles with automated manual transmissions. Set to 0 to ignore the transmission state. Set to 1 to ensure that the transmission is in neutral for engagement.
- **PTOb_Park_Brake** – 2021 Set to 0 to ignore the park brake. Set to 1 to ensure that the park brake is set for engage and disengage if the park brake is released.

- **PTOb_Vehicle_Speed_Range** – 2031 Set to the speed that the vehicle must be below for PTOb to engage. PTOb will disengage if the vehicle speed becomes greater than the set value. If vehicle speed is required for PTO operation, please use PTOb_Vehicle_Speed_Enable parameter to enable this interlock.
- **PTOb_Engine_Speed_Enable** – 2050 Set to 0 to ignore the engine speed. Set to 1 to require the vehicle to be below a specified engine speed for PTOb to be engaged. Please use PTOb_Engine_Speed_Range to specify the appropriate engine speed if this parameter is set to 1.
- **PTOb_Engine_Speed_Alarm_Enable** – 2051 Set to 0 to not have an alarm based on engine speed. Set to 1 to have a speed that an alarm will sound when PTOb is engaged, and the engine speed is greater than the set value. Please use PTOb_Engine_Speed_Alarm_Range to specify the appropriate engine speed if this parameter is set to 1.
- **PTOb_Vehicle_Speed_Enable** – 2052 Set to 0 to ignore the vehicle speed. Set to 1 to require the vehicle to be below a specified vehicle speed for the PTO to engage. Please use PTOb_Vehicle_Speed_Range to specify the appropriate vehicle speed if this parameter is set to 1.
- **PTOb_Vehicle_Speed_Alarm_Enable** – 2053 Set to 0 to not have an alarm based on vehicle speed. Set to 1 to have a speed limit that an alarm will sound when PTOb is engaged, and the vehicle speed is greater than the set value. Please use PTOb_Vehicle_Speed_Alarm_Range to specify the appropriate vehicle speed if this parameter is set to 1.
- **PTOb_Engine_Speed_Alarm_Range** – 2140 Set to the speed that the vehicle must be below for PTOb to engage. PTOb will disengage if the vehicle speed becomes greater than the set value. If vehicle speed is required for PTOb operation, please use PTOb_Engine_Speed_Alarm_Enable parameter to enable this interlock.
- **PTOb_Vehicle_Speed_Alarm_Range** – 2141 Set to a speed limit that an alarm will sound when PTOb is engaged, and the vehicle speed is greater than the set value. If the vehicle alarm is required for PTOb operation, please use PTOb_Vehicle_Speed_Alarm_Enable to enable this alarm.
- **PTOa_Vehicle_Speed_Enable** – 2242 Set to 0 to ignore the vehicle speed. Set to 1 to require the vehicle to be below a specified vehicle speed for the PTOa to engage. Please use PTOa_Vehicle_Speed_Range to specify the appropriate vehicle speed if this parameter is set to 1.
- **PTOa_Engine_Speed_Enable** – 2243 Set to 0 to ignore the engine speed. Set to 1 to require the vehicle to be below a specified engine speed for the PTOa to be engaged. Please use PTOa_Engine_Speed_Range to specify the appropriate engine speed if this parameter is set to 1.
- **PTOa_Engine_Speed_Alarm_Enable** – 2244 Set to 0 to not have an alarm based on engine speed. Set to 1 to have a speed that an alarm will sound when

the PTOa is engaged, and the engine speed is greater than the set value. Please use PTOa_Engine_Speed_Alarm_Range to specify the appropriate engine speed if this parameter is set to 1.

- **PTOa_Vehicle_Speed_Alarm_Enable** – 2267 Set to 0 to not have an alarm based on vehicle speed. Set to 1 to have a speed limit that an alarm will sound when the PTOa is engaged, and the vehicle speed is greater than the set value. Please use PTOa_Vehicle_Speed_Alarm_Range to specify the appropriate vehicle speed if this parameter is set to 1.
- **PTOa_Clutch_Pedal** – 2333 Set to 0 to ignore the clutch pedal or if the vehicle does not have a clutch pedal. Set to 1 to ensure that the clutch pedal is depressed for PTOa engagement.
- **PTOa_Engine_Running** – 2334 Set to 0 to ignore the engine. Set to 1 to ensure that the engine is running to engage and disengage if the engine stops running.
- **PTOa_Engine_Speed_Range** – 2336 Set to a speed that the engine must be below for the PTOa to engage. The PTOa will disengage if the engine speed becomes greater than the set value. If engine speed is required for PTOa operation, please use PTOa_Engine_Speed_Enable to enable this interlock.
- **PTOa_Park_Brake** – 2338 Set to 0 to ignore the park brake. Set to 1 to ensure that the park brake is set for engage and disengage if the park brake is released.
- **PTOa_Vehicle_Speed_Range** – 2339 Set to the speed that the vehicle must be below for the PTOa to engage. The PTOa will disengage if the vehicle speed becomes greater than the set value. If vehicle speed is required for PTOa operation, please use PTOa_Vehicle_Speed_Enable parameter to enable this interlock.
- **PTOa_Engine_Speed_Alarm_Range** – 2340 Set to the speed that the vehicle must be below for the PTOa to engage. The PTOa will disengage if the vehicle speed becomes greater than the set value. If vehicle speed is required for PTOa operation, please use PTOa_Engine_Speed_Alarm_Enable parameter to enable this interlock.
- **PTOa_Vehicle_Speed_Alarm_Range** – 2342 Set to a speed limit that an alarm will sound when the PTOa is engaged, and the vehicle speed is greater than the set value. If the vehicle alarm is required for PTOa operation, please use PTOa_Vehicle_Speed_Alarm_Enable to enable this alarm.
- **PTOa_Transmission_Neutral** – 2355 **NOTE:** this parameter will only work for vehicles with automated manual transmissions. Set to 0 to ignore the transmission state. Set to 1 to ensure that the transmission is in neutral for engagement.

Parameters exclusive to 597306

- **ENGAGEMENT PARAMETERS**

These parameters set rules that must be met for the PTO to be engaged.

Example :

If TEM_PTO_Air_Pres_Engmnt_Inhib parameter is turned on, the PTO cannot be engaged if the primary vehicle air pressure is below the programmable parameter set by TEM_PTO_Air_Pres_Engmnt_Limit. **for Dash Switch**

- **TEM_PTO_PK_Brake_Engmnt_Inhib** – 2087 If this parameter is turned on, then the brake pedal must be depressed for the PTO to engage.
- **TEM_PTO_Non_Neut_Engmnt_Inhib** – 2088 If this parameter is turned on, then the transmission must be in Neutral or Park for the PTO to be engaged.
- **TEM_PTO_Neut_Engmnt_Inhib** – 2089 If this parameter is turned on, then the PTO can only be engaged if the transmission is NOT in Neutral or Park.
- **TEM_PTO_Veh_Spd_Engmnt_Inhib** – 2090 If this parameter is turned on, then the PTO cannot be engaged if the vehicle speed is over the value prescribed by TEM_PTO_Veh_Spd_Engmnt_Limit.
- **TEM_PTO_Veh_Spd_Engmnt_Limit** – 2091 This parameter sets the physical value for the Vehicle Speed Inhibit.
- **TEM_PTO_Eng_Spd_Engmnt_Inhib** –2092 If this is parameter is turned on, then the PTO cannot be engaged if the engine speed is over a certain threshold, which is defined as a programmable parameter in TEM_PTO_Eng_Spd_Engmnt_Limit.
- **TEM_PTO_Eng_Spd_Engmnt_Limit** – 2093 This parameter sets the physical value for the Engine Speed Inhibit.
- **TEM_PTO_Cltch_Engmnt_Inhib** – 2094 If this parameter is turned on, then the clutch pedal must be depressed for the PTO to engage.
- **TEM_PTO_Brake_Engmnt_Inhib** – 2095 If this parameter is turned on, then the brake pedal must be depressed for the PTO to engage.
- **TEM_PTO_Eng_Run_Engmnt_Inhib** – 2096 If this parameter is turned on, then the engine must be running for the PTO to be engaged.
- **TEM_PTO_Air_Pres_Engmnt_Inhib** – 2097 If this parameter is turned on, the PTO cannot be engaged if the primary vehicle air pressure is below the programmable parameter set by TEM_PTO_Air_Pres_Engmnt_Limit.
- **TEM_PTO_Air_Pres_Engmnt_Limit** – 2098 This parameter sets the physical value for the Air Pressure Inhibit.
- **TEM_PTO_Mast_Swtch_Engmnt_Inhib** – 2099 If this parameter is turned on, then the PTO will not be engaged if the vehicle master switch is not ON.
- **ESC_PTO_Engaged_Param** – 2199 This parameter indicates the state that the Body Controller (BCM) will read as active for the TEM PTO feedback switch (as it goes into the BCM input). This active state will be used to indicate when the PTO is engaged:
  - 0 = Input active when open circuit
  - 1 = Input active when grounded
  - 2 = not used

- 3 = Input active when at 12V.

- **DISENGAGEMENT PARAMETERS**
  These parameters set the conditions under which the PTO will be disengaged.
- **TEM_PTO_Pk_Brake_Disengages** – 2108 If this parameter is turned on, then the PTO will be disengaged if the Park Brake is released.
- **TEM_PTO_Non_Neut_Disengages** – 2109 If this parameter is turned on, then the PTO will be disengaged if the transmission is taken out of neutral.
- **TEM_PTO_Veh_Spd_Disengages** – 2110 If this parameter is turned on, then the PTO will be disengaged if the vehicle speed is over the valued specified by TEM_PTO_Veh_Spd_DisEng_Limit.
- **TEM_PTO_Veh_Spd_DisEng_Limit** – 2111 This parameter sets the physical value for the Vehicle Speed disengagement.
- **TEM_PTO_Eng_Spd_Disengages** – 2112 If this parameter is turned on, then the PTO will be disengaged if the engine speed rises above the value set by TEM_PTO_Eng_Spd_DisEng_Limit.
- **TEM_PTO_Eng_Spd_DisEng_Limit** – 2113 This parameter sets the physical value for the Engine Speed disengagement.
- **TEM_PTO_Eng_Run_Disengages** – 2114 If this parameter is turned on, then the PTO will be disengaged if the engine is turned off.
- **TEM_PTO_Air_Pres_Disengages** – 2115 If this parameter is turned on, then the PTO will be disengaged if the primary air pressure is below the value set in TEM_PTO_Air_Pres_DisEng_Limit.
- **TEM_PTO_Air_Pres_DisEng_Limit** – 2116 This parameter sets the physical value for the Air Pressure disengagement.
- **TEM_PTO_Ext_Input_Disengages** – 2117 If this parameter is turned on, then the PTO will be disengaged if the external input designated for this purpose is active.
- **TEM_PTO_Mast_Swtch_Disengages** – 2118 If this parameter is turned on, then the PTO will be disengaged if the vehicle master switch is not ON.

- **Re-ENGAGEMENT PARAMETERS**
  These parameters set the conditions under which the PTO will be re-engaged due to a parameter disengagement.
- **TEM_PTO_Key_State_Allow_ReEng** – 2069 If this parameter is turned on, then the PTO will be allowed to reengage when the key state is returned to run.
- **TEM_PTO_Veh_Spd_Allow_ReEng** – 2119 If this parameter is turned on, then the PTO will be reengaged (after disengagement due to the vehicle being over the vehicle speed value) when the vehicle speed falls below TEM_PTO_Veh_Spd_Engmnt_Limit.

- **TEM_PTO_Eng_Spd_Allow_ReEng** – 2120 If this parameter is turned on, then the PTO will be reengaged (after disengagement due to engine overspeed) when the engine speed falls below TEM_PTO_Eng_Spd_Engmnt_Limit.
- **TEM_PTO_Ext_Input_Allow_ReEng** – 2121 If this parameter is turned on, then the PTO will be reengaged (after a disengage due to the designated external input being in active state) when the external input is no longer in active state.
- **TEM_PTO_Eng_Run_Allow_ReEng** – 2122 If this parameter is turned on, then the PTO will be reengaged (after disengagement due to engine stopping) when the engine is restarted.
- **TEM_PTO_Mast_Swtch_Allow_ReEng** – 2123 If is turned on, then the PTO will be reengaged after a disengage due to the master switch being turned off when the master switch is turned on again.
- **TEM_PTO_Air_Pres_Allow_ReEng** – 2124 If this parameter is turned on, then the PTO will be reengaged (after disengagement due to low air pressure) when the primary air pressure rises about the value specified by TEM_PTO_Air_Pres_Engmnt_Limit.
- **TEM_PTO_Non_Neut_Allow_ReEng** – 2148 If this parameter is turned on, then the PTO will be reengaged (after disengagement due to transmission out of neutral) when the transmission is placed back into neutral.
- **TEM_PTO_Pk_Brake_Allow_ReEng** – 2149 If this parameter is turned on, then the PTO will be reengaged (after disengagement due to park brake released) when the park brake is reapplied.
- **ALARM PARAMETERS**
  These parameters utilize the gauge cluster to sound an alarm to the driver when certain programmable parameters are violated.
- **TEM_PTO_Pk_Brake_Alarms** – 2131 If this parameter is turned on, then an audible alarm will sound in the cab if the PTO is engaged, and the park brake is released.
- **TEM_PTO_Non_Neut_Alarms** – 2132 If this parameter is turned on, then an audible alarm will sound in the cab if the PTO is engaged, and the transmission is taken out of neutral.
- **TEM_PTO_Veh_Spd_Alarms** – 2133 If this is turned on, then an audible alarm will sound if the PTO is engaged, and the vehicle speed is over the value set by TEM_PTO_Veh_Spd_Alarm_Limit
- **TEM_PTO_Veh_Spd_Alarm_Limit** – 2134 This parameter sets the physical value for the Vehicle Speed Alarm.
- **TEM_PTO_Eng_Spd_Alarms** – 2135 If this is turned on, then an alarm will sound if the PTO is engaged, and the engine speed is over the value set by TEM_PTO_Eng_Spd_Alarm_Limit
- **TEM_PTO_Eng_Spd_Alarm_Limit** – 2136 This parameter sets the physical value for the Engine Speed Alarm.

- **TEM_PTO_Eng_Run_Alarms** – 2137 If this parameter is turned on, then an audible alarm will sound in the cab if the PTO is engaged, and the engine is turned off.
- **TEM_PTO_Air_Pres_Alarms** – 2138 If this parameter is turned on, then an audible alarm will sound in the cab if the primary air pressure drops below the value specified by TEM_PTO_Air_Pres_Alarm_Limit.
- **TEM_PTO_Air_Pres_Alarm_Limit** – 2139 This parameter sets the physical value for the Air Pressure Alarm.
- **PTOb specific parameters**
- **ENGAGEMENT PARAMETERS PTOb**
- **TEM_PTOb_Brake_Engmnt_Inhib** – 2676 If this parameter is turned on, then the brake pedal must be depressed for PTOb to engage.
- **TEM_PTOb_Cltch_Engmnt_Inhib** – 2677 If this parameter is turned on, then the clutch pedal must be depressed for PTOb to engage.
- **TEM_PTOb_Eng_Run_Engmnt_Inhib** – 2678 If this parameter is turned on, then the engine must be running for PTOb to be engaged.
- **TEM_PTOb_Eng_Spd_Engmnt_Inhib** –2679 If this is parameter is turned on, then PTOb cannot be engaged if the engine speed is over a certain threshold, which is defined as a programmable parameter in TEM_PTOb_Eng_Spd_Engmnt_Limit.
- **TEM_PTOb_Eng_Spd_Engmnt_Limit** – 2680 This parameter sets the physical value for the Engine Speed Inhibit.
- **TEM_PTOb_Neut_Engmnt_Inhib** – 2681 If this parameter is turned on, then PTOb can only be engaged if the transmission is NOT in Neutral or Park**.**
- **TEM_PTOb_Non_Neut_Engmnt_Inhib** – 2682 If this parameter is turned on, then the transmission must be in Neutral or Park for PTOb to be engaged.
- **TEM_PTOb_PK_Brake_Engmnt_Inhib** – 2683 If this parameter is turned on, then the brake pedal must be depressed for PTOb to engage.
- **TEM_PTOb_Veh_Spd_Engmnt_Inhib** – 2684 If this parameter is turned on, then PTOb cannot be engaged if the vehicle speed is over the value prescribed by TEM_PTO_Veh_Spd_Engmnt_Limit.
- **TEM_PTOb_Veh_Spd_Engmnt_Limit** – 2685 This parameter sets the physical value for the Vehicle Speed Inhibit.
- **TEM_PTOb_Air_Pres_Engmnt_Inhib** – 2711 If this parameter is turned on, PTOb cannot be engaged if the primary vehicle air pressure is below the programmable parameter set by TEM_PTOb_Air_Pres_Engmnt_Limit.
- **TEM_PTOb_Air_Pres_Engmnt_Limit** – 2712 This parameter sets the physical value for the Air Pressure Inhibit for PTOb.
- **TEM_PTOb_Mast_Swtch_Engmnt_Inhib** – 2714 If this parameter is turned on, then PTOb will not be engaged if the vehicle master switch is not ON.
- **ESC_PTOb_Engaged_Param** – 3357 This parameter indicates the state that the Body Controller (BCM) will read as active for the TEM PTOb feedback switch (as

it goes into the BCM input). This active state will be used to indicate when PTOb is engaged:
  - 0 = Input active when open circuit
  - 1 = Input active when grounded
  - 2 = not used
  - 3 = Input active when at 12V.

- **DISENGAGEMENT PARAMETERS PTOb**
- **These parameters set the conditions under which PTOb will be disengaged.**
- **TEM_PTOb_Eng_Run_Disengages** – 2686 If this parameter is turned on, then PTOb will be disengaged if the engine is turned off.
- **TEM_PTOb_Eng_Spd_DisEng_Limit** – 2687 This parameter sets the physical value for the Engine Speed disengagement.
- **TEM_PTOb_Eng_Spd_Disengages** – 2688 If this parameter is turned on, then PTOb will be disengaged if the engine speed rises above the value set by TEM_PTOb_Eng_Spd_DisEng_Limit.
- **TEM_PTOb_Non_Neut_Disengages** – 2689 If this parameter is turned on, then PTOb will be disengaged if the transmission is taken out of neutral.
- **TEM_PTOb_Pk_Brake_Disengages** – 2690 If this parameter is turned on, then PTOb will be disengaged if the Park Brake is released.
- **TEM_PTOb_Veh_Spd_Disengages** – 2691 If this parameter is turned on, then PTOb will be disengaged if the vehicle speed is over the valued specified by TEM_PTOb_Veh_Spd_DisEng_Limit.
- **TEM_PTOb_Veh_Spd_DisEng_Limit** – 2692 This parameter sets the physical value for the Vehicle Speed disengagement.
- **TEM_PTOb_Mast_Swtch_Disengages** – 2718 If this parameter is turned on, then PTOb will be disengaged if the vehicle master switch is not ON.
- **TEM_PTOb_Air_Pres_Disengages** – 2716 If this parameter is turned on, then PTOb will be disengaged if the primary air pressure is below the value set in TEM_PTOb_Air_Pres_DisEng_Limit.
- **TEM_PTOb_Air_Pres_DisEng_Limit** – 2719 This parameter sets the physical value for the Air Pressure disengagement for PTOb.
- **TEM_PTOb_Ext_Input_Disengages** – 2772 If this parameter is turned on, then PTOb will be disengaged if the external input designated for this purpose is active.
- **Re-ENGAGEMENT PARAMETERS PTOb**
  These parameters set the conditions under which PTOb will be re-engaged due to a parameter disengagement.
- **TEM_PTOb_Eng_Run_Allow_ReEng** – 2693 If this parameter is turned on, then PTOb will be reengaged (after disengagement due to engine stopping) when the engine is restarted.

- **TEM_PTOb_Eng_Spd_Allow_ReEng** – 2694 If this parameter is turned on, then PTOb will be reengaged (after disengagement due to engine overspeed) when the engine speed falls below TEM_PTOb_Eng_Spd_Engmnt_Limit.
- **TEM_PTOb_Key_State_Allow_ReEng** – 2696 If this parameter is turned on, then PTOb will be allowed to reengage when the key state is returned to run.
- **TEM_PTOb_Non_Neut_Allow_ReEng** – 2697 If this parameter is turned on, then PTOb will be reengaged (after disengagement due to transmission out of neutral) when the transmission is placed back into neutral.
- **TEM_PTOb_Pk_Brake_Allow_ReEng** – 2698 If this parameter is turned on, then PTOb will be reengaged (after disengagement due to park brake released) when the park brake is reapplied.
- **TEM_PTOb_Veh_Spd_Allow_ReEng** – 2699 If this parameter is turned on, then PTOb will be reengaged (after disengagement due to the vehicle being over the vehicle speed value) when the vehicle speed falls below TEM_PTOb_Veh_Spd_Engmnt_Limit.
- **TEM_PTOb_Air_Pres_Allow_ReEng** – 2713 If this parameter is turned on, then PTOb will be reengaged (after disengagement due to low air pressure) when the primary air pressure rises about the value specified by TEM_PTO_Air_Pres_Engmnt_Limit.
- **TEM_PTOb_Mast_Swtch_Allow_ReEng** – 2715 If is turned on, then PTOb will be reengaged after a disengage due to the master switch being turned off when the master switch is turned on again.
- **TEM_PTOb_Ext_Input_Allow_ReEng** – 2771 If this parameter is turned on, then PTOb will be reengaged (after a disengage due to the designated external input being in active state) when the external input is no longer in active state.

- **ALARM PARAMETERS PTOb**

  These parameters utilize the gauge cluster to sound an alarm to the driver when certain programmable parameters are violated.
- **TEM_PTOb_Air_Pres_Alarms** – 2700 If this parameter is turned on, then an audible alarm will sound in the cab if the primary air pressure drops below the value specified by TEM_PTOb_Air_Pres_Alarm_Limit.
- **TEM_PTOb_Air_Pres_Alarm_Limit** – 2701 This parameter sets the physical value for the Air Pressure Alarm.
- **TEM_PTOb_Eng_Run_Alarms** – 2702 If this parameter is turned on, then an audible alarm will sound in the cab if PTOb is engaged, and the engine is turned off.
- **TEM_PTOb_Eng_Spd_Alarm_Limit** – 2703 This parameter sets the physical value for the Engine Speed Alarm.
- **TEM_PTOb_Eng_Spd_Alarms** – 2704 If this is turned on, then an alarm will sound if PTOb is engaged, and the engine speed is over the value set by

TEM_PTOb_Eng_Spd_Alarm_Limit

- **TEM_PTOb_Non_Neut_Alarms** – 2705 If this parameter is turned on, then an audible alarm will sound in the cab if PTOb is engaged, and the transmission is taken out of neutral.
- **TEM_PTOb_Pk_Brake_Alarms** – 2706 If this parameter is turned on, then an audible alarm will sound in the cab if PTOb is engaged, and the park brake is released.
- **TEM_PTOb_Veh_Spd_Alarms** – 2708 If this is turned on, then an audible alarm will sound if PTOb is engaged, and the vehicle speed is over the value set by TEM_PTOb_Veh_Spd_Alarm_Limit
- **TEM_PTOb_Veh_Spd_Alarm_Limit** – 2709 This parameter sets the physical value for PTOb Vehicle Speed Alarm.

Note/s About Possible Software Feature Conflicts:
Only one PTO feature is allowed with 597200.
597307 conflicts with 597132, 597264, 597277, 597278, 597280, 597281, 597304, 597306.
597283 conflicts with 597279
597279 conflicts with 597306

Parts Associated with This Feature:

PART NUMBER	DESCRIPTION
MULTIPLEX SWITCH-PACK PARTS	
4057689C1	HOUSING, SWITCH 6-PACK DIN MULTIPLEX
4102438C1	SWITCH, PTO #1
4102439C1	SWITCH, PTO #2
AIR SOLENOID 4-PACK PARTS	
2506711C91	KIT AIR UNIVERSAL SOLENOID (NORMALLY CLOSED)
2505594C1	4-PACK AIR SOLENOID BASE
1661375C2	4-PACK AIR SOLENOID BASE 5-CAVITY CONNECTOR
1661376C1	4-PACK AIR SOLENOID BASE 5-CAVITY CONNECTOR LOCK
2033816C1	4-PACK AIR SOLENOID WIRE TERMINAL 14-GAUGE
2033819C1	4-PACK AIR SOLENOID WIRE TERMINAL 18-GAUGE
0589391C1	4-PACK AIR SOLENOID WIRE TERMINAL SEAL 14-GAUGE
2607909C1	4-PACK AIR SOLENOID WIRE TERMINAL SEAL 18-GAUGE
76-WAY CONNECTOR (THERMAL PROTECTION BARRIER PASS THROUGH)	
3574285C1	76-WAY CONNECTOR WIRE TERMINAL FEMALE 14-GUAGE
3574288C1	76-WAY CONNECTOR WIRE TERMINAL FEMALE 16-GUAGE
2003343C1	76-WAY CONNECTOR WIRE TERMINAL FEMALE 18-GUAGE
3549416C1	76-WAY CONNECTOR WIRE TERMINAL MALE 14-GUAGE
3549417C1	76-WAY CONNECTOR WIRE TERMINAL MALE 16-GUAGE
3549418C1	76-WAY CONNECTOR WIRE TERMINAL MALE 18-GUAGE
BODY CONTROL MODULE J5/J6 CONNECTOR PARTS	
3522073C1	32-WAY BODY CONTROLLER J5 (1601/1602) CONNECTOR WIRE TERMINAL 18/20-GAUGE
3534303C1	32-WAY BODY CONTROLLER J5 (1601/1602) CONNECTOR WIRE TERMINAL 20/22-GAUGE
3544878C1	18-WAY BODY CONTROLLER J6 (1606/2023) CONNECTOR WIRE TERMINAL 12-14-GAUGE [GT280]
3544877C1	18-WAY BODY CONTROLLER J6 (1606/2023) CONNECTOR WIRE TERMINAL 14/16-GAUGE [GT280]

3544876C1	18-WAY BODY CONTROLLER J6 (1606/2023) CONNECTOR WIRE TERMINAL 16/18-GAUGE [GT280]
3544875C1	18-WAY BODY CONTROLLER J6 (1606/2023) CONNECTOR WIRE TERMINAL 18/20-GAUGE [GT280]
3544884C1	18-WAY BODY CONTROLLER J6 (1606/2023) CONNECTOR WIRE TERMINAL 16/18-GAUGE [GT150]
3544883C1	18-WAY BODY CONTROLLER J6 (1606/2023) CONNECTOR WIRE TERMINAL 20/22-GAUGE [GT150]

Parts Associated with Feature

How to Test This Feature:
1. Depress the In-cab PTO switch to the ON position.
2. Verify that all enabled interlock conditions are met per programmed parameters using Diamond Logic Builder software.
3. Verify that the International-provided air solenoid is supplying air pressure at the solenoid output utilizing Diamond Logic Builder software.

Note: This feature uses body controller-based software controls which can be diagnosed with the International® Diamond Logic® Builder software (see local dealer if not owned).

References:
Refer to the applicable International® Circuit Diagrams and Service Manuals.

33.3. 13XAA : PTO CONTROL, DASH MOUNTED for Customer Provided PTO; Includes Switch, Electric/Air Solenoid, Piping and Wiring

Note: Not compatible with T14 Transmission

Description: This feature provides the customer with the ability to control a customer-supplied PTO with one 2-position latched switch located in the instrument panel and one air solenoid. This feature provides all the software and wiring to the air solenoid located inside the driver's side frame rail next to the transmission. Customer must supply and route air plumbing to the PTO. Programmable parameters allow customers to customize the functionality of their PTO.

The programming for this feature, as built at the factory, varies depending on the truck model and the transmission provided.

33.3.1. 13XAA PTO CONTROL, DASH MOUNTED for Customer Provided PTO; Includes Switch, Electric/Air Solenoid, Piping and Wiring

Note: Not compatible with T14 Transmission

Feature Applicability to Vehicle Platforms:

- Heavy Vocational (HV)
- Medium Vocational (MV)
- Heavy Extreme (HX) 2021 and Newer

Extended Description: This feature provides the customer with the ability to control a customer-supplied PTO with one 2-position latched switch located in the instrument panel and one air solenoid. This feature provides all the software and wiring to the air solenoid located inside the driver's side frame rail next to the transmission. Customers must supply and route air plumbing to the PTO. Programmable parameters allow customers to customize the functionality of their PTO.

System Block Diagram:

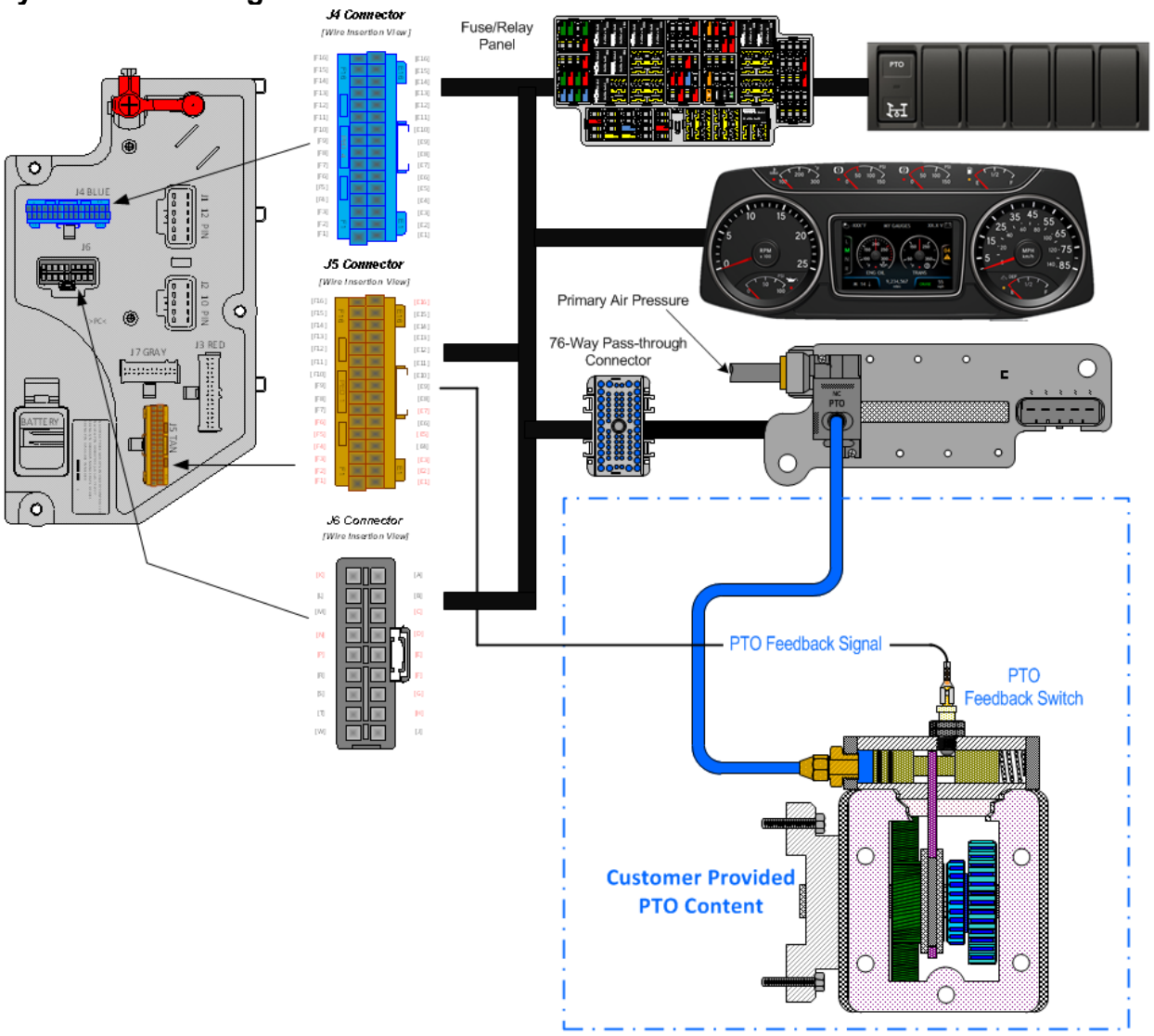

Note: It is important to ensure the Power Take Off (PTO) internal shift mechanism has adequate pneumatic potential communication for the full engagement of the PTO coupling/decoupling mechanism. Full engagement is typically a function of the available pneumatic potential sourced from the chassis primary air pressure supply system which [can] limit the full power transmission capabilities of the PTO coupling and decoupling mechanism/s.

Body Controller Software Feature Codes:

- 597200 - BCM PROG, **PTO CONTROL LOGIC for Dash Switch**
- 597278 - BCM PROG, **PTO SHIFT**
- 597132 - BCM PROG, **TRANSMISSION PTO Single**

- 597133 - BCM PROG, **TRANSMISSION PTO Dual**
- 597306 - BCM PROG, **TRANSMISSION PTO Dual PTO, with 42 Parameters**
- 597312 - BCM PROG, **TRANSMISSION PTO Single PTO, with 42 Parameters**

Note: if Eaton® Procision™ or Endurant™ Transmission is being used add:

- **597276 – BCM PROG, PTO ENABLER J1939 Engagement Consent for Eaton® Procision™ and Endurant™**

Body Controller Software Feature Code Parameters:

Parameter	ID	Description	Default	Units	Min	Max	Step
On – Indicates a 1 is set for the parameter							
Off – Indicates a 0 is set in for this parameter							
ENGAGEMENT PARAMETERS							
TEM_PTO_PK_Brake_Engmnt_Inhib	2087	If this Parameter is 1, the PTO will not be engaged if the Park Brake is not set.	OFF	N/A	N/A	N/A	N/A
TEM_PTO_Non_Neut_Engmnt_Inhib	2088	If this Parameter is 1, the PTO will not be engaged if the Transmission is not in Neutral or Park	OFF	N/A	N/A	N/A	N/A
TEM_PTO_Neut_Engmnt_Inhib	2089	If this Parameter is 1, the PTO will only be engaged if the Transmission is not in Neutral or Park	OFF	N/A	N/A	N/A	N/A
TEM_PTO_Veh_Spd_Engmnt_Inhib	2090	If this Parameter is 1, the PTO will not be engaged if the vehicle speed is over the value set in TEM_PTO_Veh_Spd_Engmnt_Limit	ON	N/A	N/A	N/A	N/A
TEM_PTO_Veh_Spd_Engmnt_Limit	2091	See TEM_PTO_Veh_Spd_Engmnt_Inhib	3.00	MPH	1	100	1
TEM_PTO_Eng_Spd_Engmnt_Inhib	2092	If this Parameter is 1, the PTO will not be engaged if the engine speed is over the value set in TEM_PTO_Eng_Spd_Engmnt_Limit	ON	N/A	N/A	N/A	N/A
TEM_PTO_Eng_Spd_Engmnt_Limit	2093	See TEM_PTO_Eng_Spd_Engmnt_Inhib	1000	RPM	100	5000	0.1
TEM_PTO_Cltch_Engmnt_Inhib	2094	If this Parameter is 1, the PTO will not be engaged if the clutch pedal is not depressed	OFF	N/A	N/A	N/A	N/A
TEM_PTO_Brake_Engmnt_Inhib	2095	If this Parameter is 1, the PTO will not be engaged if the brake pedal is not depressed	OFF	N/A	N/A	N/A	N/A
TEM_PTO_Eng_Run_Engmnt_Inhib	2096	If this Parameter is 1, the PTO will not be engaged if the engine is not running	OFF	N/A	N/A	N/A	N/A
TEM_PTO_Air_Pres_Engmnt_Inhib	2097	If this Parameter is 1, the PTO will not be engaged if the primary vehicle air pressure is below TEM_PTO_Air_Pres_Engmnt_Limit	OFF	N/A	N/A	N/A	N/A
TEM_PTO_Air_Pres_Engmnt_Limit	2098	See TEM_PTO_Air_Pres_Engmnt_Inhib	90	PSI	1	500	1
TEM_PTO_Mast_Swtch_Engmnt_Inhib	2099	If this Parameter is 1, the PTO will not be engaged if the vehicle master switch is not ON.	OFF	N/A	N/A	N/A	N/A
DISENGAGEMENT PARAMETERS							

TEM_PTO_Pk_Brake_Disengages	2108	if this Parameter is 1, the PTO will be disengaged if the Park Brake is released	OFF	N/A	N/A	N/A	N/A
TEM_PTO_Non_Neut_Disengages	2109	if this Parameter is 1, the PTO will be disengaged if the transmission is taken out of neutral	OFF	N/A	N/A	N/A	N/A
TEM_PTO_Veh_Spd_Disengages	2110	if this Parameter is 1, the PTO will be disengaged if the vehicle speed is over the value set in TEM_PTO_Veh_Spd_DisEng_Limit	OFF	N/A	N/A	N/A	N/A
TEM_PTO_Veh_Spd_DisEng_Limit	2111	see TEM_PTO_Veh_Spd_Disengages	3	MPH	3	100	1
TEM_PTO_Eng_Spd_Disengages	2112	if this Parameter is 1, the PTO will be disengaged if the vehicle speed is over the value set in TEM_PTO_Eng_Spd_DisEng_Limit	ON	N/A	N/A	N/A	N/A
TEM_PTO_Eng_Spd_DisEng_Limit	2113	see TEM_PTO_Eng_Spd_Disengages	1800	RPM	0	5000	1
TEM_PTO_Eng_Run_Disengages	2114	If this Parameter is 1, the PTO will be disengaged if the engine is turned off	OFF	N/A	N/A	N/A	N/A
TEM_PTO_Air_Pres_Disengages	2115	if this Parameter is 1, the PTO will be disengaged if the primary air pressure is below the value set in TEM_PTO_Air_Pres_DisEng_Limit	OFF	N/A	N/A	N/A	N/A
TEM_PTO_Air_Pres_DisEng_Limit	2116	see TEM_PTO_Air_Pres_Disengages	80	PSI	0	500	1
TEM_PTO_Ext_Input_Disengages	2117	if this Parameter is 1, the PTO will be disengaged if the external input designated for this purpose is active	OFF	N/A	N/A	N/A	N/A
TEM_PTO_Mast_Swtch_Disengages	2118	if this Parameter is 1, the PTO will be disengaged if the vehicle master switch is not ON	OFF	N/A	N/A	N/A	N/A
RE-ENGAGEMENT PARAMETERS							
TEM_PTO_Key_State_Allow_ReEng	2069	If this parameter is set, the PTO will be allowed to reengage when the key state is returned to run.	OFF	N/A	N/A	N/A	N/A
TEM_PTO_Veh_Spd_Allow_ReEng	2119	if this Parameter is 1, the PTO will be reengaged after a disengage due to vehicle overspeed when the vehicle speed is below TEM_PTO_Veh_Spd_Engmnt_Limit	OFF	N/A	N/A	N/A	N/A
TEM_PTO_Eng_Spd_Allow_ReEng	2120	if this Parameter is 1, the PTO will be reengaged after a disengage due to engine overspeed when the engine speed is below TEM_PTO_Eng_Spd_Engmnt_Limit	ON	N/A	N/A	N/A	N/A
TEM_PTO_Ext_Input_Allow_ReEng	2121	if this Parameter is 1, the PTO will be reengaged after a disengage due to the designated external input when the external input is no longer active	OFF	N/A	N/A	N/A	N/A
TEM_PTO_Eng_Run_Allow_ReEng	2122	if this Parameter is 1, the PTO will be reengaged after a disengage due to the engine stopping when the engine is restarted	OFF	N/A	N/A	N/A	N/A
TEM_PTO_Mast_Swtch_Allow_ReEng	2123	if this Parameter is 1, the PTO will be reengaged after a disengage due to the master switch being turned off	OFF	N/A	N/A	N/A	N/A

		when the master switch is turned on again					
TEM_PTO_Air_Pres_Allow_ReEng	2124	if this Parameter is 1, the PTO will be reengaged after a disengage due to low vehicle air pressure when the primary air pressure is over TEM_PTO_Air_Pres_Engmnt_Limit	OFF	N/A	N/A	N/A	N/A
TEM_PTO_Non_Neut_Allow_ReEng	2148	if this Parameter is 1, the PTO will be reengaged after a disengage due to transmission out of neutral when the transmission is placed back into neutral.	OFF	N/A	N/A	N/A	N/A
TEM_PTO_Pk_Brake_Allow_ReEng	2149	if this Parameter is 1, the PTO will be reengaged after a disengage due to park brake released when the park brake is reapplied.	OFF	N/A	N/A	N/A	N/A
ALARMS PARAMETERS							
TEM_PTO_Pk_Brake_Alarms	2131	if this Parameter is 1, an alarm will sound if the PTO is engaged, and the park brake is released	OFF	N/A	N/A	N/A	N/A
TEM_PTO_Non_Neut_Alarms	2132	if this Parameter is 1, an alarm will sound if the PTO is engaged, and transmission is taken out of neutral	OFF	N/A	N/A	N/A	N/A
TEM_PTO_Eng_Run_Alarms	2137	if this Parameter is 1, an alarm will sound if the PTO is engaged, and the engine is turned off	OFF	N/A	N/A	N/A	N/A

Parameter Definitions:

- **ENGAGEMENT PARAMETERS**

  These parameters set rules that must be met for the PTO to be engaged.

In Example:

If TEM_PTO_Air_Pres_Engmnt_Inhib parameter is turned on, the PTO cannot be engaged if the primary vehicle air pressure is below the programmable parameter set by TEM_PTO_Air_Pres_Engmnt_Limit. **for Dash Switch**

- **TEM_PTO_PK_Brake_Engmnt_Inhib** – If this parameter is turned on, then the brake pedal must be depressed for the PTO to engage.
- **TEM_PTO_Non_Neut_Engmnt_Inhib** – If this parameter is turned on, then the transmission must be in Neutral or Park for the PTO to be engaged.
- **TEM_PTO_Neut_Engmnt_Inhib** – If this parameter is turned on, then the PTO can only be engaged if the transmission is NOT in Neutral or Park.
- **TEM_PTO_Veh_Spd_Engmnt_Inhib** – If this parameter is turned on, then the PTO cannot be engaged if the vehicle speed is over the value prescribed by TEM_PTO_Veh_Spd_Engmnt_Limit.
- **TEM_PTO_Veh_Spd_Engmnt_Limit** – This parameter sets the physical value for the Vehicle Speed Inhibit.
- **TEM_PTO_Eng_Spd_Engmnt_Inhib** – If this is parameter is turned on, then the PTO cannot be engaged if the engine speed is over a certain threshold, which is defined as a programmable parameter in TEM_PTO_Eng_Spd_Engmnt_Limit.

- **TEM_PTO_Eng_Spd_Engmnt_Limit** – This parameter sets the physical value for the Engine Speed Inhibit.
- **TEM_PTO_Cltch_Engmnt_Inhib** – If this parameter is turned on, then the clutch pedal must be depressed for the PTO to engage.
- **TEM_PTO_Brake_Engmnt_Inhib** – If this parameter is turned on, then the brake pedal must be depressed for the PTO to engage.
- **TEM_PTO_Eng_Run_Engmnt_Inhib** – If this parameter is turned on, then the engine must be running for the PTO to be engaged.
- **TEM_PTO_Air_Pres_Engmnt_Inhib** – If this parameter is turned on, the PTO cannot be engaged if the primary vehicle air pressure is below the programmable parameter set by TEM_PTO_Air_Pres_Engmnt_Limit.
- **TEM_PTO_Air_Pres_Engmnt_Limit** – This parameter sets the physical value for the Air Pressure Inhibit.
- **TEM_PTO_Mast_Swtch_Engmnt_Inhib** – If this parameter is turned on, then the PTO will not be engaged if the vehicle master switch is not ON.
- **DISENGAGEMENT PARAMETERS**
  These parameters set the conditions under which the PTO will be disengaged.
- **TEM_PTO_Pk_Brake_Disengages** – If this parameter is turned on, then the PTO will be disengaged if the Park Brake is released.
- **TEM_PTO_Non_Neut_Disengages** – If this parameter is turned on, then the PTO will be disengaged if the transmission is taken out of neutral.
- **TEM_PTO_Veh_Spd_Disengages** – If this parameter is turned on, then the PTO will be disengaged if the vehicle speed is over the valued specified by TEM_PTO_Veh_Spd_DisEng_Limit.
- **TEM_PTO_Veh_Spd_DisEng_Limit** – This parameter sets the physical value for the Vehicle Speed disengagement.
- **TEM_PTO_Eng_Spd_Disengages** – If this parameter is turned on, then the PTO will be disengaged if the engine speed rises above the value set by TEM_PTO_Eng_Spd_DisEng_Limit.
- **TEM_PTO_Eng_Spd_DisEng_Limit** – This parameter sets the physical value for the Engine Speed disengagement.
- **TEM_PTO_Eng_Run_Disengages** – If this parameter is turned on, then the PTO will be disengaged if the engine is turned off.
- **TEM_PTO_Air_Pres_Disengages** – If this parameter is turned on, then the PTO will be disengaged if the primary air pressure is below the value set in TEM_PTO_Air_Pres_DisEng_Limit,
- **TEM_PTO_Air_Pres_DisEng_Limit** – This parameter sets the physical value for the Air Pressure disengagement.
- **TEM_PTO_Ext_Input_Disengages** – If this parameter is turned on, then the PTO will be disengaged if the external input designated for this purpose is active.

- **TEM_PTO_Mast_Swtch_Disengages** – If this parameter is turned on, then the PTO will be disengaged if the vehicle master switch is not ON.
- **Re-ENGAGEMENT PARAMETERS**
  These parameters set the conditions under which the PTO will be re-engaged due to a parameter disengagement.
- **TEM_PTO_Key_State_Allow_ReEng** – If this parameter is turned on, then the PTO will be allowed to reengage when the key state is returned to run.
- **TEM_PTO_Veh_Spd_Allow_ReEng** – If this parameter is turned on, then the PTO will be reengaged (after disengagement due to the vehicle being over the vehicle speed value) when the vehicle speed falls below TEM_PTO_Veh_Spd_Engmnt_Limit.
- **TEM_PTO_Eng_Spd_Allow_ReEng** – If this parameter is turned on, then the PTO will be reengaged (after disengagement due to engine overspeed) when the engine speed falls below TEM_PTO_Eng_Spd_Engmnt_Limit.
- **TEM_PTO_Ext_Input_Allow_ReEng** – If this parameter is turned on, then the PTO will be reengaged (after a disengage due to the designated external input being in active state) when the external input is no longer in active state.
- **TEM_PTO_Eng_Run_Allow_ReEng** – If this parameter is turned on, then the PTO will be reengaged (after disengagement due to engine stopping) when the engine is restarted.
- **TEM_PTO_Mast_Swtch_Allow_ReEng** – If is turned on, then the PTO will be reengaged after a disengage due to the master switch being turned off when the master switch is turned on again.
- **TEM_PTO_Air_Pres_Allow_ReEng** – If this parameter is turned on, then the PTO will be reengaged (after disengagement due to low air pressure) when the primary air pressure rises about the value specified by TEM_PTO_Air_Pres_Engmnt_Limit.
- **TEM_PTO_Non_Neut_Allow_ReEng** – If this parameter is turned on, then the PTO will be reengaged (after disengagement due to transmission out of neutral) when the transmission is placed back into neutral.
- **TEM_PTO_Pk_Brake_Allow_ReEng** – If this parameter is turned on, then the PTO will be reengaged (after disengagement due to park brake released) when the park brake is reapplied.
- **ALARM PARAMETERS**
  These parameters utilize the gauge cluster to sound an alarm to the driver when certain programmable parameters are violated.
- **TEM_PTO_Pk_Brake_Alarms** – If this parameter is turned on, then an audible alarm will sound in the cab if the PTO is engaged, and the park brake is released.

- **TEM_PTO_Non_Neut_Alarms** – If this parameter is turned on, then an audible alarm will sound in the cab if the PTO is engaged, and the transmission is taken out of neutral.
- **TEM_PTO_Eng_Run_Alarms** – If this parameter is turned on, then an audible alarm will sound in the cab if the PTO is engaged, and the engine is turned off.

Note/s About Possible Software Feature Conflicts:
Only one PTO feature is allowed with 597200. 597278 will conflict with 597264, 597277, 597280, 597281, 597304.

Parts Associated with This Feature:

PART NUMBER	DESCRIPTION
MULTIPLEX SWITCH-PACK PARTS	
4057689C1	HOUSING, SWITCH 6-PACK DIN MULTIPLEX
4102418C1	SWITCH, PTO 2-POSITION LATCHING
AIR SOLENOID 4-PACK PARTS	
2506711C91	KIT AIR UNIVERSAL SOLENOID (NORMALLY CLOSED)
2505594C1	4-PACK AIR SOLENOID BASE
1661375C2	4-PACK AIR SOLENOID BASE 5-CAVITY CONNECTOR
1661376C1	4-PACK AIR SOLENOID BASE 5-CAVITY CONNECTOR LOCK
2033816C1	4-PACK AIR SOLENOID WIRE TERMINAL 14-GAUGE
2033819C1	4-PACK AIR SOLENOID WIRE TERMINAL 18-GAUGE
0589391C1	4-PACK AIR SOLENOID WIRE TERMINAL SEAL 14-GAUGE
2607909C1	4-PACK AIR SOLENOID WIRE TERMINAL SEAL 18-GAUGE
76-WAY CONNECTOR (THERMAL PROTECTION BARRIER PASS THROUGH)	
3574285C1	76-WAY CONNECTOR WIRE TERMINAL FEMALE 14-GUAGE
3574288C1	76-WAY CONNECTOR WIRE TERMINAL FEMALE 16-GUAGE
2003343C1	76-WAY CONNECTOR WIRE TERMINAL FEMALE 18-GUAGE
3549416C1	76-WAY CONNECTOR WIRE TERMINAL MALE 14-GUAGE
3549417C1	76-WAY CONNECTOR WIRE TERMINAL MALE 16-GUAGE
3549418C1	76-WAY CONNECTOR WIRE TERMINAL MALE 18-GUAGE
BODY CONTROL MODULE J5 CONNECTOR PARTS	
3522073C1	32-WAY BODY CONTROLLER J5 (1601/1602) CONNECTOR WIRE TERMINAL 18/20-GAUGE
3534303C1	32-WAY BODY CONTROLLER J5 (1601/1602) CONNECTOR WIRE TERMINAL 20/22-GAUGE

Part Numbers Associate with Feature

How to Test This Feature:
1. Depress the In-cab PTO switch to the ON position.

2. Verify that all enabled interlock conditions are met per programmed parameters using Diamond Logic Builder software.
3. Verify that the International-provided air solenoid is supplying air pressure at the solenoid output utilizing Diamond Logic Builder software.

Note: This feature uses body controller-based software controls which can be diagnosed with The International® Diamond Logic® Builder software (see local dealer if not owned).

References:
Refer to the applicable International® Circuit Diagrams and Service Manuals.

33.3.2. 13XAA PTO CONTROL, DASH MOUNTED for Customer Provided PTO; Includes 1- Illuminated Switch, 1-Electric/Air Solenoid, Piping and Wiring.

Note: Not compatible with T14 Transmission

Feature Applicability to Vehicle Platforms:
- Line Haul Transport (LT)
- Regional Haul (RH)
- Heavy Extreme (HX) 2021 and Newer

Extended Description: This feature provides the customer with the ability to control one customer-supplied PTO with one in-dash switch and one air solenoid. This feature provides all the software and wiring to the air solenoids located inside the driver's side frame rail next to the transmission. Customers must supply and route air plumbing to the PTO. Programmable parameters allow customers to customize the functionality of their PTO.

System Block Diagram:

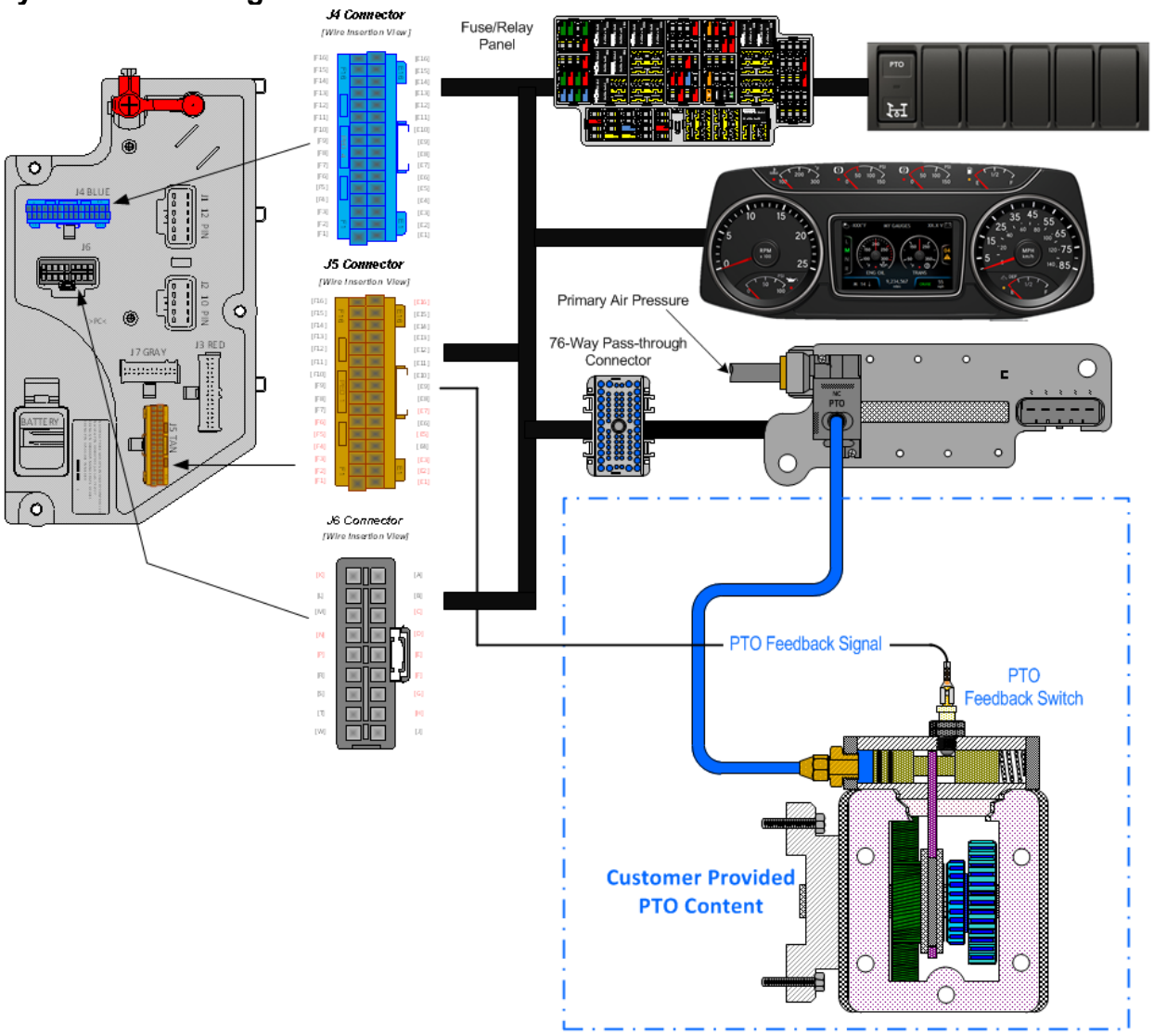

Note: It is important to ensure the Power Take Off (PTO) internal shift mechanism has adequate pneumatic potential communication for the full engagement of the PTO coupling/decoupling mechanism. Full engagement is typically a function of the available pneumatic potential sourced from the chassis primary air pressure supply system which [can] limit the full power transmission capabilities of the PTO coupling and decoupling mechanism/s.

Body Controller Software Feature Codes:

- 597132 - BCM PROG, **TRANSMISSION PTO Single**
- 597312 - BCM PROG, **TRANSMISSION PTO Single PTO, with 42 Parameters**

Note: if Eaton® Procision™ or Endurant™ Transmission is being used, add:

- **597276 – BCM PROG, PTO ENABLER J1939 Engagement Consent for Eaton® Procision™ and Endurant™**

Body Controller Software Feature Code Parameters:

All Parameters below are exclusive to 597132							
On – Indicates a 1 is set for the parameter							
Off – Indicates a 0 is set in for this parameter							
Parameter	**ID**	**Description**	**Default**	**Units**	**Min**	**Max**	**Step**
PTOa_Vehicle_Speed_Enable	2242	Set to 0 to ignore the vehicle speed. Set to 1 to require the vehicle to be below a specified vehicle speed for the PTO to engage. Please use PTOa_Vehicle_Speed_Range to specify the appropriate vehicle speed if this parameter is set to 1.	ON	N/A	N/A	N/A	N/A
PTOa_Engine_Speed_Enable	2243	Set to 0 to ignore the engine speed. Set to 1 to require the vehicle to be below a specified engine speed for the PTO to be engaged. Please use PTOa_Engine_Speed_Range to specify the appropriate engine speed if this parameter is set to 1.	OFF	N/A	N/A	N/A	N/A
PTOa_Engine_Speed_Alarm_Enable	2244	Set to 0 to not have an alarm based on engine speed. Set to 1 to have a speed that an alarm will sound when the PTO is engaged, and the engine speed is greater than the set value. Please use PTOa_Engine_Speed_Alarm_Range to specify the appropriate engine speed if this parameter is set to 1.	OFF	N/A	N/A	N/A	N/A
PTOa_Vehicle_Speed_Alarm_Enable	2267	Set to 0 to not have an alarm based on vehicle speed. Set to 1 to have a speed limit that an alarm will sound when the PTO is engaged, and the vehicle speed is greater than the set value. Please use PTOa_Vehicle_Speed_Alarm_Range to specify the appropriate vehicle speed if this parameter is set to 1.	OFF	N/A	N/A	N/A	N/A
PTOa_Clutch_Pedal	2333	Set to 0 to ignore the clutch pedal or if the vehicle does not have a clutch pedal. Set to 1 to ensure that the clutch pedal is depressed for engagement.	OFF	N/A	N/A	N/A	N/A
PTOa_Engine_Running	2334	Set to 0 to ignore the engine. Set to 1 to ensure that the engine is running to engage and disengage if the engine stops running.	ON	N/A	N/A	N/A	N/A
PTOa_Engine_Speed_Range	2336	Set to a speed that the engine must be below for the PTO to engage. The PTO will disengage if the	300	RPM	300	3000	10

		engine speed becomes greater than the set value. If engine speed is required for PTO operation, please use PTOa_Engine_Speed_Enable to enable this interlock.					
PTOa_Park_Brake	2338	Set to 0 to ignore the park brake. Set to 1 to ensure that the park brake is set for engage and disengage if the park brake is released.	ON	N/A	N/A	N/A	N/A
PTOa_Vehicle_Speed_Range	2339	Set to the speed that the vehicle must be below for the PTO to engage. The PTO will disengage if the vehicle speed becomes greater than the set value. If vehicle speed is required for PTO operation, please use PTOa_Vehicle_Speed_Enable parameter to enable this interlock.	3.00	MPH	1	100	1
PTOa_Engine_Speed_Alarm_Range	2340	Set to a speed that an alarm will sound when the PTO is engaged, and the engine speed is greater than the set value. If an engine speed alarm is required for PTO operation, please use PTOa_Engine_Speed_Alarm_Enable parameter to enable this alarm.	300	RPM	300	3000	10
PTOa_Vehicle_Speed_Alarm_Range	2342	Set to a speed limit that an alarm will sound when the PTO is engaged, and the vehicle speed is greater than the set value. If the vehicle alarm is required for PTO operation, please use PTOa_Vehicle_Speed_Alarm_Enable to enable this alarm.	3.00	MPH	1	100	1
PTOa_Transmission_Neutral	2355	NOTE, this parameter will only work for vehicles with automated manual transmissions. Set to 0 to ignore the transmission state. Set to 1 to ensure that the transmission is in neutral for engagement.	OFF	N/A	N/A	N/A	N/A

All Parameters below are exclusive to 597312

On – Indicates a 1 is set for the parameter

Off – Indicates a 0 is set in for this parameter

Parameters 2069-2149 all apply to PTO

Parameter	ID	Description	Default	Units	Min	Max	Step
ENGAGEMENT PARAMETERS							
TEM_PTO_PK_Brake_Engmnt_Inhib	2087	If this Parameter is 1, the PTO will not be engaged if the Park Brake is not set.	OFF	N/A	N/A	N/A	N/A

TEM_PTO_Non_Neut_Engmnt_Inhib	2088	If this Parameter is 1, the PTO will not be engaged if the Transmission is not in Neutral or Park	OFF	N/A	N/A	N/A	N/A
TEM_PTO_Neut_Engmnt_Inhib	2089	If this Parameter is 1, the PTO will only be engaged if the Transmission is not in Neutral or Park	OFF	N/A	N/A	N/A	N/A
TEM_PTO_Veh_Spd_Engmnt_Inhib	2090	If this Parameter is 1, the PTO will not be engaged if the vehicle speed is over the value set in TEM_PTO_Veh_Spd_Engmnt_Limit	ON	N/A	N/A	N/A	N/A
TEM_PTO_Veh_Spd_Engmnt_Limit	2091	See TEM_PTO_Veh_Spd_Engmnt_Inhib	3.00	MPH	1	100	1
TEM_PTO_Eng_Spd_Engmnt_Inhib	2092	If this Parameter is 1, the PTO will not be engaged if the engine speed is over the value set in TEM_PTO_Eng_Spd_Engmnt_Limit	ON	N/A	N/A	N/A	N/A
TEM_PTO_Eng_Spd_Engmnt_Limit	2093	See TEM_PTO_Eng_Spd_Engmnt_Inhib	1000	RPM	100	5000	0.1
TEM_PTO_Cltch_Engmnt_Inhib	2094	If this Parameter is 1, the PTO will not be engaged if the clutch pedal is not depressed	OFF	N/A	N/A	N/A	N/A
TEM_PTO_Brake_Engmnt_Inhib	2095	If this Parameter is 1, the PTO will not be engaged if the brake pedal is not depressed	OFF	N/A	N/A	N/A	N/A
TEM_PTO_Eng_Run_Engmnt_Inhib	2096	If this Parameter is 1, the PTO will not be engaged if the engine is not running	ON	N/A	N/A	N/A	N/A
TEM_PTO_Air_Pres_Engmnt_Inhib	2097	If this Parameter is 1, the PTO will not be engaged if the primary vehicle air pressure is below TEM_PTO_Air_Pres_Engmnt_Limit	ON	N/A	N/A	N/A	N/A
TEM_PTO_Air_Pres_Engmnt_Limit	2098	See TEM_PTO_Air_Pres_Engmnt_Inhib	90	PSI	1	500	1
TEM_PTO_Mast_Swtch_Engmnt_Inhib	2099	If this Parameter is 1, the PTO will not be engaged if the vehicle master switch is not ON.	OFF	N/A	N/A	N/A	N/A
ESC_PTO_Engaged_Param	2199	Active State for the PTO engagement feedback switch.	1	No Units	0	3	1
DISENGAGEMENT PARAMETERS							
TEM_PTO_Pk_Brake_Disengages	2108	if this Parameter is 1, the PTO will be disengaged if the Park Brake is released	OFF	N/A	N/A	N/A	N/A
TEM_PTO_Non_Neut_Disengages	2109	if this Parameter is 1, the PTO will be disengaged if the transmission is taken out of neutral	OFF	N/A	N/A	N/A	N/A
TEM_PTO_Veh_Spd_Disengages	2110	if this Parameter is 1, the PTO will be disengaged if the vehicle speed is over the value set in TEM_PTO_Veh_Spd_DisEng_Limit	OFF	N/A	N/A	N/A	N/A
TEM_PTO_Veh_Spd_DisEng_Limit	2111	see TEM_PTO_Veh_Spd_Disengages	3	MPH	3	100	1
TEM_PTO_Eng_Spd_Disengages	2112	if this Parameter is 1, the PTO will be disengaged if the vehicle speed is over the value set in TEM_PTO_Eng_Spd_DisEng_Limit	OFF	N/A	N/A	N/A	N/A
TEM_PTO_Eng_Spd_DisEng_Limit	2113	see TEM_PTO_Eng_Spd_Disengages	2000	RPM	0	5000	1

TEM_PTO_Eng_Run_Disengages	2114	If this Parameter is 1, the PTO will be disengaged if the engine is turned off	ON	N/A	N/A	N/A	N/A
TEM_PTO_Air_Pres_Disengages	2115	if this Parameter is 1, the PTO will be disengaged if the primary air pressure is below the value set in TEM_PTO_Air_Pres_DisEng_Limit	ON	N/A	N/A	N/A	N/A
TEM_PTO_Air_Pres_DisEng_Limit	2116	see TEM_PTO_Air_Pres_Disengages	80	PSI	0	500	1
TEM_PTO_Ext_Input_Disengages	2117	if this Parameter is 1, the PTO will be disengaged if the external input designated for this purpose is active	OFF	N/A	N/A	N/A	N/A
TEM_PTO_Mast_Swtch_Disengages	2118	if this Parameter is 1, the PTO will be disengaged if the vehicle master switch is not ON	OFF	N/A	N/A	N/A	N/A
RE-ENGAGEMENT PARAMETERS							
TEM_PTO_Key_State_Allow_ReEng	2069	If this parameter is set, the PTO will be allowed to reengage when the key state is returned to run.	OFF	N/A	N/A	N/A	N/A
TEM_PTO_Veh_Spd_Allow_ReEng	2119	if this Parameter is 1, the PTO will be reengaged after a disengage due to vehicle overspeed when the vehicle speed is below TEM_PTO_Veh_Spd_Engmnt_Limit	OFF	N/A	N/A	N/A	N/A
TEM_PTO_Eng_Spd_Allow_ReEng	2120	if this Parameter is 1, the PTO will be reengaged after a disengage due to engine overspeed when the engine speed is below TEM_PTO_Eng_Spd_Engmnt_Limit	ON	N/A	N/A	N/A	N/A
TEM_PTO_Ext_Input_Allow_ReEng	2121	if this Parameter is 1, the PTO will be reengaged after a disengage due to the designated external input when the external input is no longer active	OFF	N/A	N/A	N/A	N/A
TEM_PTO_Eng_Run_Allow_ReEng	2122	if this Parameter is 1, the PTO will be reengaged after a disengage due to the engine stopping when the engine is restarted	OFF	N/A	N/A	N/A	N/A
TEM_PTO_Mast_Swtch_Allow_ReEng	2123	if this Parameter is 1, the PTO will be reengaged after a disengage due to the master switch being turned off when the master switch is turned on again	OFF	N/A	N/A	N/A	N/A
TEM_PTO_Air_Pres_Allow_ReEng	2124	if this Parameter is 1, the PTO will be reengaged after a disengage due to low vehicle air pressure when the primary air pressure is over TEM_PTO_Air_Pres_Engmnt_Limit	OFF	N/A	N/A	N/A	N/A
TEM_PTO_Non_Neut_Allow_ReEng	2148	if this Parameter is 1, the PTO will be reengaged after a disengage due to transmission out of neutral when the transmission is placed back into neutral.	OFF	N/A	N/A	N/A	N/A
TEM_PTO_Pk_Brake_Allow_ReEng	2149	if this Parameter is 1, the PTO will be reengaged after a disengage due to park brake released when the park brake is reapplied.	OFF	N/A	N/A	N/A	N/A
ALARMS PARAMETERS							

TEM_PTO_Pk_Brake_Alarms	2131	if this Parameter is 1, an alarm will sound if the PTO is engaged, and the park brake is released	OFF	N/A	N/A	N/A	N/A
TEM_PTO_Non_Neut_Alarms	2132	if this Parameter is 1, an alarm will sound if the PTO is engaged, and transmission is taken out of neutral	OFF	N/A	N/A	N/A	N/A
TEM_PTO_Veh_Spd_Alarms	2133	if this Parameter is 1, an alarm will sound if the PTO is engaged, and the vehicle speed is over TEM_PTO_Veh_Spd_Alarm_Limit	OFF	N/A	N/A	N/A	N/A
TEM_PTO_Veh_Spd_Alarm_Limit	2134	See TEM_PTO_Veh_Spd_Alarms	5	MPH	3	100	1
TEM_PTO_Eng_Spd_Alarms	2135	if this Parameter is 1, an alarm will sound if the PTO is engaged, and the engine speed is over TEM_PTO_Eng_Spd_Alarm_Limit	OFF	N/A	N/A	N/A	N/A
TEM_PTO_Eng_Spd_Alarm_Limit	2136	See TEM_PTO_Eng_Spd_Alarms	1400	RPM	0	5000	0.1
TEM_PTO_Eng_Run_Alarms	2137	if this Parameter is 1, an alarm will sound if the PTO is engaged, and the engine is turned off	OFF	N/A	N/A	N/A	N/A
TEM_PTO_Air_Pres_Alarms	2138	if this Parameter is 1, an alarm will sound if the primary air pressure is below TEM_PTO_Air_Pres_Alarm_Limit	OFF	N/A	N/A	N/A	N/A
TEM_PTO_Air_Pres_Alarm_Limit	2139	See TEM_PTO_Air_Pres_Alarms	0	PSI	0	500	1

Parameter Definitions:

- **PTOa_Vehicle_Speed_Enable** – 2242 Set to 0 to ignore the vehicle speed. Set to 1 to require the vehicle to be below a specified vehicle speed for the PTOa to engage. Please use PTOa_Vehicle_Speed_Range to specify the appropriate vehicle speed if this parameter is set to 1.
- **PTOa_Engine_Speed_Enable** – 2243 Set to 0 to ignore the engine speed. Set to 1 to require the vehicle to be below a specified engine speed for the PTOa to be engaged. Please use PTOa_Engine_Speed_Range to specify the appropriate engine speed if this parameter is set to 1.
- **PTOa_Engine_Speed_Alarm_Enable** – 2244 Set to 0 to not have an alarm based on engine speed. Set to 1 to have a speed that an alarm will sound when the PTOa is engaged, and the engine speed is greater than the set value. Please use PTOa_Engine_Speed_Alarm_Range to specify the appropriate engine speed if this parameter is set to 1.
- **PTOa_Vehicle_Speed_Alarm_Enable** – 2267 Set to 0 to not have an alarm based on vehicle speed. Set to 1 to have a speed limit that an alarm will sound when the PTOa is engaged, and the vehicle speed is greater than the set value. Please use PTOa_Vehicle_Speed_Alarm_Range to specify the appropriate vehicle speed if this parameter is set to 1.

- **PTOa_Clutch_Pedal** – 2333 Set to 0 to ignore the clutch pedal or if the vehicle does not have a clutch pedal. Set to 1 to ensure that the clutch pedal is depressed for PTOa engagement.
- **PTOa_Engine_Running** – 2334 Set to 0 to ignore the engine. Set to 1 to ensure that the engine is running to engage and disengage if the engine stops running.
- **PTOa_Engine_Speed_Range** – 2336 Set to a speed that the engine must be below for the PTOa to engage. The PTOa will disengage if the engine speed becomes greater than the set value. If engine speed is required for PTOa operation, please use PTOa_Engine_Speed_Enable to enable this interlock.
- **PTOa_Park_Brake** – 2338 Set to 0 to ignore the park brake. Set to 1 to ensure that the park brake is set for engage and disengage if the park brake is released.
- **PTOa_Vehicle_Speed_Range** – 2339 Set to the speed that the vehicle must be below for the PTOa to engage. The PTOa will disengage if the vehicle speed becomes greater than the set value. If vehicle speed is required for PTOa operation, please use PTOa_Vehicle_Speed_Enable parameter to enable this interlock.
- **PTOa_Engine_Speed_Alarm_Range** – 2340 Set to the speed that the vehicle must be below for the PTOa to engage. The PTOa will disengage if the vehicle speed becomes greater than the set value. If vehicle speed is required for PTOa operation, please use PTOa_Engine_Speed_Alarm_Enable parameter to enable this interlock.
- **PTOa_Vehicle_Speed_Alarm_Range** – 2342 Set to a speed limit that an alarm will sound when the PTOa is engaged, and the vehicle speed is greater than the set value. If the vehicle alarm is required for PTOa operation, please use PTOa_Vehicle_Speed_Alarm_Enable to enable this alarm.
- **PTOa_Transmission_Neutral** – 2355 **Note:** this parameter will only work for vehicles with automated manual transmissions. Set to 0 to ignore the transmission state. Set to 1 to ensure that the transmission is in neutral for engagement.

Parameters exclusive to 597312

- **ENGAGEMENT PARAMETERS**
  These parameters set rules that must be met for the PTO to be engaged.
  Example :
  If TEM_PTO_Air_Pres_Engmnt_Inhib parameter is turned on, the PTO cannot be engaged if the primary vehicle air pressure is below the programmable parameter set by TEM_PTO_Air_Pres_Engmnt_Limit. **for Dash Switch**
- **TEM_PTO_PK_Brake_Engmnt_Inhib** – 2087 If this parameter is turned on, then the brake pedal must be depressed for the PTO to engage.

- **TEM_PTO_Non_Neut_Engmnt_Inhib** – 2088 If this parameter is turned on, then the transmission must be in Neutral or Park for the PTO to be engaged.
- **TEM_PTO_Neut_Engmnt_Inhib** – 2089 If this parameter is turned on, then the PTO can only be engaged if the transmission is NOT in Neutral or Park.
- **TEM_PTO_Veh_Spd_Engmnt_Inhib** – 2090 If this parameter is turned on, then the PTO cannot be engaged if the vehicle speed is over the value prescribed by TEM_PTO_Veh_Spd_Engmnt_Limit.
- **TEM_PTO_Veh_Spd_Engmnt_Limit** – 2091 This parameter sets the physical value for the Vehicle Speed Inhibit.
- **TEM_PTO_Eng_Spd_Engmnt_Inhib** –2092 If this is parameter is turned on, then the PTO cannot be engaged if the engine speed is over a certain threshold, which is defined as a programmable parameter in TEM_PTO_Eng_Spd_Engmnt_Limit.
- **TEM_PTO_Eng_Spd_Engmnt_Limit** – 2093 This parameter sets the physical value for the Engine Speed Inhibit.
- **TEM_PTO_Cltch_Engmnt_Inhib** – 2094 If this parameter is turned on, then the clutch pedal must be depressed for the PTO to engage.
- **TEM_PTO_Brake_Engmnt_Inhib** – 2095 If this parameter is turned on, then the brake pedal must be depressed for the PTO to engage.
- **TEM_PTO_Eng_Run_Engmnt_Inhib** – 2096 If this parameter is turned on, then the engine must be running for the PTO to be engaged.
- **TEM_PTO_Air_Pres_Engmnt_Inhib** – 2097 If this parameter is turned on, the PTO cannot be engaged if the primary vehicle air pressure is below the programmable parameter set by TEM_PTO_Air_Pres_Engmnt_Limit.
- **TEM_PTO_Air_Pres_Engmnt_Limit** – 2098 This parameter sets the physical value for the Air Pressure Inhibit.
- **TEM_PTO_Mast_Swtch_Engmnt_Inhib** – 2099 If this parameter is turned on, then the PTO will not be engaged if the vehicle master switch is not ON.
- **ESC_PTO_Engaged_Param** – 2199 This parameter indicates the state that the Body Controller (BCM) will read as active for the TEM PTO feedback switch (as it goes into the BCM input). This active state will be used to indicate when the PTO is engaged:
    - 0 = Input active when open circuit
    - 1 = Input active when grounded
    - 2 = not used
    - 3 = Input active when at 12V.

- **DISENGAGEMENT PARAMETERS**

  These parameters set the conditions under which the PTO will be disengaged.
- **TEM_PTO_Pk_Brake_Disengages** – 2108 If this parameter is turned on, then the PTO will be disengaged if the Park Brake is released.

- **TEM_PTO_Non_Neut_Disengages** – 2109 If this parameter is turned on, then the PTO will be disengaged if the transmission is taken out of neutral.
- **TEM_PTO_Veh_Spd_Disengages** – 2110 If this parameter is turned on, then the PTO will be disengaged if the vehicle speed is over the valued specified by TEM_PTO_Veh_Spd_DisEng_Limit.
- **TEM_PTO_Veh_Spd_DisEng_Limit** – 2111 This parameter sets the physical value for the Vehicle Speed disengagement.
- **TEM_PTO_Eng_Spd_Disengages** – 2112 If this parameter is turned on, then the PTO will be disengaged if the engine speed rises above the value set by TEM_PTO_Eng_Spd_DisEng_Limit.
- **TEM_PTO_Eng_Spd_DisEng_Limit** – 2113 This parameter sets the physical value for the Engine Speed disengagement.
- **TEM_PTO_Eng_Run_Disengages** – 2114 If this parameter is turned on, then the PTO will be disengaged if the engine is turned off.
- **TEM_PTO_Air_Pres_Disengages** – 2115 If this parameter is turned on, then the PTO will be disengaged if the primary air pressure is below the value set in TEM_PTO_Air_Pres_DisEng_Limit.
- **TEM_PTO_Air_Pres_DisEng_Limit** – 2116 This parameter sets the physical value for the Air Pressure disengagement.
- **TEM_PTO_Ext_Input_Disengages** – 2117 If this parameter is turned on, then the PTO will be disengaged if the external input designated for this purpose is active.
- **TEM_PTO_Mast_Swtch_Disengages** – 2118 If this parameter is turned on, then the PTO will be disengaged if the vehicle master switch is not ON.
- **Re-ENGAGEMENT PARAMETERS**
  These parameters set the conditions under which the PTO will be re-engaged due to a parameter disengagement.
- **TEM_PTO_Key_State_Allow_ReEng** – 2069 If this parameter is turned on, then the PTO will be allowed to reengage when the key state is returned to run.
- **TEM_PTO_Veh_Spd_Allow_ReEng** – 2119 If this parameter is turned on, then the PTO will be reengaged (after disengagement due to the vehicle being over the vehicle speed value) when the vehicle speed falls below TEM_PTO_Veh_Spd_Engmnt_Limit.
- **TEM_PTO_Eng_Spd_Allow_ReEng** – 2120 If this parameter is turned on, then the PTO will be reengaged (after disengagement due to engine overspeed) when the engine speed falls below TEM_PTO_Eng_Spd_Engmnt_Limit.
- **TEM_PTO_Ext_Input_Allow_ReEng** – 2121 If this parameter is turned on, then the PTO will be reengaged (after a disengage due to the designated external input being in active state) when the external input is no longer in active state.
- **TEM_PTO_Eng_Run_Allow_ReEng** – 2122 If this parameter is turned on, then the PTO will be reengaged (after disengagement due to engine stopping) when the engine is restarted.

- **TEM_PTO_Mast_Swtch_Allow_ReEng** – 2123 If is turned on, then the PTO will be reengaged after a disengage due to the master switch being turned off when the master switch is turned on again.
- **TEM_PTO_Air_Pres_Allow_ReEng** – 2124 If this parameter is turned on, then the PTO will be reengaged (after disengagement due to low air pressure) when the primary air pressure rises about the value specified by TEM_PTO_Air_Pres_Engmnt_Limit.
- **TEM_PTO_Non_Neut_Allow_ReEng** – 2148 If this parameter is turned on, then the PTO will be reengaged (after disengagement due to transmission out of neutral) when the transmission is placed back into neutral.
- **TEM_PTO_Pk_Brake_Allow_ReEng** – 2149 If this parameter is turned on, then the PTO will be reengaged (after disengagement due to park brake released) when the park brake is reapplied.
- **ALARM PARAMETERS**
  These parameters utilize the gauge cluster to sound an alarm to the driver when certain programmable parameters are violated.
- **TEM_PTO_Pk_Brake_Alarms** – 2131 If this parameter is turned on, then an audible alarm will sound in the cab if the PTO is engaged, and the park brake is released.
- **TEM_PTO_Non_Neut_Alarms** – 2132 If this parameter is turned on, then an audible alarm will sound in the cab if the PTO is engaged, and the transmission is taken out of neutral.
- **TEM_PTO_Veh_Spd_Alarms** – 2133 If this is turned on, then an audible alarm will sound if the PTO is engaged, and the vehicle speed is over the value set by TEM_PTO_Veh_Spd_Alarm_Limit
- **TEM_PTO_Veh_Spd_Alarm_Limit** – 2134 This parameter sets the physical value for the Vehicle Speed Alarm.
- **TEM_PTO_Eng_Spd_Alarms** – 2135 If this is turned on, then an alarm will sound if the PTO is engaged, and the engine speed is over the value set by TEM_PTO_Eng_Spd_Alarm_Limit
- **TEM_PTO_Eng_Spd_Alarm_Limit** – 2136 This parameter sets the physical value for the Engine Speed Alarm.
- **TEM_PTO_Eng_Run_Alarms** – 2137 If this parameter is turned on, then an audible alarm will sound in the cab if the PTO is engaged, and the engine is turned off.
- **TEM_PTO_Air_Pres_Alarms** – 2138 If this parameter is turned on, then an audible alarm will sound in the cab if the primary air pressure drops below the value specified by TEM_PTO_Air_Pres_Alarm_Limit.
- **TEM_PTO_Air_Pres_Alarm_Limit** – 2139 This parameter sets the physical value for the Air Pressure Alarm.

Note/s About Possible Software Feature Conflicts:
597133 conflicts with 597132, 597264, 597277, 597278, 597280, 597281, 597304, 597306.

Parts Associated with This Feature:

PART NUMBER	DESCRIPTION
MULTIPLEX SWITCH-PACK PARTS	
4057689C1	HOUSING, SWITCH 6-PACK DIN MULTIPLEX
4102438C1	SWITCH, PTO #1
AIR SOLENOID 4-PACK PARTS	
2506711C91	KIT AIR UNIVERSAL SOLENOID (NORMALLY CLOSED)
2505594C1	4-PACK AIR SOLENOID BASE
1661375C2	4-PACK AIR SOLENOID BASE 5-CAVITY CONNECTOR
1661376C1	4-PACK AIR SOLENOID BASE 5-CAVITY CONNECTOR LOCK
2033816C1	4-PACK AIR SOLENOID WIRE TERMINAL 14-GAUGE
2033819C1	4-PACK AIR SOLENOID WIRE TERMINAL 18-GAUGE
0589391C1	4-PACK AIR SOLENOID WIRE TERMINAL SEAL 14-GAUGE
2607909C1	4-PACK AIR SOLENOID WIRE TERMINAL SEAL 18-GAUGE
76-WAY CONNECTOR (THERMAL PROTECTION BARRIER PASS THROUGH)	
3574285C1	76-WAY CONNECTOR WIRE TERMINAL FEMALE 14-GUAGE
3574288C1	76-WAY CONNECTOR WIRE TERMINAL FEMALE 16-GUAGE
2003343C1	76-WAY CONNECTOR WIRE TERMINAL FEMALE 18-GUAGE
3549416C1	76-WAY CONNECTOR WIRE TERMINAL MALE 14-GUAGE
3549417C1	76-WAY CONNECTOR WIRE TERMINAL MALE 16-GUAGE
3549418C1	76-WAY CONNECTOR WIRE TERMINAL MALE 18-GUAGE
BODY CONTROL MODULE J5/J6 CONNECTOR PARTS	
3522073C1	32-WAY BODY CONTROLLER J5 (1601/1602) CONNECTOR WIRE TERMINAL 18/20-GAUGE
3534303C1	32-WAY BODY CONTROLLER J5 (1601/1602) CONNECTOR WIRE TERMINAL 20/22-GAUGE
3544878C1	18-WAY BODY CONTROLLER J6 (1606/2023) CONNECTOR WIRE TERMINAL 12-14-GAUGE [GT280]
3544877C1	18-WAY BODY CONTROLLER J6 (1606/2023) CONNECTOR WIRE TERMINAL 14/16-GAUGE [GT280]
3544876C1	18-WAY BODY CONTROLLER J6 (1606/2023) CONNECTOR WIRE TERMINAL 16/18-GAUGE [GT280]
3544875C1	18-WAY BODY CONTROLLER J6 (1606/2023) CONNECTOR WIRE TERMINAL 18/20-GAUGE [GT280]
3544884C1	18-WAY BODY CONTROLLER J6 (1606/2023) CONNECTOR WIRE TERMINAL 16/18-GAUGE [GT150]

3544883C1	18-WAY BODY CONTROLLER J6 (1606/2023) CONNECTOR WIRE TERMINAL 20/22-GAUGE [GT150]

Parts Associated with Feature

How to Test This Feature:
1. Depress the In-cab PTO switch to the ON position.
2. Verify that all enabled interlock conditions are met per programmed parameters using Diamond Logic Builder software.
3. Verify that the International-provided air solenoid is supplying air pressure at the solenoid output utilizing Diamond Logic Builder software.

Note: This feature uses body controller-based software controls which can be diagnosed with the International® Diamond Logic® Builder software (see local dealer if not owned).

References:
Refer to the applicable International® Circuit Diagrams and Service Manuals.

33.4. 13XAB: PTO CONTROL, DASH MOUNTED For Customer Provided PTO on Transfer Case; Includes Switch, Electric/Air Solenoid, Piping and Wiring

Feature Applicability to Vehicle Platforms:

- Heavy Vocational (HV)

Extended Description: This feature provides a switch in the six pack to enable a PTO that is installed on a 4x4 or 6x4 transfer case. The switch pack communicates to the body controller which will turn on the solenoid driver output on connector 1601 pin F5. The BCM will broadcast SPN 3463 on the data link to communicate this to other modules.

Transfer case PTO support programming, with SDS and DLB, is accomplished with combinations of BCM, ECM and TCM parameters.

TCM programming determines the PTO configuration for the Transfer case PTO.

BCM programming determines how the inputs are configured to support FEPTO, REPTO or Split Shaft PTOs.

ECM Programming supports engine and vehicle speed limits and accelerator pedal interaction while in PTO mode.

System Block Diagram:

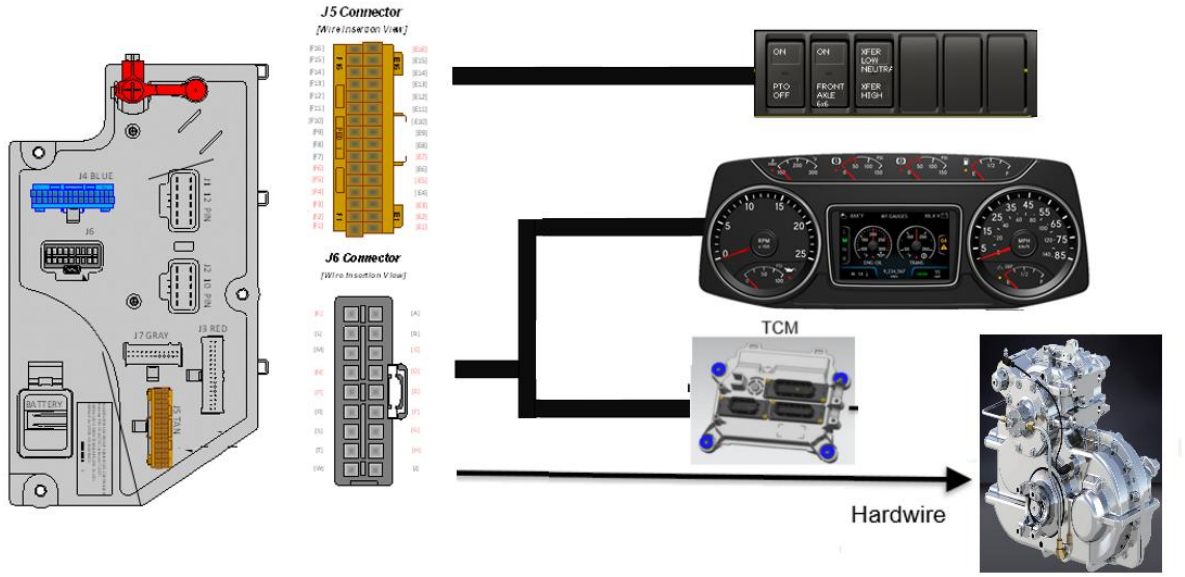

Body Controller Software Feature Codes:

- 597254 - BCM PROG, **TRANSFER CASE PTO**

Must be configured with 0597266 BCM PROG, TRANSFER CASE 2-SPD With Neutral Gear, for 4x4 false or 0597334 BCM PROG, TRANSFER CASE 2-SPD with Neutral Gear, for 6x6.

Body Controller Software Feature Code Parameters:

Parameter	ID	Description	Default	Units	Min	Max	Step
Parameters Specific for PTO Operation							
Xfer_W_N_Pos_Required_Param	2180	If this is set, the transfer case will not shift out of neutral if the transfer case PTO is engaged. .	OFF	N/A	N/A	N/A	N/A

TCM Software Parameters:

Refer to the International® T14 (2023) Overview: Power Take Off (PTO) Parameters documentation

CEM1 Controller Software Parameters:

Refer to the International® T14 (2023) Overview: Power Take Off (PTO) Parameters documentation.

Parts Associated with This Feature:

PART NUMBER	DESCRIPTION
MULTIPLEX SWITCH-PACK PARTS	
4057689C1	HOUSING, SWITCH 6-PACK DIN MULTIPLEX
4102438C1	SWITCH, PTO #1
AIR SOLENOID 4-PACK PARTS	
2506711C91	KIT AIR UNIVERSAL SOLENOID (NORMALLY CLOSED)
2505594C1	4-PACK AIR SOLENOID BASE
1661375C2	4-PACK AIR SOLENOID BASE 5-CAVITY CONNECTOR
1661376C1	4-PACK AIR SOLENOID BASE 5-CAVITY CONNECTOR LOCK
2033816C1	4-PACK AIR SOLENOID WIRE TERMINAL 14-GAUGE
2033819C1	4-PACK AIR SOLENOID WIRE TERMINAL 18-GAUGE
0589391C1	4-PACK AIR SOLENOID WIRE TERMINAL SEAL 14-GAUGE
2607909C1	4-PACK AIR SOLENOID WIRE TERMINAL SEAL 18-GAUGE
76-WAY CONNECTOR (THERMAL PROTECTION BARRIER PASS THROUGH)	

3574285C1	76-WAY CONNECTOR WIRE TERMINAL FEMALE 14-GUAGE
3574288C1	76-WAY CONNECTOR WIRE TERMINAL FEMALE 16-GUAGE
2003343C1	76-WAY CONNECTOR WIRE TERMINAL FEMALE 18-GUAGE
3549416C1	76-WAY CONNECTOR WIRE TERMINAL MALE 14-GUAGE
3549417C1	76-WAY CONNECTOR WIRE TERMINAL MALE 16-GUAGE
3549418C1	76-WAY CONNECTOR WIRE TERMINAL MALE 18-GUAGE
BODY CONTROL MODULE J5/J6 CONNECTOR PARTS	
3522073C1	32-WAY BODY CONTROLLER J5 (1601/1602) CONNECTOR WIRE TERMINAL 18/20-GAUGE
3534303C1	32-WAY BODY CONTROLLER J5 (1601/1602) CONNECTOR WIRE TERMINAL 20/22-GAUGE

How to Test This Feature:
1. Verify that all enabled interlock conditions are met and depress the PTO switch.
2. If all interlocks are met, the PTO should engage.
3. Verify the PTO switch indicator comes on and the cluster indicates the PTO is on.

Note: This feature uses body controller-based software controls which can be diagnosed with the International® Diamond Logic® Builder and SDS software.

References:
Refer to the applicable International® Circuit Diagrams and Service Manuals.

33.5. 16WLM: HOUR METER, PTO for Customer Provided PTO; Indicator Light and Hour meter in Gauge Cluster Includes Return Wire for PTO Feedback Switch.

Note: Not compatible with T14 Transmission

Feature Applicability to Vehicle Platforms:

- Heavy Vocational (HV)
- Line Haul Transport (LT)
- Medium Vocational (MV)
- Regional Haul (RH)
- Heavy Extreme (HX) 2021 and Newer

Extended Description: 16WLM provides the customer with a blunt cut wire located in the engine compartment to be wired into a body builder-installed PTO feedback switch. This feature can be ordered in addition to PTO accommodation features that do not utilize Remote Power Module outputs for the solenoid power source. Also included in this feature is a PTO indicator light in the gauge cluster and a PTO hour meter, which allows the operator to measure stationary PTO hours for maintenance records and fuel tax purposes. To view the hour meter, press the gauge cluster selection button momentarily until the text portion of the display indicates “PTO Hour.”

Note: The hour meter functionality is included with PTO accommodation features that utilize Remote Power Module outputs for the solenoid power source, and it is not necessary to order 16WLM.

System Block Diagram:

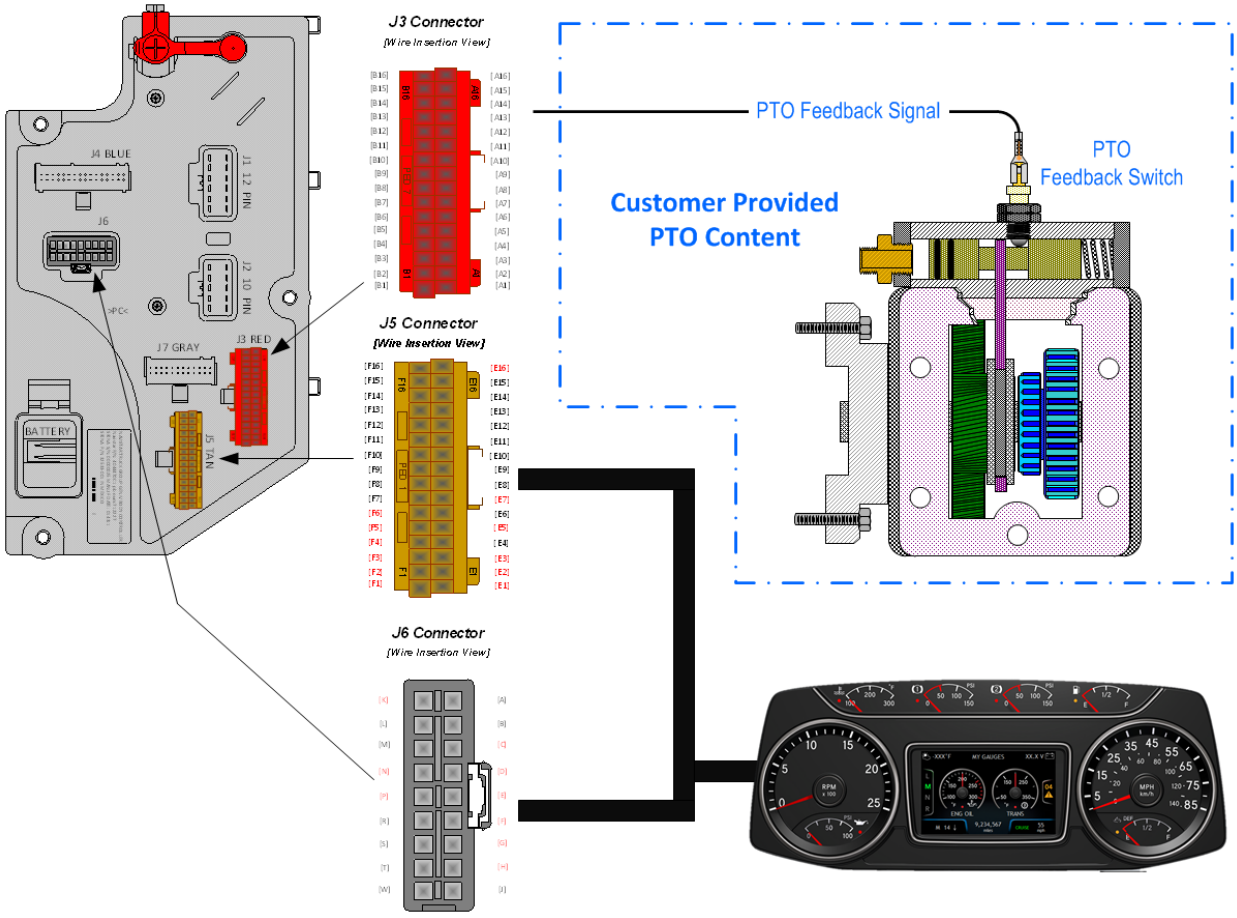

Body Controller Software Feature Codes:

- 597282 - BCM PROG, PTO HOURMETER HRS DISPLAYED IP *(Activates hour meter and PTO warning light in cluster)*

Note: Requires the following software features code for the selection of the PTO feedback switch INPUT, failure to do so will result in an OBD fault condition.

- 597279 - BCM PROG, PTO MONITOR INDICATOR *(Use with body controller INPUT – NO Remote Power Module)*

Body Controller Software Feature Code Parameters:

Parameter	ID	Description	Default	Units	Min	Max	Step
597279 - BCM PROG, PTO MONITOR INDICATOR							
ESC_PTO_Engaged_Param	2199	Active State for the PTO engagement feedback switch.	1	No Units	1	1	1
Trans_PTO_Engage_Status_Param	4315	Parameter for enabling the transmit of SPN 3460. Enabled will send the message when PTO is Engaged.		On/Off			
Trans_SSPTO_Engage_Status_Param	4316	Parameter for enabling the transmit of SPN 3462. Enabled will send the		On/Off			

VParameter		message when PTO is Engaged. Disabled will send Not Available					
597282 - BCM PROG, PTO HOURMETER HRS DISPLAYED IP							
NONE							
597283 - BCM PROG, PTO MONITOR INDICATOR & ALARM							
TEM_PTO_PK_Brake_Alarms	2131	if this Parameter is 1, an alarm will sound if the PTO is engaged, and the park brake is released	0	No Units	0	1	1
TEM_PTO_Non_Neut_Alarms	2132	if this Parameter is 1, an alarm will sound if the PTO is engaged, and transmission is taken out of neutral	0	No Units	0	1	1
TEM_PTO_Veh_Spd_Alarms	2133	if this Parameter is 1, an alarm will sound if the PTO is engaged, and the vehicle speed is over TEM_PTO_Veh_Spd_Alarm_Limit	1	No Units	0	1	1
TEM_PTO_Veh_Spd_Alarm_Limit	2134	See TEM_PTO_Veh_Spd_Alarms	5	Mph	3	100	1
TEM_PTO_Eng_Spd_Alarms	2135	if this Parameter is 1, an alarm will sound if the PTO is engaged, and the engine speed is over TEM_PTO_Eng_Spd_Alarm_Limit	1	No Units	0	1	1
TEM_PTO_Eng_Spd_Alarm_Limit	2136	See TEM_PTO_Eng_Spd_Alarms	1400	RPM	0	5000	1
TEM_PTO_Eng_Run_Alarms	2137	if this Parameter is 1, an alarm will sound if the PTO is engaged, and the engine is turned off	0	No Units	0	1	1
TEM_PTO_Air_Pres_Alarms	2138	if this Parameter is 1, an alarm will sound if the primary air pressure is below TEM_PTO_Air_Pres_Alarm_Limit	0	No Units	0	1	1
TEM_PTO_Air_Pres_Alarm_Limit	2139	See TEM_PTO_Air_Pres_Alarms	0	PSI	0	500	1
TEM_RPM_PTO_Engaged_Param	2147	Active State for the TEM PTO engagement feedback switch.	0	No Units	0	3	1
Trans_PTO_Engage_Status_Param	4315	Parameter for enabling the transmit of SPN 3460. Enabled will send the message when PTO is Engaged.		On/Off			
Trans_SSPTO_Engage_Status_Param VParameter	4316	Parameter for enabling the transmit of SPN 3462. Enabled will send the message when PTO is Engaged. Disabled will send Not Available		On/Off			

Parameter Definitions:

- **ESC_PTO_Engaged_Param** – Active State for the PTO engagement feedback switch. Ground Input is only option with Body Controller input.
- **TEM_PTO_PK_Brake_Alarms** – Activates an audible alarm that will sound if the PTO is engaged, and the park brake is released.
- **TEM_PTO_Non_Neut_Alarms** – Activates an audible alarm that will sound if the PTO is engaged, and the transmission is taken out of neutral.

- **TEM_PTO_Veh_Spd_Alarms** – If this parameter is turned on, then an audible alarm will sound if the PTO is engaged, and the vehicle speed is over the value set by TEM_PTO_Veh_Spd_Alarm_Limit. If this parameter is not activated the value in TEM_PTO_Veh_Spd_Alarm_Limit will not activate
- **TEM_PTO_Veh_Spd_Alarm_Limit** – This is the actual physical value required to sound the alarm for TEM_PTO_Veh_Spd_Alarms.
- **TEM_PTO_Eng_Spd_Alarms** – If this parameter is turned on, then an alarm will sound if the PTO is engaged, and the engine speed is over the value set by TEM_PTO_Eng_Spd_Alarm_Limit. If this parameter is not activated the value in TEM_PTO_Eng_Spd_Alarm_Limit will not activate
- **TEM_PTO_Eng_Spd_Alarm_Limit** – This is the actual physical value required to sound the alarm for TEM_PTO_Eng_Spd_Alarms.
- **TEM_PTO_Eng_Run_Alarms** – If this parameter is turned on, then an audible alarm will sound if the PTO is engaged, and the engine is turned off.
- **TEM_PTO_Air_Pres_Alarms** – If this parameter is turned on, then an audible alarm will sound in the cab if the primary air pressure drops below the value specified by TEM_PTO_Air_Pres_Alarm_Limit. If this parameter is not activated the value in TEM_PTO_Air_Pres_Alarm_Limit will not activate
- **TEM_PTO_Air_Pres_Alarm_Limit** – This is the actual physical value required to sound the alarm for TEM_PTO_Air_Pres_Alarms.
- **TEM_RPM_PTO_Engaged_Param** – This parameter indicates the state that the Body Controller (BCM) will read as active for the TEM PTO feedback switch (as it goes into the BCM input). This active state will be used to indicate when the PTO is engaged:
    - 0 = Input active when open circuit
    - 1 = Input active when grounded
    - 2 = not used
    - 3 = Input active when at 12V.

Note/s About Possible Software Feature Conflicts:
597279 and 597283 are mutually exclusive.

Parts Associated with This Feature:

PART NUMBER	DESCRIPTION
32-WAY CONNECTOR BODY CONTROL MODULE J4/J5/J6 CONNECTOR PARTS	
3522073C1	32-WAY BODY CONTROLLER J3/J5 (1601/1602) CONNECTOR WIRE TERMINAL 18/20-GAUGE
3534303C1	32-WAY BODY CONTROLLER J3/J5 (1601/1602) CONNECTOR WIRE TERMINAL 20/22-GAUGE

Parts Associated with Feature

How to Test This Feature:

1. Customer should apply the correct active state voltage 12V or GND (as programmed in the Diamond Logic® Builder software) to the International-provided PTO engagement feedback wire.
2. Verify that the PTO indicator light in the gauge cluster comes on and stays on as long as the active state voltage is applied.

Note: This feature uses body controller-based software controls which can be diagnosed with The International® Diamond Logic® Builder software (see local dealer if not owned).

References:
Refer to the applicable International® Circuit Diagrams and Service Manuals.

33.6. 60ABA: BDY INTG, PTO ACCOMMODATION for Monitoring Cable Shift Engaged PTO, With Indicator Light and Audible Alarm in Gauge Cluster (requires one Remote Power Module (RPM) input).

Note: Not compatible with T14 Transmission

Feature Applicability to Vehicle Platforms:
- Heavy Vocational (HV)
- Medium Vocational (MV)

Extended Description: This feature utilizes a customer-mounted PTO feedback switch wired to an RPM input to drive an indicator light in the gauge cluster that allows the operator to determine that the PTO is engaged. An audible alarm is used to warn the operator when the PTO is engaged during unsafe vehicle operating conditions such as when the park brake is released, or the engine speed is too high. Operating limits are established through programmable parameters that are set in the Body Controller (BCM). The RPM input also drives a PTO hour meter to allow the operator to measure stationary PTO hours for maintenance records and fuel tax purposes. To view the PTO hour meter, press the gauge cluster display selector button momentarily until the text portion of the display indicates “PTO Hour.”

A Cable-Shifted PTO is a gear-to-gear engagement type mechanism. Specific transmission operating modes are required to allow safe engagement of a Cable-Shifted PTO. The PTO gear in the transmission must be stopped before engagement of a Cable-Shifted PTO should be attempted. The clutch must be depressed with the vehicle parked to engage the PTO for a manual transmission. An automatic transmission must be in any driving gear with vehicle parked to engage a Cable-Shifted PTO.

The PTO alarms are controlled by programmable parameters set in the BCM. Factory default settings for these programmable parameters are listed in the tables below. Please use the Diamond Logic® Builder software to determine pin locations for RPM

inputs (refer to the CONNECTOR screen view) and to set programmable parameters (refer to the FEATURE screen view).

System Block Diagram:

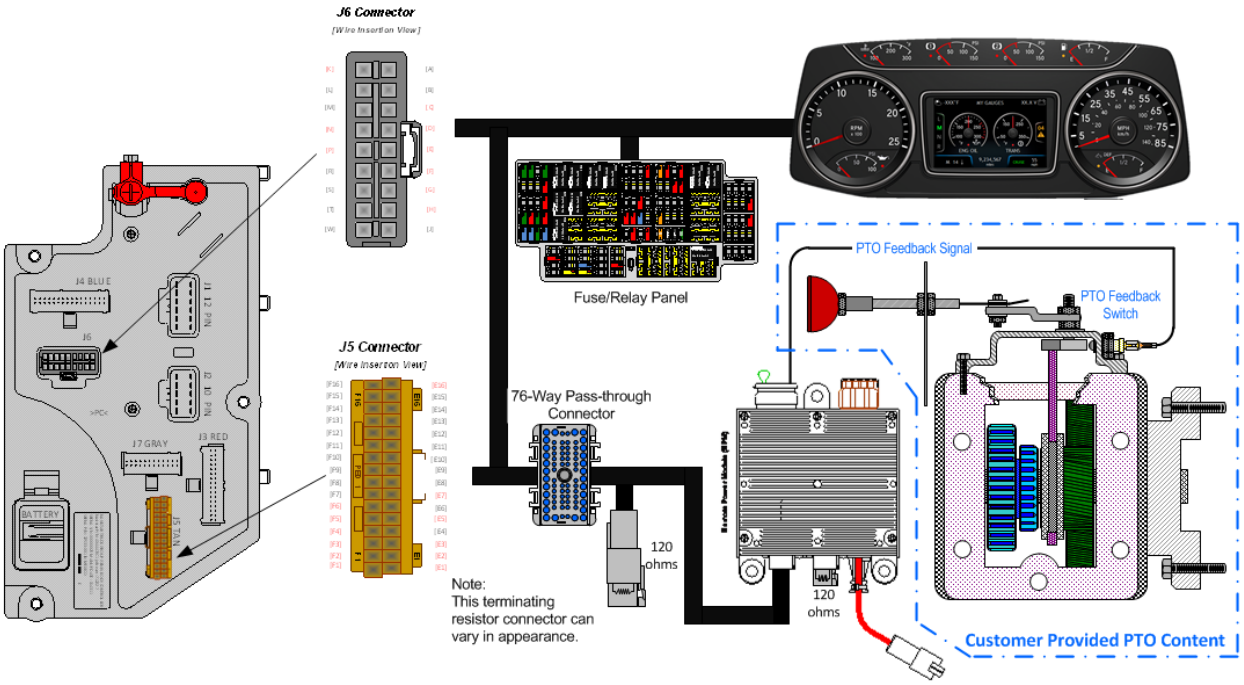

Body Controller Software Feature Codes:

- Mechanical PTO control: programming only activates Hour Meter feature.
- 597282 - BCM PROG, **PTO HOURMETER HRS DISPLAYED IP**
- 597283 - BCM PROG, **PTO MONITOR INDICATOR & ALARM** (failure to add this feature will result in an OBD fault condition)
- **Note: if Eaton® Procision™ or Endurant™ Transmission is being used add:**
  - **597276 – BCM PROG, PTO ENABLER J1939 Engagement Consent for Eaton® Procision™ and Endurant™**

Body Controller Software Feature Code Parameters:

Parameter	ID	Description	Default	Units	Min	Max	Step
On – Indicates a 1 is set for the parameter							
Off – Indicates a 0 is set in for this parameter							
ENGAGEMENT PARAMETERS							
ALARMS PARAMETERS							

TEM_PTO_Pk_Brake_Alarms	2131	if this Parameter is 1, an alarm will sound if the PTO is engaged, and the park brake is released	OFF	N/A	N/A	N/A	N/A
TEM_PTO_Non_Neut_Alarms	2132	if this Parameter is 1, an alarm will sound if the PTO is engaged, and transmission is taken out of neutral	OFF	N/A	N/A	N/A	N/A
TEM_PTO_Veh_Spd_Alarms	2133	if this Parameter is 1, an alarm will sound if the PTO is engaged, and the vehicle speed is over TEM_PTO_Veh_Spd_Alarm_Limit	ON	N/A	N/A	N/A	N/A
TEM_PTO_Veh_Spd_Alarm_Limit	2134	See TEM_PTO_Veh_Spd_Alarms	3	MPH	3	100	1
TEM_PTO_Eng_Spd_Alarms	2135	if this Parameter is 1, an alarm will sound if the PTO is engaged, and the engine speed is over TEM_PTO_Eng_Spd_Alarm_Limit	ON	N/A	N/A	N/A	N/A
TEM_PTO_Eng_Spd_Alarm_Limit	2136	See TEM_PTO_Eng_Spd_Alarms	1400	RPM	0	5000	0.1
TEM_PTO_Eng_Run_Alarms	2137	if this Parameter is 1, an alarm will sound if the PTO is engaged, and the engine is turned off	OFF	N/A	N/A	N/A	N/A
TEM_PTO_Air_Pres_Alarms	2138	if this Parameter is 1, an alarm will sound if the primary air pressure is below TEM_PTO_Air_Pres_Alarm_Limit	OFF	N/A	N/A	N/A	N/A
TEM_PTO_Air_Pres_Alarm_Limit	2139	See TEM_PTO_Eng_Spd_Alarms	0	PSI	0	500	1
TEM_RPM_PTO_Engaged_Param	2147	Active State for the TEM PTO engagement feedback switch.	0	No Units	0	3	1

Parameter Definitions:

- **ALARM PARAMETERS**
  These parameters utilize the gauge cluster to sound an alarm to the driver when certain programmable parameters are violated.
- **TEM_PTO_Pk_Brake_Alarms** – If this parameter is turned on, then an audible alarm will sound in the cab if the PTO is engaged, and the park brake is released.
- **TEM_PTO_Non_Neut_Alarms** – If this parameter is turned on, then an audible alarm will sound in the cab if the PTO is engaged, and the transmission is taken out of neutral.
- **TEM_PTO_Veh_Spd_Alarms** – If this is turned on, then an audible alarm will sound if the PTO is engaged, and the vehicle speed is over the value set by TEM_PTO_Veh_Spd_Alarm_Limit
- **TEM_PTO_Veh_Spd_Alarm_Limit** – This parameter sets the physical value for the Vehicle Speed Alarm.
- **TEM_PTO_Eng_Spd_Alarms** – If this is turned on, then an alarm will sound if the PTO is engaged, and the engine speed is over the value set by TEM_PTO_Eng_Spd_Alarm_Limit

- **TEM_PTO_Eng_Spd_Alarm_Limit** – This parameter sets the physical value for the Engine Speed Alarm.
- **TEM_PTO_Eng_Run_Alarms** – If this parameter is turned on, then an audible alarm will sound in the cab if the PTO is engaged, and the engine is turned off.
- **TEM_PTO_Air_Pres_Alarms** – If this parameter is turned on, then an audible alarm will sound in the cab if the primary air pressure drops below the value specified by TEM_PTO_Air_Pres_Alarm_Limit.
- **TEM_PTO_Air_Pres_Alarm_Limit** – This parameter sets the physical value for the Air Pressure Alarm.
- **TEM_RPM_PTO_Engaged_Param** – This parameter indicates the active state that the body controller (BCM) will read as active for the TEM PTO feedback switch (as it goes into the RPM input). This active state will be used to indicate when the PTO is engaged:
    - 0 = Input active when open circuit
    - 1 = Input active when grounded
    - 2 = not used
    - 3 = Input active when at 12V.

Note/s About Possible Software Feature Conflicts:
597200, 597132, 597264, 597277, 597278, 597280, 597281, 597304, 597306, and 597307

Parts Associated with This Feature:

PART NUMBER	DESCRIPTION
RPM 23-WAY CONNECTOR	
3677559C1	23-WAY CONNECTOR
1698937C1	16, 18, 20-GAUGE TERMINAL
1688285C1	CAVITY PLUG

Parts Associated with Feature

How to Test This Feature:
Verify that the RPM input labeled PTO_Feedback_Switch (pin position specified by the Diamond Logic®
Builder software) is receiving the correct voltage (12V or Ground (GND) as specified by the programmable parameter 2147 in the Diamond Logic® Builder software.
Make certain that the PTO indicator light in the gauge cluster illuminates by engaging the PTO.
The audible alarm can be tested by activating a vehicle condition that will sound the alarm based upon
The settings of the programmable parameters. For example, if the park brake interlock is programmed on, release the park brake and engage the PTO. The audible alarms should sound with continuous beeps.

Note: This feature uses body controller-based software controls which can be diagnosed with The International® Diamond Logic® Builder software (see local dealer if not owned).

References:
Refer to the applicable International® Circuit Diagrams and Service Manuals.

33.7. 60ABB: BDY INTG, PTO ACCOMMODATION for Muncie Lectra-Shift PTO Engagement and Disengagement, With Switch Mounted on Dash; Includes Indicator Light and Audible Alarm in Gauge Cluster (requires one RPM input and one output).

Note: Not compatible with T14 Transmission

Feature Applicability to Vehicle Platforms:

- Heavy Vocational (HV)
- Medium Vocational (MV)

Extended Description: This feature provides a center stable, momentary rocker switch in a cab switch pack that drives an RPM output and a 40-Amp relay that are used to engage and disengage the Muncie® Lectra-Shift PTO. The high current relay output is engaged momentarily to shift in the PTO gear mechanism. Once engaged, the RPM output is activated to keep the PTO gear in the engaged position. This feature utilizes a customer-mounted PTO feedback switch wired to an RPM input to drive an indicator light in the gauge cluster that allows the operator to determine that the PTO is engaged.

An audible alarm is used to warn the operator when the PTO is engaged during unsafe vehicle operating conditions such as when the park brake is released, or the engine speed is too high. Operating limits are established through programmable parameters that are set in the Body Controller (BCM). The RPM input also drives a PTO hour meter to allow the operator to measure stationary PTO hours for maintenance records and fuel tax purposes. To view the PTO hour meter, press the gauge cluster display selector button momentarily until the text portion of the display indicates “PTO Hour.”

The Lectra-Shift is a gear-to-gear engagement PTO mechanism. Specific transmission operating modes are required to allow safe engagement of a Lectra-Shift PTO. The PTO gear in the transmission must be stopped before engagement of the Lectra-Shift PTO should be attempted. The clutch must be depressed with the vehicle parked to engage the Lectra-Shift PTO for a manual transmission. An automatic transmission must be in any driving gear with vehicle parked to engage the Lectra-Shift PTO. Engagement, disengagement, and re-engagement parameters should be set according to the type of transmission on which the Lectra-Shift is mounted.

The PTO alarms are controlled by programmable parameters set in the Body Controller (BCM). Factory default settings for these programmable parameters are listed in the

tables below. Through programmable parameters, the vehicle can be programmed to customize the number of times that an operator can request a PTO engagement per key cycle. The customer can also customize the maximum time allowed to engage the solenoid per attempt, and the length of time between a failed engagement attempt and the next time the operator can attempt to engage the PTO.
Please use the Diamond Logic® Builder software to determine pin locations for RPM inputs and outputs (refer to the CONNECTOR screen view) and to set programmable parameters (refer to the FEATURE screen view).

System Block Diagram:

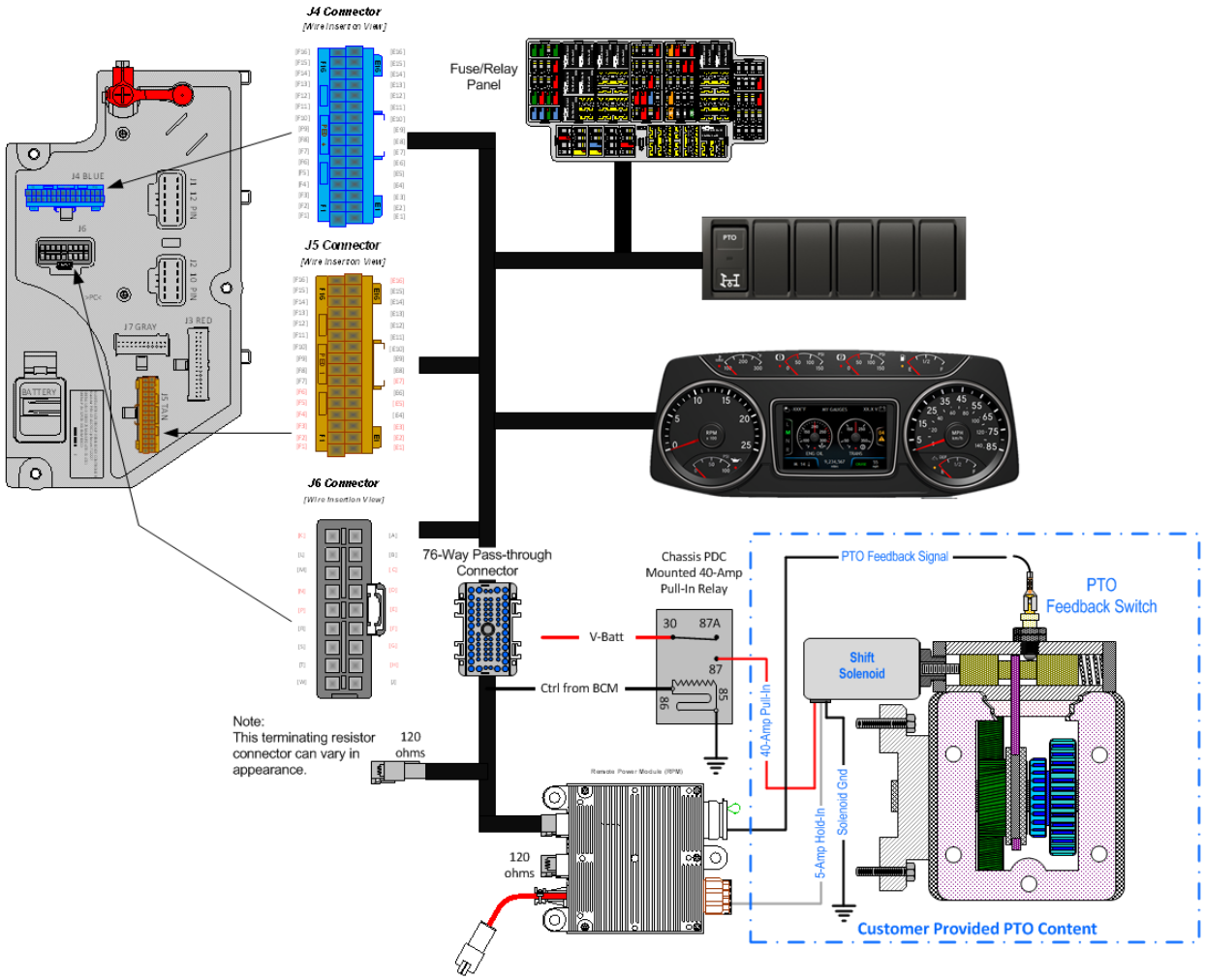

Note: It is important to ensure the Power Take Off (PTO) internal shift mechanism has adequate pneumatic potential communication for the full engagement of the PTO coupling/decoupling mechanism. Full engagement is typically a function of the available pneumatic potential sourced from the chassis primary air pressure supply system which

[can] limit the full power transmission capabilities of the PTO coupling and decoupling mechanism/s.

Body Controller Software Feature Codes:

- 597200 - BCM PROG, **PTO CONTROL LOGIC for Dash Switch**
- 597281 - BCM PROG, **PTO SHIFT for Lectra Shift Control**
- 597282 - BCM PROG, **PTO HOURMETER HRS DISPLAYED IP**
- 597283 - BCM PROG, **PTO MONITOR INDICATOR & ALARM** (failure to add this feature will result in an OBD fault condition)
- **Note: Feature 16WLM is part of 60ABB**
- **Note: if Eaton® Procision™ or Endurant™ Transmission is being used add:**
  - **597276 – BCM PROG, PTO ENABLER J1939 Engagement Consent for Eaton® Procision™ and Endurant™**

Body Controller Software Feature Code Parameters:

Parameter	ID	Description	Default	Units	Min	Max	Step
On – Indicates a 1 is set for the parameter							
Off – Indicates a 0 is set in for this parameter							
ENGAGEMENT PARAMETERS							
TEM_PTO_PK_Brake_Engmnt_Inhib	2087	If this Parameter is 1, the PTO will not be engaged if the Park Brake is not set.	OFF	N/A	N/A	N/A	N/A
TEM_PTO_Non_Neut_Engmnt_Inhib	2088	If this Parameter is 1, the PTO will not be engaged if the Transmission is not in Neutral or Park	OFF	N/A	N/A	N/A	N/A
TEM_PTO_Neut_Engmnt_Inhib	2089	If this Parameter is 1, the PTO will only be engaged if the Transmission is not in Neutral or Park	OFF	N/A	N/A	N/A	N/A
TEM_PTO_Veh_Spd_Engmnt_Inhib	2090	If this Parameter is 1, the PTO will not be engaged if the vehicle speed is over the value set in TEM_PTO_Veh_Spd_Engmnt_Limit	ON	N/A	N/A	N/A	N/A
TEM_PTO_Veh_Spd_Engmnt_Limit	2091	See TEM_PTO_Veh_Spd_Engmnt_Inhib	3.00	MPH	1	100	1
TEM_PTO_Eng_Spd_Engmnt_Inhib	2092	If this Parameter is 1, the PTO will not be engaged if the engine speed is over the value set in TEM_PTO_Eng_Spd_Engmnt_Limit	ON	N/A	N/A	N/A	N/A
TEM_PTO_Eng_Spd_Engmnt_Limit	2093	See TEM_PTO_Eng_Spd_Engmnt_Inhib	1000	RPM	100	5000	0.1
TEM_PTO_Cltch_Engmnt_Inhib	2094	If this Parameter is 1, the PTO will not be engaged if the clutch pedal is not depressed	OFF	N/A	N/A	N/A	N/A
TEM_PTO_Brake_Engmnt_Inhib	2095	If this Parameter is 1, the PTO will not be engaged if the brake pedal is not depressed	OFF	N/A	N/A	N/A	N/A
TEM_PTO_Eng_Run_Engmnt_Inhib	2096	If this Parameter is 1, the PTO will not be engaged if the engine is not running	OFF	N/A	N/A	N/A	N/A
TEM_PTO_Air_Pres_Engmnt_Inhib	2097	If this Parameter is 1, the PTO will not be engaged if the primary	OFF	N/A	N/A	N/A	N/A

		vehicle air pressure is below TEM_PTO_Air_Pres_Engmnt_Limit					
TEM_PTO_Air_Pres_Engmnt_Limit	2098	See TEM_PTO_Air_Pres_Engmnt_Inhib	90	PSI	1	500	1
TEM_PTO_Mast_Swtch_Engmnt_Inhib	2099	If this Parameter is 1, the PTO will not be engaged if the vehicle master switch is not ON.	OFF	N/A	N/A	N/A	N/A
DISENGAGEMENT PARAMETERS							
TEM_PTO_Pk_Brake_Disengages	2108	if this Parameter is 1, the PTO will be disengaged if the Park Brake is released	OFF	N/A	N/A	N/A	N/A
TEM_PTO_Non_Neut_Disengages	2109	if this Parameter is 1, the PTO will be disengaged if the transmission is taken out of neutral	OFF	N/A	N/A	N/A	N/A
TEM_PTO_Veh_Spd_Disengages	2110	if this Parameter is 1, the PTO will be disengaged if the vehicle speed is over the value set in TEM_PTO_Veh_Spd_DisEng_Limit	OFF	N/A	N/A	N/A	N/A
TEM_PTO_Veh_Spd_DisEng_Limit	2111	see TEM_PTO_Veh_Spd_Disengages	3	MPH	3	100	1
TEM_PTO_Eng_Spd_Disengages	2112	if this Parameter is 1, the PTO will be disengaged if the vehicle speed is over the value set in TEM_PTO_Eng_Spd_DisEng_Limit	ON	N/A	N/A	N/A	N/A
TEM_PTO_Eng_Spd_DisEng_Limit	2113	see TEM_PTO_Eng_Spd_Disengages	1800	RPM	0	5000	1
TEM_PTO_Eng_Run_Disengages	2114	If this Parameter is 1, the PTO will be disengaged if the engine is turned off	OFF	N/A	N/A	N/A	N/A
TEM_PTO_Air_Pres_Disengages	2115	if this Parameter is 1, the PTO will be disengaged if the primary air pressure is below the value set in TEM_PTO_Air_Pres_DisEng_Limit	OFF	N/A	N/A	N/A	N/A
TEM_PTO_Air_Pres_DisEng_Limit	2116	see TEM_PTO_Air_Pres_Disengages	80	PSI	0	500	1
TEM_PTO_Ext_Input_Disengages	2117	if this Parameter is 1, the PTO will be disengaged if the external input designated for this purpose is active	OFF	N/A	N/A	N/A	N/A
TEM_PTO_Mast_Swtch_Disengages	2118	if this Parameter is 1, the PTO will be disengaged if the vehicle master switch is not ON	OFF	N/A	N/A	N/A	N/A
RE-ENGAGEMENT PARAMETERS							
TEM_PTO_Key_State_Allow_ReEng	2069	If this parameter is set, the PTO will be allowed to reengage when the key state is returned to run.	OFF	N/A	N/A	N/A	N/A
TEM_PTO_Veh_Spd_Allow_ReEng	2119	if this Parameter is 1, the PTO will be reengaged after a disengage due to vehicle overspeed when the vehicle speed is below TEM_PTO_Veh_Spd_Engmnt_Limit	OFF	N/A	N/A	N/A	N/A
TEM_PTO_Eng_Spd_Allow_ReEng	2120	if this Parameter is 1, the PTO will be reengaged after a disengage due to engine overspeed when the engine speed is below TEM_PTO_Eng_Spd_Engmnt_Limit	ON	N/A	N/A	N/A	N/A
TEM_PTO_Ext_Input_Allow_ReEng	2121	if this Parameter is 1, the PTO will be reengaged after a disengage due to the designated external input	OFF	N/A	N/A	N/A	N/A

		when the external input is no longer active					
TEM_PTO_Eng_Run_Allow_ReEng	2122	if this Parameter is 1, the PTO will be reengaged after a disengage due to the engine stopping when the engine is restarted	OFF	N/A	N/A	N/A	N/A
TEM_PTO_Mast_Swtch_Allow_ReEng	2123	if this Parameter is 1, the PTO will be reengaged after a disengage due to the master switch being turned off when the master switch is turned on again	OFF	N/A	N/A	N/A	N/A
TEM_PTO_Air_Pres_Allow_ReEng	2124	if this Parameter is 1, the PTO will be reengaged after a disengage due to low vehicle air pressure when the primary air pressure is over TEM_PTO_Air_Pres_Engmnt_Limit	OFF	N/A	N/A	N/A	N/A
TEM_PTO_Non_Neut_Allow_ReEng	2148	if this Parameter is 1, the PTO will be reengaged after a disengage due to transmission out of neutral when the transmission is placed back into neutral.	OFF	N/A	N/A	N/A	N/A
TEM_PTO_Pk_Brake_Allow_ReEng	2149	if this Parameter is 1, the PTO will be reengaged after a disengage due to park brake released when the park brake is reapplied.	OFF	N/A	N/A	N/A	N/A
ALARMS PARAMETERS							
TEM_PTO_Pk_Brake_Alarms	2131	if this Parameter is 1, an alarm will sound if the PTO is engaged, and the park brake is released	OFF	N/A	N/A	N/A	N/A
TEM_PTO_Non_Neut_Alarms	2132	if this Parameter is 1, an alarm will sound if the PTO is engaged, and transmission is taken out of neutral	OFF	N/A	N/A	N/A	N/A
TEM_PTO_Veh_Spd_Alarms	2133	if this Parameter is 1, an alarm will sound if the PTO is engaged, and the vehicle speed is over TEM_PTO_Veh_Spd_Alarm_Limit	ON	N/A	N/A	N/A	N/A
TEM_PTO_Veh_Spd_Alarm_Limit	2134	See TEM_PTO_Veh_Spd_Alarms	3	MPH	3	100	1
TEM_PTO_Eng_Spd_Alarms	2135	if this Parameter is 1, an alarm will sound if the PTO is engaged, and the engine speed is over TEM_PTO_Eng_Spd_Alarm_Limit	ON	N/A	N/A	N/A	N/A
TEM_PTO_Eng_Spd_Alarm_Limit	2136	See TEM_PTO_Eng_Spd_Alarms	1400	RPM	0	5000	0.1
TEM_PTO_Eng_Run_Alarms	2137	if this Parameter is 1, an alarm will sound if the PTO is engaged, and the engine is turned off	OFF	N/A	N/A	N/A	N/A
TEM_PTO_Air_Pres_Alarms	2138	if this Parameter is 1, an alarm will sound if the primary air pressure is below TEM_PTO_Air_Pres_Alarm_Limit	OFF	N/A	N/A	N/A	N/A
TEM_PTO_Air_Pres_Alarm_Limit	2139	See TEM_PTO_Air_Pres_Alarms	0	PSI	0	500	1
TEM_RPM_PTO_Engaged_Param	2147	Active State for the TEM PTO engagement feedback switch.	0	No Units	0	3	1
Unique for 597281 - BCM PROG, PTO SHIFT for Lectra Shift Control							

TEM_PTO_Retaining_Solenoid_Fuse	2022	Fuse value for the TEM PTO Single Polarity engagement retaining solenoid power.	20	Amps	0	20	0.1
TEM_PTO_Allowed_Engagement_Time	2057	Time allowed for engagement of the Lectra shift PTO.	3	seconds	0	10	0.1
TEM_PTO_Lectra_Shift_Max_Retries	2058	The maximum number of times a PTO engagement request can be issued in a key cycle.	0	No Units	0	65535	1
TEM_PTO_Lectra_Shift_Retry_Time	2059	Time frame for retry counting in Lectra shift engagement algorithm.	600	seconds	0	600	1

Parameter Definitions:

- **ENGAGEMENT PARAMETERS**

  These parameters set rules that must be met for the PTO to be engaged.

  Example: If TEM_PTO_Air_Pres_Engmnt_Inhib parameter is turned on, the PTO cannot be engaged if the primary vehicle air pressure is below the programmable parameter set by TEM_PTO_Air_Pres_Engmnt_Limit.

  for Dash Switch

- **TEM_PTO_PK_Brake_Engmnt_Inhib** – 2087 If this parameter is turned on, then the brake pedal must be depressed for the PTO to engage.
- **TEM_PTO_Non_Neut_Engmnt_Inhib** – 2088 If this parameter is turned on, then the transmission must be in Neutral or Park for the PTO to be engaged.
- **TEM_PTO_Neut_Engmnt_Inhib** – 2089 If this parameter is turned on, then the PTO can only be engaged if the transmission is NOT in Neutral or Park.
- **TEM_PTO_Veh_Spd_Engmnt_Inhib** – 2090 If this parameter is turned on, then the PTO cannot be engaged if the vehicle speed is over the value prescribed by TEM_PTO_Veh_Spd_Engmnt_Limit.
- **TEM_PTO_Veh_Spd_Engmnt_Limit** – 2091 This parameter sets the physical value for the Vehicle Speed Inhibit.
- **TEM_PTO_Eng_Spd_Engmnt_Inhib** –2092 If this is parameter is turned on, then the PTO cannot be engaged if the engine speed is over a certain threshold, which is defined as a programmable parameter in TEM_PTO_Eng_Spd_Engmnt_Limit.
- **TEM_PTO_Eng_Spd_Engmnt_Limit** – 2093 This parameter sets the physical value for the Engine Speed Inhibit.
- **TEM_PTO_Cltch_Engmnt_Inhib** – 2094 If this parameter is turned on, then the clutch pedal must be depressed for the PTO to engage.
- **TEM_PTO_Brake_Engmnt_Inhib** – 2095 If this parameter is turned on, then the brake pedal must be depressed for the PTO to engage.
- **TEM_PTO_Eng_Run_Engmnt_Inhib** – 2096 If this parameter is turned on, then the engine must be running for the PTO to be engaged.
- **TEM_PTO_Air_Pres_Engmnt_Inhib** – 2097 If this parameter is turned on, the PTO cannot be engaged if the primary vehicle air pressure is below the programmable parameter set by TEM_PTO_Air_Pres_Engmnt_Limit.

- **TEM_PTO_Air_Pres_Engmnt_Limit** – 2098 This parameter sets the physical value for the Air Pressure Inhibit.
- **TEM_PTO_Mast_Swtch_Engmnt_Inhib** – 2099 If this parameter is turned on, then the PTO will not be engaged if the vehicle master switch is not ON.
- **DISENGAGEMENT PARAMETERS**
  These parameters set the conditions under which the PTO will be disengaged.
- **TEM_PTO_Pk_Brake_Disengages** – 2108 If this parameter is turned on, then the PTO will be disengaged if the Park Brake is released.
- **TEM_PTO_Non_Neut_Disengages** – 2109 If this parameter is turned on, then the PTO will be disengaged if the transmission is taken out of neutral.
- **TEM_PTO_Veh_Spd_Disengages** – 2110 If this parameter is turned on, then the PTO will be disengaged if the vehicle speed is over the valued specified by TEM_PTO_Veh_Spd_DisEng_Limit.
- **TEM_PTO_Veh_Spd_DisEng_Limit** – 2111 This parameter sets the physical value for the Vehicle Speed disengagement.
- **TEM_PTO_Eng_Spd_Disengages** – 2112 If this parameter is turned on, then the PTO will be disengaged if the engine speed rises above the value set by TEM_PTO_Eng_Spd_DisEng_Limit.
- **TEM_PTO_Eng_Spd_DisEng_Limit** – 2113 This parameter sets the physical value for the Engine Speed disengagement.
- **TEM_PTO_Eng_Run_Disengages** – 2114 If this parameter is turned on, then the PTO will be disengaged if the engine is turned off.
- **TEM_PTO_Air_Pres_Disengages** – 2115 If this parameter is turned on, then the PTO will be disengaged if the primary air pressure is below the value set in TEM_PTO_Air_Pres_DisEng_Limit.
- **TEM_PTO_Air_Pres_DisEng_Limit** – 2116 This parameter sets the physical value for the Air Pressure disengagement.
- **TEM_PTO_Ext_Input_Disengages** – 2117 If this parameter is turned on, then the PTO will be disengaged if the external input designated for this purpose is active.
- **TEM_PTO_Mast_Swtch_Disengages** – 2118 If this parameter is turned on, then the PTO will be disengaged if the vehicle master switch is not ON.
- **Re-ENGAGEMENT PARAMETERS**
  These parameters set the conditions under which the PTO will be re-engaged due to a parameter disengagement.
- **TEM_PTO_Key_State_Allow_ReEng** – 2069 If this parameter is turned on, then the PTO will be allowed to reengage when the key state is returned to run.
- **TEM_PTO_Veh_Spd_Allow_ReEng** – 2119 If this parameter is turned on, then the PTO will be reengaged (after disengagement due to the vehicle being over the vehicle speed value) when the vehicle speed falls below TEM_PTO_Veh_Spd_Engmnt_Limit.

- **TEM_PTO_Eng_Spd_Allow_ReEng** – 2120 If this parameter is turned on, then the PTO will be reengaged (after disengagement due to engine overspeed) when the engine speed falls below TEM_PTO_Eng_Spd_Engmnt_Limit.
- **TEM_PTO_Ext_Input_Allow_ReEng** – 2121 If this parameter is turned on, then the PTO will be reengaged (after a disengage due to the designated external input being in active state) when the external input is no longer in active state.
- **TEM_PTO_Eng_Run_Allow_ReEng** – 2122 If this parameter is turned on, then the PTO will be reengaged (after disengagement due to engine stopping) when the engine is restarted.
- **TEM_PTO_Mast_Swtch_Allow_ReEng** – 2123 If is turned on, then the PTO will be reengaged after a disengage due to the master switch being turned off when the master switch is turned on again.
- **TEM_PTO_Air_Pres_Allow_ReEng** – 2124 If this parameter is turned on, then the PTO will be reengaged (after disengagement due to low air pressure) when the primary air pressure rises about the value specified by TEM_PTO_Air_Pres_Engmnt_Limit.
- **TEM_PTO_Non_Neut_Allow_ReEng** – 2148 If this parameter is turned on, then the PTO will be reengaged (after disengagement due to transmission out of neutral) when the transmission is placed back into neutral.
- **TEM_PTO_Pk_Brake_Allow_ReEng** – 2149 If this parameter is turned on, then the PTO will be reengaged (after disengagement due to park brake released) when the park brake is reapplied.
- **ALARM PARAMETERS**
  These parameters utilize the gauge cluster to sound an alarm to the driver when certain programmable parameters are violated.
- **TEM_PTO_Pk_Brake_Alarms** – If this parameter is turned on, then an audible alarm will sound in the cab if the PTO is engaged, and the park brake is released.
- **TEM_PTO_Non_Neut_Alarms** – 2132 If this parameter is turned on, then an audible alarm will sound in the cab if the PTO is engaged, and the transmission is taken out of neutral.
- **TEM_PTO_Veh_Spd_Alarms** – 2133 If this is turned on, then an audible alarm will sound if the PTO is engaged, and the vehicle speed is over the value set by TEM_PTO_Veh_Spd_Alarm_Limit
- **TEM_PTO_Veh_Spd_Alarm_Limit** – 2134 This parameter sets the physical value for the Vehicle Speed Alarm.
- **TEM_PTO_Eng_Spd_Alarms** – 2135 If this is turned on, then an alarm will sound if the PTO is engaged, and the engine speed is over the value set by TEM_PTO_Eng_Spd_Alarm_Limit
- **TEM_PTO_Eng_Spd_Alarm_Limit** – 2136 This parameter sets the physical value for the Engine Speed Alarm.

- **TEM_PTO_Eng_Run_Alarms** – 2137 If this parameter is turned on, then an audible alarm will sound in the cab if the PTO is engaged, and the engine is turned off.
- **TEM_PTO_Air_Pres_Alarms** – 2138 If this parameter is turned on, then an audible alarm will sound in the cab if the primary air pressure drops below the value specified by TEM_PTO_Air_Pres_Alarm_Limit.
- **TEM_PTO_Air_Pres_Alarm_Limit** – 2139 This parameter sets the physical value for the Air Pressure Alarm.
- **TEM_RPM_PTO_Engaged_Param** – 2147 This parameter indicates the active state that the body controller (BCM) will read as active for the TEM PTO feedback switch (as it goes into the RPM input). This active state will be used to indicate when the PTO is engaged:
    - 0 = Input active when open circuit
    - 1 = Input active when grounded
    - 2 = not used
    - 3 = Input active when at 12V

- Parameters unique to 597281
- **TEM_PTO_Retaining_Solenoid_Fuse** – 2022 This parameter is the fusing value for the Remote Power Module output feeding the retaining coil that holds the electric solenoid in the engaged position. If current exceeds this value, the BCM will turn off the output.
- **TEM_PTO_Allowed_Engagement_Time** – 2057 This parameter sets the maximum time allowed for the solenoid to make one engagement attempt.
- **TEM_PTO_Lectra_Shift_Max_Retries** – 2058 This parameter allows the customer to establish the maximum number of times that the operator can request a PTO engagement per key cycle.
- **TEM_PTO_Lectra_Shift_Retry_Time** – 2059 This parameter sets the time between a failed engagement attempt and the time that the operator can attempt to engage the PTO again.

Note/s About Possible Software Feature Conflicts:
Only one PTO feature is allowed with 597200.
Also, 597281 conflicts with 597132, 597264, 597277, 597278, 597280, 597304, 597307
Additionally, 597283 conflicts with 597279

Parts Associated with This Feature:

PART NUMBER	DESCRIPTION
RPM OUTPUT TERMINAL KITS	
2585651C91	RPM TERMINAL KIT 12-GAUGE
2585423C91	RPM TERMINAL KIT 14-GAUGE
RPM BROWN 8–WAY CONNECTOR	

3548934C1	8–WAY CONNECTOR BODY
3534163C1	12-GAUGE TERMINAL
3535931C1	14-GAUGE TERMINAL
3535930C1	16 & 18-GAUGE TERMINAL
3548945C1	12 & 14-GAUGE CABLE SEAL
3535937C1	16 & 18-GAUGE CABLE SEAL
3548943C1	CONNECTOR LOCK
3573833C1	CAP LOCK
3535938C1	CAVITY PLUG
RPM 23-WAY CONNECTOR	
3677559C1	23-WAY CONNECTOR
1698937C1	16, 18, 20-GAUGE TERMINAL
1688285C1	CAVITY PLUG

Parts Associated with Feature

How to Test This Feature:
1. Depress the PTO switch in the cab to the ON position. Ensure that all PTO interlock conditions are enabled (as programmed in the Diamond Logic® Builder software).
2. Verify that the pin labeled PTO_Lectra-Shift_Retaining_Solenoid_Output of the Brown 8-way Remote
Power Module output connector has battery voltage level present.
3. Verify that the RPM input labeled PTO_Feedback_Switch (pin position specified by the Diamond Logic® Builder software) is receiving the correct voltage (12V or GND) as specified by the programmable
Parameter 2147 in the Diamond Logic® Builder software.
4. Make certain that the switch indicator lights are functioning by engaging the PTO and verifying that the
green light in the top section of the switch illuminates.
5. Make certain that the PTO indicator light in the gauge cluster is functioning by engaging the PTO.
6. The audible alarm can be tested by activating a vehicle condition that will sound the alarm based upon the settings of the programmable parameters. For example, if the park brake interlock is programmed on,
release the park brake and engage the PTO. The audible alarms should sound with continuous beeps.

Note: This feature uses body controller-based software controls which can be diagnosed with The International® Diamond Logic® Builder software (see local dealer if not owned).

References:
Refer to the applicable International® Circuit Diagrams and Service Manuals.

33.8. 60ABE: BDY INTG, PTO ACCOMMODATION for Electric over Hydraulic PTO, With Switch Mounted on Dash, Includes Audible Alarm, and Indicator Light in Gauge Cluster (Requires one RPM input and one output). This feature does Not Include Solenoids.

Note: Not compatible with T14 Transmission

Feature Applicability to Vehicle Platforms:

- Heavy Vocational (HV)
- Medium Vocational (MV)
- Heavy Extreme (HX) 2021 and Newer

Extended Description: This feature provides a 2-position, latched switch in a switch pack to drive one RPM output to engage an Electric Over Hydraulic PTO. This feature utilizes a customer-mounted PTO feedback switch wired to an RPM input to drive an indicator light in the gauge cluster that allows the operator to determine that the PTO is engaged. An audible alarm is used to warn the operator when the PTO is engaged during unsafe vehicle operating conditions such as when the park brake is released, or the engine speed is too high. Operating limits are established through programmable parameters that are set in the Body Controller (BCM). The RPM input also drives a PTO hour meter to allow the operator to measure stationary PTO hours for maintenance records and fuel tax purposes. To view the PTO hour meter, press the gauge cluster display selector button momentarily until the text portion of the display indicates “PTO. Hour.”

The PTO alarms are controlled by programmable parameters set in the Body Controller (BCM). Factory default settings for these programmable parameters are listed in the tables below.

Please use the Diamond Logic® Builder software to determine pin locations for RPM inputs and outputs (refer to the CONNECTOR screen view) and to set programmable parameters (refer to the FEATURE screen view).

System Block Diagram:

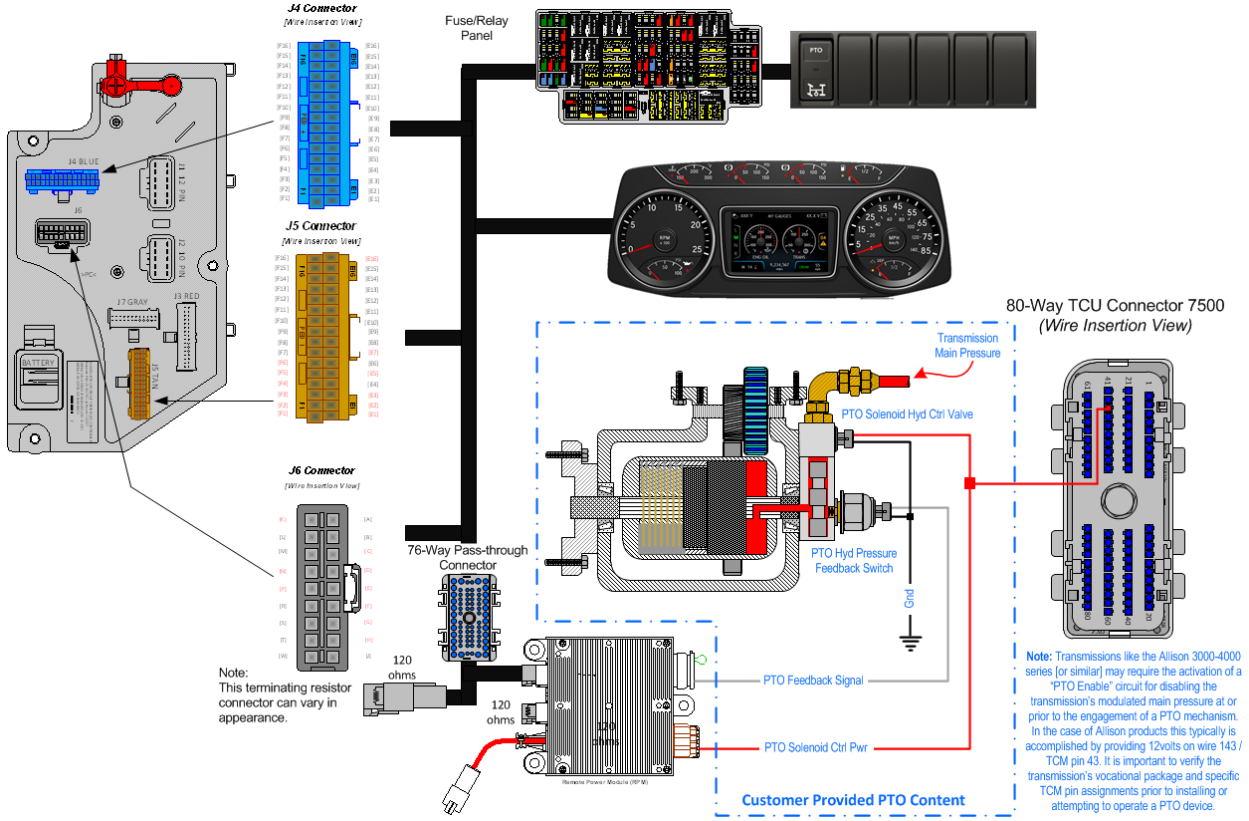

Note: Transmissions as the Allison automatic series [or similar] may require the activation of a "PTO Enable" circuit for disabling the transmission's modulated main pressure at or prior to the engagement of a PTO mechanism. In the case of Allison products this typically is accomplished by providing 12volts on wire 143 / TCM pin 43. It is important to verify the transmission's vocational package and specific TCM pin assignments prior to installing or attempting to operate a PTO device. It is important to ensure the Power Take Off (PTO) internal shift mechanism has adequate hydraulic potential communication for the full engagement of the PTO coupling/decoupling mechanism. Full engagement is typically a function of the available hydraulic potential sourced from the transmission's main discharge pump [or equivalent] supply system which [can] limit the full power transmission capabilities of the PTO coupling and decoupling mechanism/s.

Software Feature Codes:

- 597200 - BCM PROG, **PTO CONTROL LOGIC for Dash Switch**
- 597304 - BCM PROG, **PTO SHIFT FOR HYD CLUTCH**
- 597282 - BCM PROG, **PTO HOURMETER HRS DISPLAYED IP**
- 597283 - BCM PROG, **PTO MONITOR INDICATOR & ALARM**
- **Note: Feature 16WLM is part of 60ABE**
- **Note: if Eaton® Procision™ or Endurant™ Transmission is being used add:**
  - **597276 – BCM PROG, PTO ENABLER J1939 Engagement Consent for Eaton® Procision™ and Endurant™**

Body Controller Software Feature Code Parameters:

Parameter	ID	Description	Default	Units	Min	Max	Step
On – Indicates a 1 is set for the parameter							
Off – Indicates a 0 is set in for this parameter							
ENGAGEMENT PARAMETERS							
TEM_PTO_PK_Brake_Engmnt_Inhib	2087	If this Parameter is 1, the PTO will not be engaged if the Park Brake is not set.	OFF	N/A	N/A	N/A	N/A
TEM_PTO_Non_Neut_Engmnt_Inhib	2088	If this Parameter is 1, the PTO will not be engaged if the Transmission is not in Neutral or Park	OFF	N/A	N/A	N/A	N/A
TEM_PTO_Neut_Engmnt_Inhib	2089	If this Parameter is 1, the PTO will only be engaged if the Transmission is not in Neutral or Park	OFF	N/A	N/A	N/A	N/A
TEM_PTO_Veh_Spd_Engmnt_Inhib	2090	If this Parameter is 1, the PTO will not be engaged if the vehicle speed is over the value set in TEM_PTO_Veh_Spd_Engmnt_Limit	ON	N/A	N/A	N/A	N/A
TEM_PTO_Veh_Spd_Engmnt_Limit	2091	See TEM_PTO_Veh_Spd_Engmnt_Inhib	3.00	MPH	1	100	1
TEM_PTO_Eng_Spd_Engmnt_Inhib	2092	If this Parameter is 1, the PTO will not be engaged if the engine speed is over the value set in TEM_PTO_Eng_Spd_Engmnt_Limit	ON	N/A	N/A	N/A	N/A
TEM_PTO_Eng_Spd_Engmnt_Limit	2093	See TEM_PTO_Eng_Spd_Engmnt_Inhib	1000	RPM	100	5000	0.1
TEM_PTO_Cltch_Engmnt_Inhib	2094	If this Parameter is 1, the PTO will not be engaged if the clutch pedal is not depressed	OFF	N/A	N/A	N/A	N/A
TEM_PTO_Brake_Engmnt_Inhib	2095	If this Parameter is 1, the PTO will not be engaged if the brake pedal is not depressed	OFF	N/A	N/A	N/A	N/A
TEM_PTO_Eng_Run_Engmnt_Inhib	2096	If this Parameter is 1, the PTO will not be engaged if the engine is not running	OFF	N/A	N/A	N/A	N/A
TEM_PTO_Air_Pres_Engmnt_Inhib	2097	If this Parameter is 1, the PTO will not be engaged if the primary vehicle air pressure is below TEM_PTO_Air_Pres_Engmnt_Limit	OFF	N/A	N/A	N/A	N/A
TEM_PTO_Air_Pres_Engmnt_Limit	2098	See TEM_PTO_Air_Pres_Engmnt_Inhib	90	PSI	1	500	1

TEM_PTO_Mast_Switch_Engmnt_Inhib	2099	If this Parameter is 1, the PTO will not be engaged if the vehicle master switch is not ON.	OFF	N/A	N/A	N/A	N/A
DISENGAGEMENT PARAMETERS							
TEM_PTO_Pk_Brake_Disengages	2108	if this Parameter is 1, the PTO will be disengaged if the Park Brake is released	OFF	N/A	N/A	N/A	N/A
TEM_PTO_Non_Neut_Disengages	2109	if this Parameter is 1, the PTO will be disengaged if the transmission is taken out of neutral	OFF	N/A	N/A	N/A	N/A
TEM_PTO_Veh_Spd_Disengages	2110	if this Parameter is 1, the PTO will be disengaged if the vehicle speed is over the value set in TEM_PTO_Veh_Spd_DisEng_Limit	OFF	N/A	N/A	N/A	N/A
TEM_PTO_Veh_Spd_DisEng_Limit	2111	see TEM_PTO_Veh_Spd_Disengages	3	MPH	3	100	1
TEM_PTO_Eng_Spd_Disengages	2112	if this Parameter is 1, the PTO will be disengaged if the vehicle speed is over the value set in TEM_PTO_Eng_Spd_DisEng_Limit	ON	N/A	N/A	N/A	N/A
TEM_PTO_Eng_Spd_DisEng_Limit	2113	see TEM_PTO_Eng_Spd_Disengages	1800	RPM	0	5000	1
TEM_PTO_Eng_Run_Disengages	2114	If this Parameter is 1, the PTO will be disengaged if the engine is turned off	OFF	N/A	N/A	N/A	N/A
TEM_PTO_Air_Pres_Disengages	2115	if this Parameter is 1, the PTO will be disengaged if the primary air pressure is below the value set in TEM_PTO_Air_Pres_DisEng_Limit	OFF	N/A	N/A	N/A	N/A
TEM_PTO_Air_Pres_DisEng_Limit	2116	see TEM_PTO_Air_Pres_Disengages	80	PSI	0	500	1
TEM_PTO_Ext_Input_Disengages	2117	if this Parameter is 1, the PTO will be disengaged if the external input designated for this purpose is active	OFF	N/A	N/A	N/A	N/A
TEM_PTO_Mast_Switch_Disengages	2118	if this Parameter is 1, the PTO will be disengaged if the vehicle master switch is not ON	OFF	N/A	N/A	N/A	N/A
RE-ENGAGEMENT PARAMETERS							
TEM_PTO_Key_State_Allow_ReEng	2069	If this parameter is set, the PTO will be allowed to reengage when the key state is returned to run.	OFF	N/A	N/A	N/A	N/A
TEM_PTO_Veh_Spd_Allow_ReEng	2119	if this Parameter is 1, the PTO will be reengaged after a disengage due to vehicle overspeed when the vehicle speed is below TEM_PTO_Veh_Spd_Engmnt_Limit	OFF	N/A	N/A	N/A	N/A
TEM_PTO_Eng_Spd_Allow_ReEng	2120	if this Parameter is 1, the PTO will be reengaged after a disengage due to engine overspeed when the engine speed is below TEM_PTO_Eng_Spd_Engmnt_Limit	ON	N/A	N/A	N/A	N/A
TEM_PTO_Ext_Input_Allow_ReEng	2121	if this Parameter is 1, the PTO will be reengaged after a disengage due to the designated external input when the external input is no longer active	OFF	N/A	N/A	N/A	N/A
TEM_PTO_Eng_Run_Allow_ReEng	2122	if this Parameter is 1, the PTO will be reengaged after a disengage due	OFF	N/A	N/A	N/A	N/A

		to the engine stopping when the engine is restarted					
TEM_PTO_Mast_Swtch_Allow_ReEng	2123	if this Parameter is 1, the PTO will be reengaged after a disengage due to the master switch being turned off when the master switch is turned on again	OFF	N/A	N/A	N/A	N/A
TEM_PTO_Air_Pres_Allow_ReEng	2124	if this Parameter is 1, the PTO will be reengaged after a disengage due to low vehicle air pressure when the primary air pressure is over TEM_PTO_Air_Pres_Engmnt_Limit	OFF	N/A	N/A	N/A	N/A
TEM_PTO_Non_Neut_Allow_ReEng	2148	if this Parameter is 1, the PTO will be reengaged after a disengage due to transmission out of neutral when the transmission is placed back into neutral.	OFF	N/A	N/A	N/A	N/A
TEM_PTO_Pk_Brake_Allow_ReEng	2149	if this Parameter is 1, the PTO will be reengaged after a disengage due to park brake released when the park brake is reapplied.	OFF	N/A	N/A	N/A	N/A
ALARMS PARAMETERS							
TEM_PTO_Pk_Brake_Alarms	2131	if this Parameter is 1, an alarm will sound if the PTO is engaged, and the park brake is released	OFF	N/A	N/A	N/A	N/A
TEM_PTO_Non_Neut_Alarms	2132	if this Parameter is 1, an alarm will sound if the PTO is engaged, and transmission is taken out of neutral	OFF	N/A	N/A	N/A	N/A
TEM_PTO_Veh_Spd_Alarms	2133	if this Parameter is 1, an alarm will sound if the PTO is engaged, and the vehicle speed is over TEM_PTO_Veh_Spd_Alarm_Limit	ON	N/A	N/A	N/A	N/A
TEM_PTO_Veh_Spd_Alarm_Limit	2134	See TEM_PTO_Veh_Spd_Alarms	3	MPH	3	100	1
TEM_PTO_Eng_Spd_Alarms	2135	if this Parameter is 1, an alarm will sound if the PTO is engaged, and the engine speed is over TEM_PTO_Eng_Spd_Alarm_Limit	ON	N/A	N/A	N/A	N/A
TEM_PTO_Eng_Spd_Alarm_Limit	2136	See TEM_PTO_Eng_Spd_Alarms	1400	RPM	0	5000	0.1
TEM_PTO_Eng_Run_Alarms	2137	if this Parameter is 1, an alarm will sound if the PTO is engaged, and the engine is turned off	OFF	N/A	N/A	N/A	N/A
TEM_PTO_Air_Pres_Alarms	2138	if this Parameter is 1, an alarm will sound if the primary air pressure is below TEM_PTO_Air_Pres_Alarm_Limit	OFF	N/A	N/A	N/A	N/A
TEM_PTO_Air_Pres_Alarm_Limit	2139	See TEM_PTO_Air_Pres_Alarms	0	PSI	0	500	1
TEM_RPM_PTO_Engaged_Param	2147	Active State for the TEM PTO engagement feedback switch.	0	No Units	0	3	1
Unique for 597304 - BCM PROG, **PTO SHIFT FOR HYD CLUTCH**							
TEM_Hyd_PTO_Engagement_Out_Param	1993	This is the fuse level of the Hydraulic PTO FET	20	Amps	0	20	0.1

Parameter Definitions:

- **ENGAGEMENT PARAMETERS**

  These parameters set rules that must be met for the PTO to be engaged.

  Example: If TEM_PTO_Air_Pres_Engmnt_Inhib parameter is turned on, the PTO cannot be engaged if the primary vehicle air pressure is below the programmable parameter set by TEM_PTO_Air_Pres_Engmnt_Limit.

  for Dash Switch

- **TEM_PTO_PK_Brake_Engmnt_Inhib** – 2087 If this parameter is turned on, then the brake pedal must be depressed for the PTO to engage.
- **TEM_PTO_Non_Neut_Engmnt_Inhib** – 2088 If this parameter is turned on, then the transmission must be in Neutral or Park for the PTO to be engaged.
- **TEM_PTO_Neut_Engmnt_Inhib** – 2089 If this parameter is turned on, then the PTO can only be engaged if the transmission is NOT in Neutral or Park.
- **TEM_PTO_Veh_Spd_Engmnt_Inhib** – 2090 If this parameter is turned on, then the PTO cannot be engaged if the vehicle speed is over the value prescribed by TEM_PTO_Veh_Spd_Engmnt_Limit.
- **TEM_PTO_Veh_Spd_Engmnt_Limit** – 2091 This parameter sets the physical value for the Vehicle Speed Inhibit.
- **TEM_PTO_Eng_Spd_Engmnt_Inhib** –2092 If this is parameter is turned on, then the PTO cannot be engaged if the engine speed is over a certain threshold, which is defined as a programmable parameter in TEM_PTO_Eng_Spd_Engmnt_Limit.
- **TEM_PTO_Eng_Spd_Engmnt_Limit** – 2093 This parameter sets the physical value for the Engine Speed Inhibit.
- **TEM_PTO_Cltch_Engmnt_Inhib** – 2094 If this parameter is turned on, then the clutch pedal must be depressed for the PTO to engage.
- **TEM_PTO_Brake_Engmnt_Inhib** – 2095 If this parameter is turned on, then the brake pedal must be depressed for the PTO to engage.
- **TEM_PTO_Eng_Run_Engmnt_Inhib** – 2096 If this parameter is turned on, then the engine must be running for the PTO to be engaged.
- **TEM_PTO_Air_Pres_Engmnt_Inhib** – 2097 If this parameter is turned on, the PTO cannot be engaged if the primary vehicle air pressure is below the programmable parameter set by TEM_PTO_Air_Pres_Engmnt_Limit.
- **TEM_PTO_Air_Pres_Engmnt_Limit** – 2098 This parameter sets the physical value for the Air Pressure Inhibit.
- **TEM_PTO_Mast_Swtch_Engmnt_Inhib** – 2099 If this parameter is turned on, then the PTO will not be engaged if the vehicle master switch is not ON.

- **DISENGAGEMENT PARAMETERS**

  These parameters set the conditions under which the PTO will be disengaged.

- **TEM_PTO_Pk_Brake_Disengages** – 2108 If this parameter is turned on, then the PTO will be disengaged if the Park Brake is released.

- **TEM_PTO_Non_Neut_Disengages** – 2109 If this parameter is turned on, then the PTO will be disengaged if the transmission is taken out of neutral.
- **TEM_PTO_Veh_Spd_Disengages** – 2110 If this parameter is turned on, then the PTO will be disengaged if the vehicle speed is over the valued specified by TEM_PTO_Veh_Spd_DisEng_Limit.
- **TEM_PTO_Veh_Spd_DisEng_Limit** – 2111 This parameter sets the physical value for the Vehicle Speed disengagement.
- **TEM_PTO_Eng_Spd_Disengages** – 2112 If this parameter is turned on, then the PTO will be disengaged if the engine speed rises above the value set by TEM_PTO_Eng_Spd_DisEng_Limit.
- **TEM_PTO_Eng_Spd_DisEng_Limit** – 2113 This parameter sets the physical value for the Engine Speed disengagement.
- **TEM_PTO_Eng_Run_Disengages** – 2114 If this parameter is turned on, then the PTO will be disengaged if the engine is turned off.
- **TEM_PTO_Air_Pres_Disengages** – 2115 If this parameter is turned on, then the PTO will be disengaged if the primary air pressure is below the value set in TEM_PTO_Air_Pres_DisEng_Limit.
- **TEM_PTO_Air_Pres_DisEng_Limit** – 2116 This parameter sets the physical value for the Air Pressure disengagement.
- **TEM_PTO_Ext_Input_Disengages** – 2117 If this parameter is turned on, then the PTO will be disengaged if the external input designated for this purpose is active.
- **TEM_PTO_Mast_Swtch_Disengages** – 2118 If this parameter is turned on, then the PTO will be disengaged if the vehicle master switch is not ON.
- **Re-ENGAGEMENT PARAMETERS**
  These parameters set the conditions under which the PTO will be re-engaged due to a parameter disengagement.
- **TEM_PTO_Key_State_Allow_ReEng** – 2069 If this parameter is turned on, then the PTO will be allowed to reengage when the key state is returned to run.
- **TEM_PTO_Veh_Spd_Allow_ReEng** – 2119 If this parameter is turned on, then the PTO will be reengaged (after disengagement due to the vehicle being over the vehicle speed value) when the vehicle speed falls below TEM_PTO_Veh_Spd_Engmnt_Limit.
- **TEM_PTO_Eng_Spd_Allow_ReEng** – 2120 If this parameter is turned on, then the PTO will be reengaged (after disengagement due to engine overspeed) when the engine speed falls below TEM_PTO_Eng_Spd_Engmnt_Limit.
- **TEM_PTO_Ext_Input_Allow_ReEng** – 2121 If this parameter is turned on, then the PTO will be reengaged (after a disengage due to the designated external input being in active state) when the external input is no longer in active state.
- **TEM_PTO_Eng_Run_Allow_ReEng** – 2122 If this parameter is turned on, then the PTO will be reengaged (after disengagement due to engine stopping) when the engine is restarted.

- **TEM_PTO_Mast_Swtch_Allow_ReEng** – 2123 If is turned on, then the PTO will be reengaged after a disengage due to the master switch being turned off when the master switch is turned on again.
- **TEM_PTO_Air_Pres_Allow_ReEng** – 2124 If this parameter is turned on, then the PTO will be reengaged (after disengagement due to low air pressure) when the primary air pressure rises about the value specified by TEM_PTO_Air_Pres_Engmnt_Limit.
- **TEM_PTO_Non_Neut_Allow_ReEng** – 2148 If this parameter is turned on, then the PTO will be reengaged (after disengagement due to transmission out of neutral) when the transmission is placed back into neutral.
- **TEM_PTO_Pk_Brake_Allow_ReEng** – 2149 If this parameter is turned on, then the PTO will be reengaged (after disengagement due to park brake released) when the park brake is reapplied.
- **ALARM PARAMETERS**
  These parameters utilize the gauge cluster to sound an alarm to the driver when certain programmable parameters are violated.
- **TEM_PTO_Pk_Brake_Alarms** – If this parameter is turned on, then an audible alarm will sound in the cab if the PTO is engaged, and the park brake is released.
- **TEM_PTO_Non_Neut_Alarms** – 2132 If this parameter is turned on, then an audible alarm will sound in the cab if the PTO is engaged, and the transmission is taken out of neutral.
- **TEM_PTO_Veh_Spd_Alarms** – 2133 If this is turned on, then an audible alarm will sound if the PTO is engaged, and the vehicle speed is over the value set by TEM_PTO_Veh_Spd_Alarm_Limit
- **TEM_PTO_Veh_Spd_Alarm_Limit** – 2134 This parameter sets the physical value for the Vehicle Speed Alarm.
- **TEM_PTO_Eng_Spd_Alarms** – 2135 If this is turned on, then an alarm will sound if the PTO is engaged, and the engine speed is over the value set by TEM_PTO_Eng_Spd_Alarm_Limit
- **TEM_PTO_Eng_Spd_Alarm_Limit** – 2136 This parameter sets the physical value for the Engine Speed Alarm.
- **TEM_PTO_Eng_Run_Alarms** – 2137 If this parameter is turned on, then an audible alarm will sound in the cab if the PTO is engaged, and the engine is turned off.
- **TEM_PTO_Air_Pres_Alarms** – 2138 If this parameter is turned on, then an audible alarm will sound in the cab if the primary air pressure drops below the value specified by TEM_PTO_Air_Pres_Alarm_Limit.
- **TEM_PTO_Air_Pres_Alarm_Limit** – 2139 This parameter sets the physical value for the Air Pressure Alarm.

- **TEM_RPM_PTO_Engaged_Param** – 2147 This parameter indicates the active state that the body controller (BCM) will read as active for the TEM PTO feedback switch (as it goes into the RPM input). This active state will be used to indicate when the PTO is engaged:
    - 0 = Input active when open circuit
    - 1 = Input active when grounded
    - 2 = not used
    - 3 = Input active when at 12V

- **Parameters unique to 597304 - PTO SHIFT FOR HYD CLUTCH**
- **TEM_Hyd_PTO_Engagement_Out_Param** – 1993 This parameter sets the current at which the Body Controller will fuse the Remote Power Module output that drives the engagement of the PTO. This is used to define the maximum amount of current that can flow through the Remote Power Module output.

Note/s About Possible Software Feature Conflicts:
Only one PTO feature is allowed with 597200.
Also, 597304 conflicts with 597132, 597264, 597277, 597278, 597280, 597281, 597307
Additionally, 597283 conflicts with 597279

Parts Associated with This Feature:

PART NUMBER	DESCRIPTION
RPM OUTPUT TERMINAL KITS	
2585651C91	RPM TERMINAL KIT 12-GAUGE
2585423C91	RPM TERMINAL KIT 14-GAUGE
RPM BROWN 8–WAY CONNECTOR	
3548934C1	8–WAY CONNECTOR BODY
3534163C1	12-GAUGE TERMINAL
3535931C1	14-GAUGE TERMINAL
3535930C1	16 & 18-GAUGE TERMINAL
3548945C1	12 & 14-GAUGE CABLE SEAL
3535937C1	16 & 18-GAUGE CABLE SEAL
3548943C1	CONNECTOR LOCK
3573833C1	CAP LOCK
3535938C1	CAVITY PLUG
RPM 23-WAY CONNECTOR	
3677559C1	23-WAY CONNECTOR
1698937C1	16, 18, 20-GAUGE TERMINAL
1688285C1	CAVITY PLUG

Parts Associated with Feature

How to Test This Feature:
1. To determine if the PTO is working, depress the PTO switch in the cab to the on position. Ensure that all interlock conditions are enabled (as programmed in the Diamond Logic® Builder software).
2. Verify that the pin labeled PTO_Output on the brown 8-way Remote Power Module output connector has the battery voltage level present.
3. Verify that the RPM input labeled PTO_Feedback_Switch (pin position specified by the Diamond Logic® Builder software) is receiving the correct voltage (12V or GND) as specified by the programmable
Parameter 2147 in the Diamond Logic® Builder software.
4. Make certain that the indicator light in the top section of the PTO switch illuminates by engaging the PTO.
5. Make certain that the PTO indicator light in the gauge cluster illuminates by engaging the PTO.
6. The Audible Alarm can be tested by violating the set programmable parameters and determining if the
Alarm sounds. For example: If the park brake interlock is programmed ON, release the park brake and
engage the PTO. The audible alarm should sound with continuous beeps.

Note: This feature uses body controller-based software controls which can be diagnosed with The International® Diamond Logic® Builder software (see local dealer if not owned).

References:
Refer to the applicable International® Circuit Diagrams and Service Manuals.

33.9. 60ABK: BDY INTG, PTO ACCOMMODATION. Accommodation for Electric over Air, Non-Clutched PTO Engagement and Disengagement does not Include Air Solenoid, With Switch Mounted on Dash, Includes Audible Alarm, and Indicator Light in Gauge Cluster (requires one RPM input and one output).

Note: Not compatible with T14 Transmission

Feature Applicability to Vehicle Platforms:

- Heavy Vocational (HV)
- Medium Vocational (MV)
- Heavy Extreme (HX) 2021 and Newer

Extended Description: This feature provides a momentary switch in the in-cab switch pack to drive an RPM output to engage an Electric over Air, Non-Clutched PTO. An RPM input is used to drive an indicator light in the gauge cluster to indicate when the PTO is engaged. An audible alarm sounds when certain programmable parameters are violated. The RPM input also drives a PTO hour meter to allow the operator to measure stationary PTO hours for maintenance records and fuel tax purposes. To view the hour meter, press the gauge cluster selection button momentarily until the text portion of the display indicates “PTO Hour.”

The Non-Clutched air-shifted PTO is a gear-to-gear engagement mechanism. Very specific transmission operating modes are required to allow safe engagement of the PTO. The PTO gear in the transmission must be stopped before engagement of the PTO should be attempted. The clutch must be depressed with the vehicle parked to engage the PTO for a manual transmission. An automatic transmission must be in any driving gear with vehicle parked to engage the PTO. Engagement, disengagement, and re-engagement parameters should be set according to the type of transmission where the Non-Clutched PTO is mounted.

The PTO alarms are controlled by programmable parameters set in the BCM. Through these programmable parameters, the vehicle owner can customize the functionality of the PTO. Factory default settings for these programmable parameters are listed in the tables below.

Please use the Diamond Logic® Builder software to determine pin locations for RPM inputs and outputs (refer to the CONNECTOR screen view) and to set programmable parameters (refer to the FEATURE screen view).

All re-engagement parameters for Non-Clutched PTOs are defaulted OFF. These parameters are defaulted to OFF because reengaging a Non-Clutched PTO automatically (after it has disengaged) could cause the gears to grind and damage the PTO.

System Block Diagram:

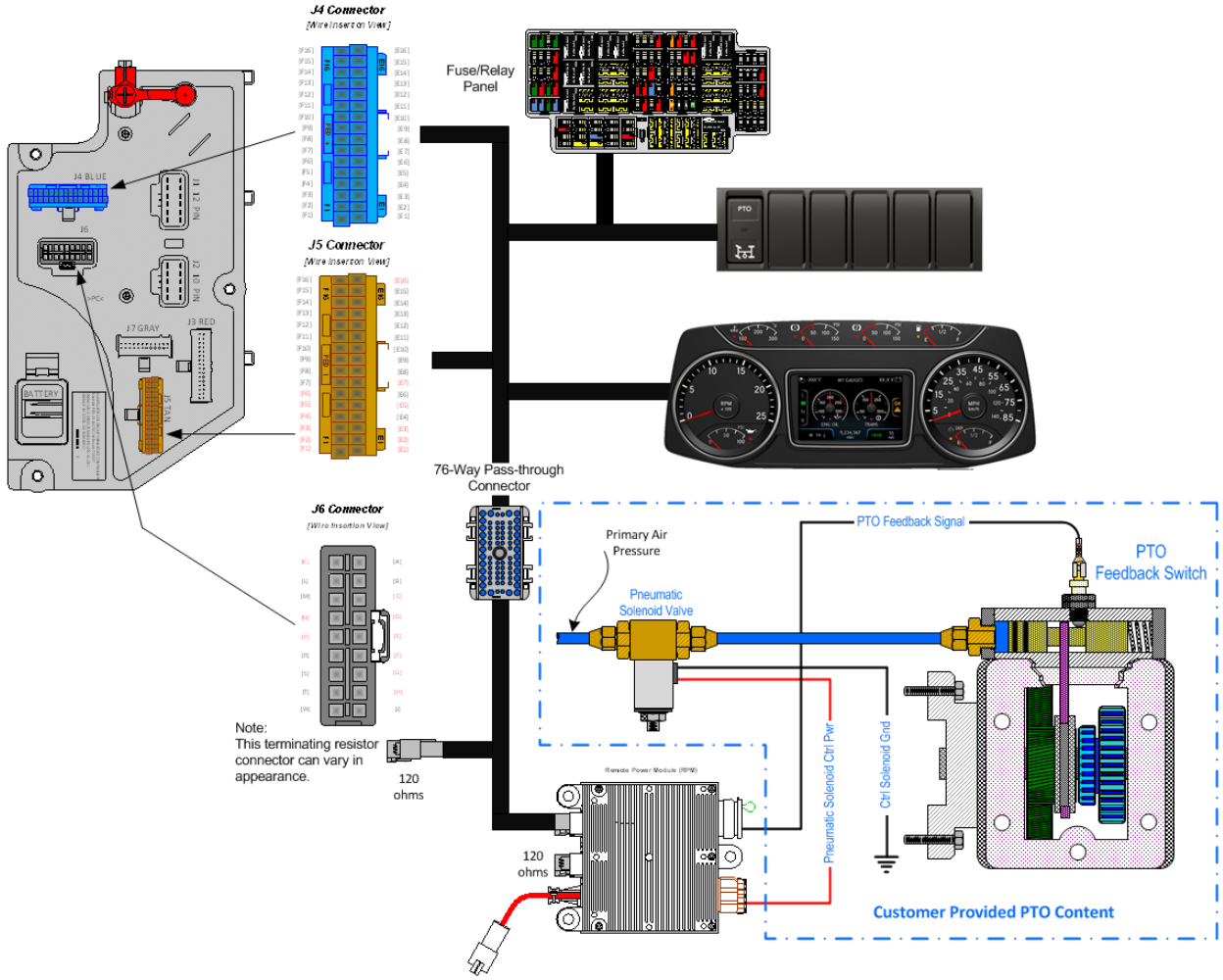

Note: It is important to ensure the Power Take Off (PTO) internal shift mechanism has adequate pneumatic potential communication for the full engagement of the PTO coupling/decoupling mechanism. Full engagement is typically a function of the available pneumatic potential sourced from the chassis primary air pressure supply system which [can] limit the full power transmission capabilities of the PTO coupling and decoupling mechanism/s.

Body Controller Software Feature Codes:

- 597200 - BCM PROG, **PTO CONTROL LOGIC for Dash Switch**
- 597280 - BCM PROG, **PTO SHIFT with Pneumatic Non-Clutch Engagement**

- 597282 - BCM PROG, **PTO HOURMETER HRS DISPLAYED IP**
- 597283 - BCM PROG, **PTO MONITOR INDICATOR & ALARM** (failure to add this feature will result in an OBD fault condition)
- **Note: Feature 16WLM is part of 60ABK**
- **Note: if Eaton® Procision™ or Endurant™ Transmission is being used add:**
    - **597276 – BCM PROG, PTO ENABLER J1939 Engagement Consent for Eaton® Procision™ and Endurant™**

Body Controller Software Feature Code Parameters:

Parameter	ID	Description	Default	Units	Min	Max	Step
On – Indicates a 1 is set for the parameter							
Off – Indicates a 0 is set in for this parameter							
ENGAGEMENT PARAMETERS							
TEM_PTO_PK_Brake_Engmnt_Inhib	2087	If this Parameter is 1, the PTO will not be engaged if the Park Brake is not set.	OFF	N/A	N/A	N/A	N/A
TEM_PTO_Non_Neut_Engmnt_Inhib	2088	If this Parameter is 1, the PTO will not be engaged if the Transmission is not in Neutral or Park	OFF	N/A	N/A	N/A	N/A
TEM_PTO_Neut_Engmnt_Inhib	2089	If this Parameter is 1, the PTO will only be engaged if the Transmission is not in Neutral or Park	OFF	N/A	N/A	N/A	N/A
TEM_PTO_Veh_Spd_Engmnt_Inhib	2090	If this Parameter is 1, the PTO will not be engaged if the vehicle speed is over the value set in TEM_PTO_Veh_Spd_Engmnt_Limit	ON	N/A	N/A	N/A	N/A
TEM_PTO_Veh_Spd_Engmnt_Limit	2091	See TEM_PTO_Veh_Spd_Engmnt_Inhib	3.00	MPH	1	100	1
TEM_PTO_Eng_Spd_Engmnt_Inhib	2092	If this Parameter is 1, the PTO will not be engaged if the engine speed is over the value set in TEM_PTO_Eng_Spd_Engmnt_Limit	ON	N/A	N/A	N/A	N/A
TEM_PTO_Eng_Spd_Engmnt_Limit	2093	See TEM_PTO_Eng_Spd_Engmnt_Inhib	1000	RPM	100	5000	0.1
TEM_PTO_Cltch_Engmnt_Inhib	2094	If this Parameter is 1, the PTO will not be engaged if the clutch pedal is not depressed	OFF	N/A	N/A	N/A	N/A
TEM_PTO_Brake_Engmnt_Inhib	2095	If this Parameter is 1, the PTO will not be engaged if the brake pedal is not depressed	OFF	N/A	N/A	N/A	N/A
TEM_PTO_Eng_Run_Engmnt_Inhib	2096	If this Parameter is 1, the PTO will not be engaged if the engine is not running	OFF	N/A	N/A	N/A	N/A
TEM_PTO_Air_Pres_Engmnt_Inhib	2097	If this Parameter is 1, the PTO will not be engaged if the primary vehicle air pressure is below TEM_PTO_Air_Pres_Engmnt_Limit	OFF	N/A	N/A	N/A	N/A
TEM_PTO_Air_Pres_Engmnt_Limit	2098	See TEM_PTO_Air_Pres_Engmnt_Inhib	90	PSI	1	500	1
TEM_PTO_Mast_Swtch_Engmnt_Inhib	2099	If this Parameter is 1, the PTO will not be engaged if the vehicle master switch is not ON.	OFF	N/A	N/A	N/A	N/A
DISENGAGEMENT PARAMETERS							

TEM_PTO_Pk_Brake_Disengages	2108	if this Parameter is 1, the PTO will be disengaged if the Park Brake is released	OFF	N/A	N/A	N/A	N/A
TEM_PTO_Non_Neut_Disengages	2109	if this Parameter is 1, the PTO will be disengaged if the transmission is taken out of neutral	OFF	N/A	N/A	N/A	N/A
TEM_PTO_Veh_Spd_Disengages	2110	if this Parameter is 1, the PTO will be disengaged if the vehicle speed is over the value set in TEM_PTO_Veh_Spd_DisEng_Limit	OFF	N/A	N/A	N/A	N/A
TEM_PTO_Veh_Spd_DisEng_Limit	2111	see TEM_PTO_Veh_Spd_Disengages	3	MPH	3	100	1
TEM_PTO_Eng_Spd_Disengages	2112	if this Parameter is 1, the PTO will be disengaged if the vehicle speed is over the value set in TEM_PTO_Eng_Spd_DisEng_Limit	ON	N/A	N/A	N/A	N/A
TEM_PTO_Eng_Spd_DisEng_Limit	2113	see TEM_PTO_Eng_Spd_Disengages	1800	RPM	0	5000	1
TEM_PTO_Eng_Run_Disengages	2114	If this Parameter is 1, the PTO will be disengaged if the engine is turned off	OFF	N/A	N/A	N/A	N/A
TEM_PTO_Air_Pres_Disengages	2115	if this Parameter is 1, the PTO will be disengaged if the primary air pressure is below the value set in TEM_PTO_Air_Pres_DisEng_Limit	OFF	N/A	N/A	N/A	N/A
TEM_PTO_Air_Pres_DisEng_Limit	2116	see TEM_PTO_Air_Pres_Disengages	80	PSI	0	500	1
TEM_PTO_Ext_Input_Disengages	2117	if this Parameter is 1, the PTO will be disengaged if the external input designated for this purpose is active	OFF	N/A	N/A	N/A	N/A
TEM_PTO_Mast_Swtch_Disengages	2118	if this Parameter is 1, the PTO will be disengaged if the vehicle master switch is not ON	OFF	N/A	N/A	N/A	N/A
RE-ENGAGEMENT PARAMETERS							
TEM_PTO_Key_State_Allow_ReEng	2069	If this parameter is set, the PTO will be allowed to reengage when the key state is returned to run.	OFF	N/A	N/A	N/A	N/A
TEM_PTO_Veh_Spd_Allow_ReEng	2119	if this Parameter is 1, the PTO will be reengaged after a disengage due to vehicle overspeed when the vehicle speed is below TEM_PTO_Veh_Spd_Engmnt_Limit	OFF	N/A	N/A	N/A	N/A
TEM_PTO_Eng_Spd_Allow_ReEng	2120	if this Parameter is 1, the PTO will be reengaged after a disengage due to engine overspeed when the engine speed is below TEM_PTO_Eng_Spd_Engmnt_Limit	ON	N/A	N/A	N/A	N/A
TEM_PTO_Ext_Input_Allow_ReEng	2121	if this Parameter is 1, the PTO will be reengaged after a disengage due to the designated external input when the external input is no longer active	OFF	N/A	N/A	N/A	N/A
TEM_PTO_Eng_Run_Allow_ReEng	2122	if this Parameter is 1, the PTO will be reengaged after a disengage due to the engine stopping when the engine is restarted	OFF	N/A	N/A	N/A	N/A
TEM_PTO_Mast_Swtch_Allow_ReEng	2123	if this Parameter is 1, the PTO will be reengaged after a disengage due to the master switch being turned off	OFF	N/A	N/A	N/A	N/A

		when the master switch is turned on again					
TEM_PTO_Air_Pres_Allow_ReEng	2124	if this Parameter is 1, the PTO will be reengaged after a disengage due to low vehicle air pressure when the primary air pressure is over TEM_PTO_Air_Pres_Engmnt_Limit	OFF	N/A	N/A	N/A	N/A
TEM_PTO_Non_Neut_Allow_ReEng	2148	if this Parameter is 1, the PTO will be reengaged after a disengage due to transmission out of neutral when the transmission is placed back into neutral.	OFF	N/A	N/A	N/A	N/A
TEM_PTO_Pk_Brake_Allow_ReEng	2149	if this Parameter is 1, the PTO will be reengaged after a disengage due to park brake released when the park brake is reapplied.	OFF	N/A	N/A	N/A	N/A
ALARMS PARAMETERS							
TEM_PTO_Pk_Brake_Alarms	2131	if this Parameter is 1, an alarm will sound if the PTO is engaged, and the park brake is released	OFF	N/A	N/A	N/A	N/A
TEM_PTO_Non_Neut_Alarms	2132	if this Parameter is 1, an alarm will sound if the PTO is engaged, and transmission is taken out of neutral	OFF	N/A	N/A	N/A	N/A
TEM_PTO_Veh_Spd_Alarms	2133	if this Parameter is 1, an alarm will sound if the PTO is engaged, and the vehicle speed is over TEM_PTO_Veh_Spd_Alarm_Limit	ON	N/A	N/A	N/A	N/A
TEM_PTO_Veh_Spd_Alarm_Limit	2134	See TEM_PTO_Veh_Spd_Alarms	3	MPH	3	100	1
TEM_PTO_Eng_Spd_Alarms	2135	if this Parameter is 1, an alarm will sound if the PTO is engaged, and the engine speed is over TEM_PTO_Eng_Spd_Alarm_Limit	ON	N/A	N/A	N/A	N/A
TEM_PTO_Eng_Spd_Alarm_Limit	2136	See TEM_PTO_Eng_Spd_Alarms	1400	RPM	0	5000	0.1
TEM_PTO_Eng_Run_Alarms	2137	if this Parameter is 1, an alarm will sound if the PTO is engaged, and the engine is turned off	OFF	N/A	N/A	N/A	N/A
TEM_PTO_Air_Pres_Alarms	2138	if this Parameter is 1, an alarm will sound if the primary air pressure is below TEM_PTO_Air_Pres_Alarm_Limit	OFF	N/A	N/A	N/A	N/A
TEM_PTO_Air_Pres_Alarm_Limit	2139	See TEM_PTO_Air_Pres_Alarms	0	PSI	0	500	1
TEM_RPM_PTO_Engaged_Param	2147	Active State for the TEM PTO engagement feedback switch.	0	No Units	0	3	1
• Unique for 597280 - BCM PROG, **PTO SHIFT with Pneumatic Non-Clutch Engage**							
TEM_Hyd_PTO_Engagement_Out_Param	1993	This is the fuse level of the Hydraulic PTO FET	20	Amps	0	20	0.1

Parameter Definitions:

- **ENGAGEMENT PARAMETERS**

  These parameters set rules that must be met for the PTO to be engaged.

  In Example

If TEM_PTO_Air_Pres_Engmnt_Inhib parameter is turned on, the PTO cannot be engaged if the primary vehicle air pressure is below the programmable parameter set by TEM_PTO_Air_Pres_Engmnt_Limit. **for Dash Switch**

- **TEM_PTO_PK_Brake_Engmnt_Inhib** – 2087 If this parameter is turned on, then the brake pedal must be depressed for the PTO to engage.
- **TEM_PTO_Non_Neut_Engmnt_Inhib** – 2088 If this parameter is turned on, then the transmission must be in Neutral or Park for the PTO to be engaged.
- **TEM_PTO_Neut_Engmnt_Inhib** – 2089 If this parameter is turned on, then the PTO can only be engaged if the transmission is NOT in Neutral or Park.
- **TEM_PTO_Veh_Spd_Engmnt_Inhib** – 2090 If this parameter is turned on, then the PTO cannot be engaged if the vehicle speed is over the value prescribed by TEM_PTO_Veh_Spd_Engmnt_Limit.
- **TEM_PTO_Veh_Spd_Engmnt_Limit** – 2091 This parameter sets the physical value for the Vehicle Speed Inhibit.
- **TEM_PTO_Eng_Spd_Engmnt_Inhib** –2092 If this is parameter is turned on, then the PTO cannot be engaged if the engine speed is over a certain threshold, which is defined as a programmable parameter in TEM_PTO_Eng_Spd_Engmnt_Limit.
- **TEM_PTO_Eng_Spd_Engmnt_Limit** – 2093 This parameter sets the physical value for the Engine Speed Inhibit.
- **TEM_PTO_CItch_Engmnt_Inhib** – 2094 If this parameter is turned on, then the clutch pedal must be depressed for the PTO to engage.
- **TEM_PTO_Brake_Engmnt_Inhib** – 2095 If this parameter is turned on, then the brake pedal must be depressed for the PTO to engage.
- **TEM_PTO_Eng_Run_Engmnt_Inhib** – 2096 If this parameter is turned on, then the engine must be running for the PTO to be engaged.
- **TEM_PTO_Air_Pres_Engmnt_Inhib** – 2097 If this parameter is turned on, the PTO cannot be engaged if the primary vehicle air pressure is below the programmable parameter set by TEM_PTO_Air_Pres_Engmnt_Limit.
- **TEM_PTO_Air_Pres_Engmnt_Limit** – 2098 This parameter sets the physical value for the Air Pressure Inhibit.
- **TEM_PTO_Mast_Swtch_Engmnt_Inhib** – 2099 If this parameter is turned on, then the PTO will not be engaged if the vehicle master switch is not ON.
- **DISENGAGEMENT PARAMETERS**
  These parameters set the conditions under which the PTO will be disengaged.
- **TEM_PTO_Pk_Brake_Disengages** – 2108 If this parameter is turned on, then the PTO will be disengaged if the Park Brake is released.
- **TEM_PTO_Non_Neut_Disengages** – 2109 If this parameter is turned on, then the PTO will be disengaged if the transmission is taken out of neutral.

- **TEM_PTO_Veh_Spd_Disengages** – 2110 If this parameter is turned on, then the PTO will be disengaged if the vehicle speed is over the valued specified by TEM_PTO_Veh_Spd_DisEng_Limit.
- **TEM_PTO_Veh_Spd_DisEng_Limit** – 2111 This parameter sets the physical value for the Vehicle Speed disengagement.
- **TEM_PTO_Eng_Spd_Disengages** – 2112 If this parameter is turned on, then the PTO will be disengaged if the engine speed rises above the value set by TEM_PTO_Eng_Spd_DisEng_Limit.
- **TEM_PTO_Eng_Spd_DisEng_Limit** – 2113 This parameter sets the physical value for the Engine Speed disengagement.
- **TEM_PTO_Eng_Run_Disengages** – 2114 If this parameter is turned on, then the PTO will be disengaged if the engine is turned off.
- **TEM_PTO_Air_Pres_Disengages** – 2115 If this parameter is turned on, then the PTO will be disengaged if the primary air pressure is below the value set in TEM_PTO_Air_Pres_DisEng_Limit.
- **TEM_PTO_Air_Pres_DisEng_Limit** – 2116 This parameter sets the physical value for the Air Pressure disengagement.
- **TEM_PTO_Ext_Input_Disengages** – 2117 If this parameter is turned on, then the PTO will be disengaged if the external input designated for this purpose is active.
- **TEM_PTO_Mast_Swtch_Disengages** – 2118 If this parameter is turned on, then the PTO will be disengaged if the vehicle master switch is not ON.
- **Re-ENGAGEMENT PARAMETERS**
  These parameters set the conditions under which the PTO will be re-engaged due to a parameter disengagement.
- **TEM_PTO_Key_State_Allow_ReEng** – 2069 If this parameter is turned on, then the PTO will be allowed to reengage when the key state is returned to run.
- **TEM_PTO_Veh_Spd_Allow_ReEng** – 2119 If this parameter is turned on, then the PTO will be reengaged (after disengagement due to the vehicle being over the vehicle speed value) when the vehicle speed falls below TEM_PTO_Veh_Spd_Engmnt_Limit.
- **TEM_PTO_Eng_Spd_Allow_ReEng** – 2120 If this parameter is turned on, then the PTO will be reengaged (after disengagement due to engine overspeed) when the engine speed falls below TEM_PTO_Eng_Spd_Engmnt_Limit.
- **TEM_PTO_Ext_Input_Allow_ReEng** – 2121 If this parameter is turned on, then the PTO will be reengaged (after a disengage due to the designated external input being in active state) when the external input is no longer in active state.
- **TEM_PTO_Eng_Run_Allow_ReEng** – 2122 If this parameter is turned on, then the PTO will be reengaged (after disengagement due to engine stopping) when the engine is restarted.

- **TEM_PTO_Mast_Swtch_Allow_ReEng** – 2123 If is turned on, then the PTO will be reengaged after a disengage due to the master switch being turned off when the master switch is turned on again.
- **TEM_PTO_Air_Pres_Allow_ReEng** – 2124 If this parameter is turned on, then the PTO will be reengaged (after disengagement due to low air pressure) when the primary air pressure rises about the value specified by TEM_PTO_Air_Pres_Engmnt_Limit.
- **TEM_PTO_Non_Neut_Allow_ReEng** – 2148 If this parameter is turned on, then the PTO will be reengaged (after disengagement due to transmission out of neutral) when the transmission is placed back into neutral.
- **TEM_PTO_Pk_Brake_Allow_ReEng** – 2149 If this parameter is turned on, then the PTO will be reengaged (after disengagement due to park brake released) when the park brake is reapplied.
- **ALARM PARAMETERS**
  These parameters utilize the gauge cluster to sound an alarm to the driver when certain programmable parameters are violated.
- **TEM_PTO_Pk_Brake_Alarms** – If this parameter is turned on, then an audible alarm will sound in the cab if the PTO is engaged, and the park brake is released.
- **TEM_PTO_Non_Neut_Alarms** – 2132 If this parameter is turned on, then an audible alarm will sound in the cab if the PTO is engaged, and the transmission is taken out of neutral.
- **TEM_PTO_Veh_Spd_Alarms** – 2133 If this is turned on, then an audible alarm will sound if the PTO is engaged, and the vehicle speed is over the value set by TEM_PTO_Veh_Spd_Alarm_Limit
- **TEM_PTO_Veh_Spd_Alarm_Limit** – 2134 This parameter sets the physical value for the Vehicle Speed Alarm.
- **TEM_PTO_Eng_Spd_Alarms** – 2135 If this is turned on, then an alarm will sound if the PTO is engaged, and the engine speed is over the value set by TEM_PTO_Eng_Spd_Alarm_Limit
- **TEM_PTO_Eng_Spd_Alarm_Limit** – 2136 This parameter sets the physical value for the Engine Speed Alarm.
- **TEM_PTO_Eng_Run_Alarms** – 2137 If this parameter is turned on, then an audible alarm will sound in the cab if the PTO is engaged, and the engine is turned off.
- **TEM_PTO_Air_Pres_Alarms** – 2138 If this parameter is turned on, then an audible alarm will sound in the cab if the primary air pressure drops below the value specified by TEM_PTO_Air_Pres_Alarm_Limit.
- **TEM_PTO_Air_Pres_Alarm_Limit** – 2139 This parameter sets the physical value for the Air Pressure Alarm.

- **TEM_RPM_PTO_Engaged_Param** – 2147 This parameter indicates the active state that the body controller (BCM) will read as active for the TEM PTO feedback switch (as it goes into the RPM input). This active state will be used to indicate when the PTO is engaged:
    - 0 = Input active when open circuit
    - 1 = Input active when grounded
    - 2 = not used
    - 3 = Input active when at 12V

- **Parameters Unique to 597280 - PTO SHIFT with Pneumatic Non-Clutch**
- **TEM_Hyd_PTO_Engagement_Out_Param** – 1993 This parameter sets the current at which the Body Controller will fuse the Remote Power Module output that drives the engagement of the PTO. This is used to define the maximum amount of current that can flow through the Remote Power Module output.

Note/s About Possible Software Feature Conflicts:
Only one PTO feature is allowed with 597200.
Also, 597280 conflicts with 597132, 597264, 597277, 597278, 597281, 597304, 597307
Additionally, 597283 conflicts with 597279

Parts Associated with This Feature:

PART NUMBER	DESCRIPTION
RPM OUTPUT TERMINAL KITS	
2585651C91	RPMTERMINAL KIT 12-GAUGE
2585423C91	RPM TERMINAL KIT 14-GAUGE
RPM BROWN 8–WAY CONNECTOR	
3548934C1	8–WAY CONNECTOR BODY
3534163C1	12-GAUGE TERMINAL
3535931C1	14-GAUGE TERMINAL
3535930C1	16 & 18-GAUGE TERMINAL
3548945C1	12 & 14-GAUGE CABLE SEAL
3535937C1	16 & 18-GAUGE CABLE SEAL
3548943C1	CONNECTOR LOCK
3573833C1	CAP LOCK
3535938C1	CAVITY PLUG
RPM 23-WAY CONNECTOR	
3677559C1	23-WAY CONNECTOR
1698937C1	16, 18, 20-GAUGE TERMINAL
1688285C1	CAVITY PLUG

Parts Associated with Feature

How to Test This Feature:

1. To determine if the PTO is working, depress the PTO switch in the cab to the on position. Ensure that all interlock conditions are enabled (as programmed in the Diamond Logic® Builder software).
2. Verify that the pin labeled PTO_Output on the brown 8-way RPM output connector has the battery voltage level present.
3. Verify that the RPM input labeled PTO_Feedback_Switch (pin position specified by the Diamond Logic® Builder software) is receiving the correct voltage (12V or GND) as specified by the programmable
Parameter 2147 in the Diamond Logic® Builder software.
4. Make certain that the indicator light in the top section of the PTO switch illuminates by engaging the PTO.
5. Make certain that the PTO indicator light in the gauge cluster illuminates by engaging the PTO.
6. The audible alarm can be tested by violating the set programmable parameters and determining if the
alarm sounds. For example: If the park brake interlock is programmed ON, release the park brake and
engage the PTO. The audible alarm should sound with continuous beeps.

Note: This feature uses body controller-based software controls which can be diagnosed with The International® Diamond Logic® Builder software (see local dealer if not owned).

References:
Refer to the applicable International® Circuit Diagrams and Service Manuals.

33.10. 60ABL: BDY INTG, PTO ACCOMMODATION. Accommodation for Electric over Air, Clutched PTO Engagement and Disengagement, does not Include Air Solenoid, With Switch Mounted on Dash, Includes Audible Alarm, and Indicator Light in Gauge Cluster (requires one RPM input and one output).

Note: Not compatible with T14 Transmission

Feature Applicability to Vehicle Platforms:

- Heavy Vocational (HV)
- Medium Vocational (MV)
- Heavy Extreme (HX) 2021 and Newer

Extended Description: This feature provides a latched switch in the in-cab switch pack to drive an RPM output that provides power to engage and disengage the Electric over Air, Clutched PTO. An RPM input is used to drive an indicator light in the gauge cluster, allowing the operator to discern if the PTO is engaged. An audible alarm sounds when certain programmable parameters are violated. The RPM input also drives a PTO hour meter to allow the operator to measure stationary PTO hours for maintenance records and fuel tax purposes. To view the hour meter, press the gauge cluster selection button momentarily until the text portion of the display indicates “PTO Hour.”

This PTO feature is a rule-based option. The operation of the PTO is governed by rules of engagement, disengagement, re-engagement, and alarms. These rules are defined through programmable parameters. Through these programmable parameters, the vehicle owner can customize the functionality of the PTO. Factory default settings for these programmable parameters are listed in the tables below.

Please use the Diamond Logic® Builder software to determine pin locations for RPM inputs and outputs (refer to the CONNECTOR screen view) and to set programmable parameters (refer to the FEATURE screen view).

System Block Diagram:

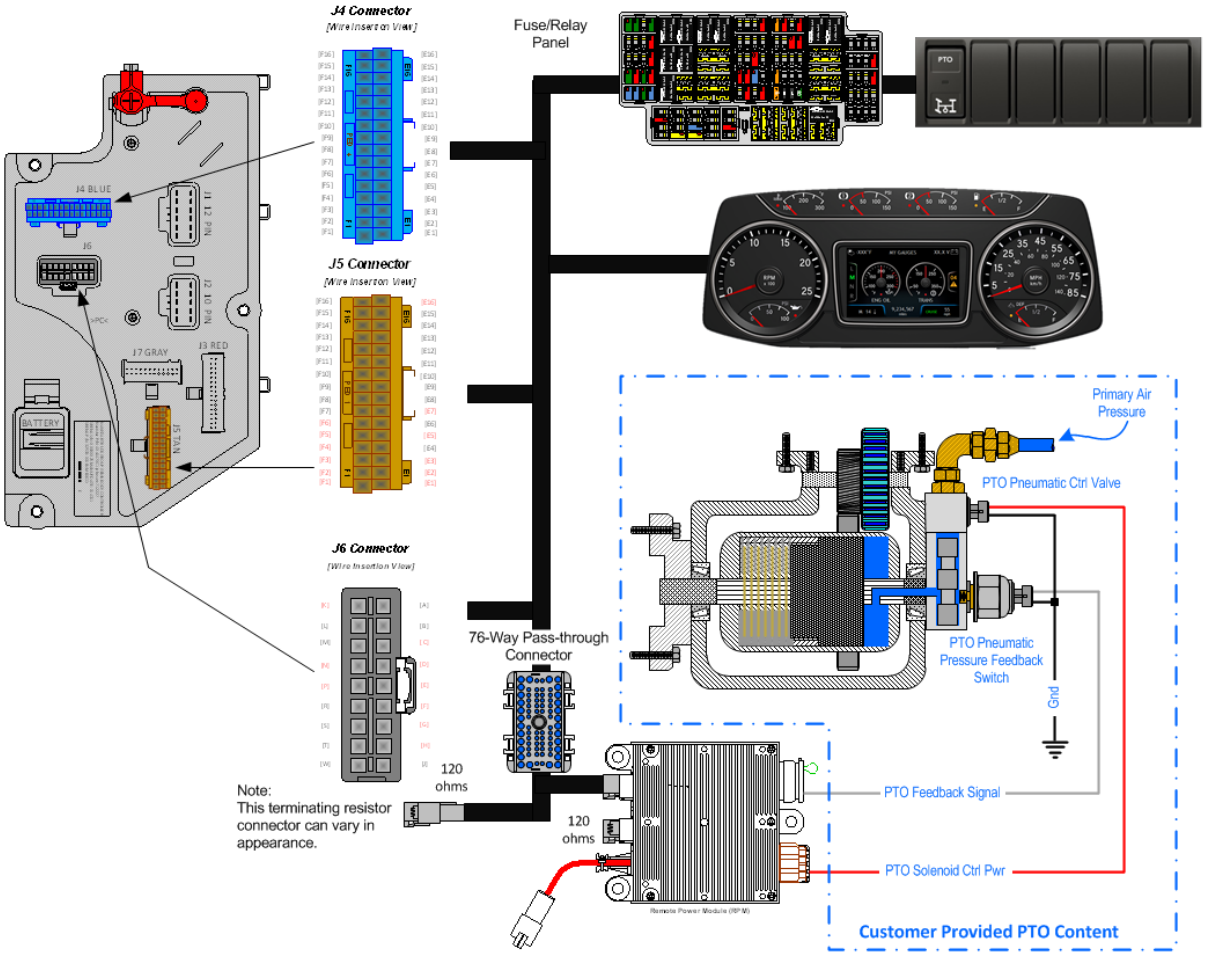

Note: It is important to ensure the Power Take Off (PTO) internal shift mechanism has adequate pneumatic potential communication for the full engagement of the PTO coupling/decoupling mechanism. Full engagement is typically a function of the available pneumatic potential sourced from the chassis' primary air supply system which [can] limit the full power transmission capabilities of the PTO coupling and decoupling mechanism/s.

Body Controller Software Feature Codes:

- 597200 - BCM PROG, **PTO CONTROL LOGIC for Dash Switch**
- 597264 - BCM PROG, **PTO SHIFT with Pneumatic Engagement Electric Over Air**
- 597282 - BCM PROG, **PTO HOURMETER HRS DISPLAYED IP**
- 597283 - BCM PROG, **PTO MONITOR INDICATOR & ALARM** (failure to add this feature will result in an OBD fault condition)

Note: Feature 16WLM is part of 60ABL

- **Note: if Eaton® Procision™ or Endurant™ Transmission is being used add:**
  - **597276 – BCM PROG, PTO ENABLER J1939 Engagement Consent for Eaton® Procision™ and Endurant™**

Body Controller Software Feature Code Parameters:

Parameter	ID	Description	Default	Units	Min	Max	Step
On – Indicates a 1 is set for the parameter							
Off – Indicates a 0 is set in for this parameter							
ENGAGEMENT PARAMETERS							
TEM_PTO_PK_Brake_Engmnt_Inhib	2087	If this Parameter is 1, the PTO will not be engaged if the Park Brake is not set.	OFF	N/A	N/A	N/A	N/A
TEM_PTO_Non_Neut_Engmnt_Inhib	2088	If this Parameter is 1, the PTO will not be engaged if the Transmission is not in Neutral or Park	OFF	N/A	N/A	N/A	N/A
TEM_PTO_Neut_Engmnt_Inhib	2089	If this Parameter is 1, the PTO will only be engaged if the Transmission is not in Neutral or Park	OFF	N/A	N/A	N/A	N/A
TEM_PTO_Veh_Spd_Engmnt_Inhib	2090	If this Parameter is 1, the PTO will not be engaged if the vehicle speed is over the value set in TEM_PTO_Veh_Spd_Engmnt_Limit	ON	N/A	N/A	N/A	N/A
TEM_PTO_Veh_Spd_Engmnt_Limit	2091	See TEM_PTO_Veh_Spd_Engmnt_Inhib	3.00	MPH	1	100	1
TEM_PTO_Eng_Spd_Engmnt_Inhib	2092	If this Parameter is 1, the PTO will not be engaged if the engine speed is over the value set in TEM_PTO_Eng_Spd_Engmnt_Limit	ON	N/A	N/A	N/A	N/A
TEM_PTO_Eng_Spd_Engmnt_Limit	2093	See TEM_PTO_Eng_Spd_Engmnt_Inhib	1000	RPM	100	5000	0.1
TEM_PTO_Cltch_Engmnt_Inhib	2094	If this Parameter is 1, the PTO will not be engaged if the clutch pedal is not depressed	OFF	N/A	N/A	N/A	N/A
TEM_PTO_Brake_Engmnt_Inhib	2095	If this Parameter is 1, the PTO will not be engaged if the brake pedal is not depressed	OFF	N/A	N/A	N/A	N/A
TEM_PTO_Eng_Run_Engmnt_Inhib	2096	If this Parameter is 1, the PTO will not be engaged if the engine is not running	OFF	N/A	N/A	N/A	N/A
TEM_PTO_Air_Pres_Engmnt_Inhib	2097	If this Parameter is 1, the PTO will not be engaged if the primary vehicle air pressure is below TEM_PTO_Air_Pres_Engmnt_Limit	OFF	N/A	N/A	N/A	N/A
TEM_PTO_Air_Pres_Engmnt_Limit	2098	See TEM_PTO_Air_Pres_Engmnt_Inhib	90	PSI	1	500	1
TEM_PTO_Mast_Swtch_Engmnt_Inhib	2099	If this Parameter is 1, the PTO will not be engaged if the vehicle master switch is not ON.	OFF	N/A	N/A	N/A	N/A
DISENGAGEMENT PARAMETERS							
TEM_PTO_Pk_Brake_Disengages	2108	if this Parameter is 1, the PTO will be disengaged if the Park Brake is released	OFF	N/A	N/A	N/A	N/A
TEM_PTO_Non_Neut_Disengages	2109	if this Parameter is 1, the PTO will be disengaged if the transmission is taken out of neutral	OFF	N/A	N/A	N/A	N/A

TEM_PTO_Veh_Spd_Disengages	2110	if this Parameter is 1, the PTO will be disengaged if the vehicle speed is over the value set in TEM_PTO_Veh_Spd_DisEng_Limit	OFF	N/A	N/A	N/A	N/A
TEM_PTO_Veh_Spd_DisEng_Limit	2111	see TEM_PTO_Veh_Spd_Disengages	3	MPH	3	100	1
TEM_PTO_Eng_Spd_Disengages	2112	if this Parameter is 1, the PTO will be disengaged if the vehicle speed is over the value set in TEM_PTO_Eng_Spd_DisEng_Limit	ON	N/A	N/A	N/A	N/A
TEM_PTO_Eng_Spd_DisEng_Limit	2113	see TEM_PTO_Eng_Spd_Disengages	1800	RPM	0	5000	1
TEM_PTO_Eng_Run_Disengages	2114	If this Parameter is 1, the PTO will be disengaged if the engine is turned off	OFF	N/A	N/A	N/A	N/A
TEM_PTO_Air_Pres_Disengages	2115	if this Parameter is 1, the PTO will be disengaged if the primary air pressure is below the value set in TEM_PTO_Air_Pres_DisEng_Limit	OFF	N/A	N/A	N/A	N/A
TEM_PTO_Air_Pres_DisEng_Limit	2116	see TEM_PTO_Air_Pres_Disengages	80	PSI	0	500	1
TEM_PTO_Ext_Input_Disengages	2117	if this Parameter is 1, the PTO will be disengaged if the external input designated for this purpose is active	OFF	N/A	N/A	N/A	N/A
TEM_PTO_Mast_Swtch_Disengages	2118	if this Parameter is 1, the PTO will be disengaged if the vehicle master switch is not ON	OFF	N/A	N/A	N/A	N/A
RE-ENGAGEMENT PARAMETERS							
TEM_PTO_Key_State_Allow_ReEng	2069	If this parameter is set, the PTO will be allowed to reengage when the key state is returned to run.	OFF	N/A	N/A	N/A	N/A
TEM_PTO_Veh_Spd_Allow_ReEng	2119	if this Parameter is 1, the PTO will be reengaged after a disengage due to vehicle overspeed when the vehicle speed is below TEM_PTO_Veh_Spd_Engmnt_Limit	OFF	N/A	N/A	N/A	N/A
TEM_PTO_Eng_Spd_Allow_ReEng	2120	if this Parameter is 1, the PTO will be reengaged after a disengage due to engine overspeed when the engine speed is below TEM_PTO_Eng_Spd_Engmnt_Limit	ON	N/A	N/A	N/A	N/A
TEM_PTO_Ext_Input_Allow_ReEng	2121	if this Parameter is 1, the PTO will be reengaged after a disengage due to the designated external input when the external input is no longer active	OFF	N/A	N/A	N/A	N/A
TEM_PTO_Eng_Run_Allow_ReEng	2122	if this Parameter is 1, the PTO will be reengaged after a disengage due to the engine stopping when the engine is restarted	OFF	N/A	N/A	N/A	N/A
TEM_PTO_Mast_Swtch_Allow_ReEng	2123	if this Parameter is 1, the PTO will be reengaged after a disengage due to the master switch being turned off when the master switch is turned on again	OFF	N/A	N/A	N/A	N/A
TEM_PTO_Air_Pres_Allow_ReEng	2124	if this Parameter is 1, the PTO will be reengaged after a disengage due to low vehicle air pressure when the	OFF	N/A	N/A	N/A	N/A

		primary air pressure is over TEM_PTO_Air_Pres_Engmnt_Limit					
TEM_PTO_Non_Neut_Allow_ReEng	2148	if this Parameter is 1, the PTO will be reengaged after a disengage due to transmission out of neutral when the transmission is placed back into neutral.	OFF	N/A	N/A	N/A	N/A
TEM_PTO_Pk_Brake_Allow_ReEng	2149	if this Parameter is 1, the PTO will be reengaged after a disengage due to park brake released when the park brake is reapplied.	OFF	N/A	N/A	N/A	N/A
ALARMS PARAMETERS							
TEM_PTO_Pk_Brake_Alarms	2131	if this Parameter is 1, an alarm will sound if the PTO is engaged, and the park brake is released	OFF	N/A	N/A	N/A	N/A
TEM_PTO_Non_Neut_Alarms	2132	if this Parameter is 1, an alarm will sound if the PTO is engaged, and transmission is taken out of neutral	OFF	N/A	N/A	N/A	N/A
TEM_PTO_Veh_Spd_Alarms	2133	if this Parameter is 1, an alarm will sound if the PTO is engaged, and the vehicle speed is over TEM_PTO_Veh_Spd_Alarm_Limit	ON	N/A	N/A	N/A	N/A
TEM_PTO_Veh_Spd_Alarm_Limit	2134	See TEM_PTO_Veh_Spd_Alarms	3	MPH	3	100	1
TEM_PTO_Eng_Spd_Alarms	2135	if this Parameter is 1, an alarm will sound if the PTO is engaged, and the engine speed is over TEM_PTO_Eng_Spd_Alarm_Limit	ON	N/A	N/A	N/A	N/A
TEM_PTO_Eng_Spd_Alarm_Limit	2136	See TEM_PTO_Eng_Spd_Alarms	1400	RPM	0	5000	0.1
TEM_PTO_Eng_Run_Alarms	2137	if this Parameter is 1, an alarm will sound if the PTO is engaged, and the engine is turned off	OFF	N/A	N/A	N/A	N/A
TEM_PTO_Air_Pres_Alarms	2138	if this Parameter is 1, an alarm will sound if the primary air pressure is below TEM_PTO_Air_Pres_Alarm_Limit	OFF	N/A	N/A	N/A	N/A
TEM_PTO_Air_Pres_Alarm_Limit	2139	See TEM_PTO_Air_Pres_Alarms	0	PSI	0	500	1
TEM_RPM_PTO_Engaged_Param	2147	Active State for the TEM PTO engagement feedback switch.	0	No Units	0	3	1
Unique for 597264 - BCM PROG, **PTO SHIFT w Pneumatic Engagement Electric Over Air**							
TEM_Hyd_PTO_Engagement_Out_Param	1993	This is the fuse level of the Hydraulic PTO FET	20	Amps	0	20	0.1

Parameter Definitions:

- **ENGAGEMENT PARAMETERS**

  These parameters set rules that must be met for the PTO to be engaged.

  In Example

  If TEM_PTO_Air_Pres_Engmnt_Inhib parameter is turned on, the PTO cannot be engaged if the primary vehicle air pressure is below the programmable parameter set by TEM_PTO_Air_Pres_Engmnt_Limit. **for Dash Switch**

- **TEM_PTO_PK_Brake_Engmnt_Inhib** – 2087 If this parameter is turned on, then the brake pedal must be depressed for the PTO to engage.
- **TEM_PTO_Non_Neut_Engmnt_Inhib** – 2088 If this parameter is turned on, then the transmission must be in Neutral or Park for the PTO to be engaged.
- **TEM_PTO_Neut_Engmnt_Inhib** – 2089 If this parameter is turned on, then the PTO can only be engaged if the transmission is NOT in Neutral or Park.
- **TEM_PTO_Veh_Spd_Engmnt_Inhib** – 2090 If this parameter is turned on, then the PTO cannot be engaged if the vehicle speed is over the value prescribed by TEM_PTO_Veh_Spd_Engmnt_Limit.
- **TEM_PTO_Veh_Spd_Engmnt_Limit** – 2091 This parameter sets the physical value for the Vehicle Speed Inhibit.
- **TEM_PTO_Eng_Spd_Engmnt_Inhib** –2092 If this is parameter is turned on, then the PTO cannot be engaged if the engine speed is over a certain threshold, which is defined as a programmable parameter in TEM_PTO_Eng_Spd_Engmnt_Limit.
- **TEM_PTO_Eng_Spd_Engmnt_Limit** – 2093 This parameter sets the physical value for the Engine Speed Inhibit.
- **TEM_PTO_Cltch_Engmnt_Inhib** – 2094 If this parameter is turned on, then the clutch pedal must be depressed for the PTO to engage.
- **TEM_PTO_Brake_Engmnt_Inhib** – 2095 If this parameter is turned on, then the brake pedal must be depressed for the PTO to engage.
- **TEM_PTO_Eng_Run_Engmnt_Inhib** – 2096 If this parameter is turned on, then the engine must be running for the PTO to be engaged.
- **TEM_PTO_Air_Pres_Engmnt_Inhib** – 2097 If this parameter is turned on, the PTO cannot be engaged if the primary vehicle air pressure is below the programmable parameter set by TEM_PTO_Air_Pres_Engmnt_Limit.
- **TEM_PTO_Air_Pres_Engmnt_Limit** – 2098 This parameter sets the physical value for the Air Pressure Inhibit.
- **TEM_PTO_Mast_Swtch_Engmnt_Inhib** – 2099 If this parameter is turned on, then the PTO will not be engaged if the vehicle master switch is not ON.
- **DISENGAGEMENT PARAMETERS**
  These parameters set the conditions under which the PTO will be disengaged.
- **TEM_PTO_Pk_Brake_Disengages** – 2108 If this parameter is turned on, then the PTO will be disengaged if the Park Brake is released.
- **TEM_PTO_Non_Neut_Disengages** – 2109 If this parameter is turned on, then the PTO will be disengaged if the transmission is taken out of neutral.
- **TEM_PTO_Veh_Spd_Disengages** – 2110 If this parameter is turned on, then the PTO will be disengaged if the vehicle speed is over the value specified by TEM_PTO_Veh_Spd_DisEng_Limit.
- **TEM_PTO_Veh_Spd_DisEng_Limit** – 2111 This parameter sets the physical value for the Vehicle Speed disengagement.

- **TEM_PTO_Eng_Spd_Disengages** – 2112 If this parameter is turned on, then the PTO will be disengaged if the engine speed rises above the value set by TEM_PTO_Eng_Spd_DisEng_Limit.
- **TEM_PTO_Eng_Spd_DisEng_Limit** – 2113 This parameter sets the physical value for the Engine Speed disengagement.
- **TEM_PTO_Eng_Run_Disengages** – 2114 If this parameter is turned on, then the PTO will be disengaged if the engine is turned off.
- **TEM_PTO_Air_Pres_Disengages** – 2115 If this parameter is turned on, then the PTO will be disengaged if the primary air pressure is below the value set in TEM_PTO_Air_Pres_DisEng_Limit.
- **TEM_PTO_Air_Pres_DisEng_Limit** – 2116 This parameter sets the physical value for the Air Pressure disengagement.
- **TEM_PTO_Ext_Input_Disengages** – 2117 If this parameter is turned on, then the PTO will be disengaged if the external input designated for this purpose is active.
- **TEM_PTO_Mast_Swtch_Disengages** – 2118 If this parameter is turned on, then the PTO will be disengaged if the vehicle master switch is not ON.
- **Re-ENGAGEMENT PARAMETERS**
  These parameters set the conditions under which the PTO will be re-engaged due to a parameter disengagement.
- **TEM_PTO_Key_State_Allow_ReEng** – 2069 If this parameter is turned on, then the PTO will be allowed to reengage when the key state is returned to run.
- **TEM_PTO_Veh_Spd_Allow_ReEng** – 2119 If this parameter is turned on, then the PTO will be reengaged (after disengagement due to the vehicle being over the vehicle speed value) when the vehicle speed falls below TEM_PTO_Veh_Spd_Engmnt_Limit.
- **TEM_PTO_Eng_Spd_Allow_ReEng** – 2120 If this parameter is turned on, then the PTO will be reengaged (after disengagement due to engine overspeed) when the engine speed falls below TEM_PTO_Eng_Spd_Engmnt_Limit.
- **TEM_PTO_Ext_Input_Allow_ReEng** – 2121 If this parameter is turned on, then the PTO will be reengaged (after a disengage due to the designated external input being in active state) when the external input is no longer in active state.
- **TEM_PTO_Eng_Run_Allow_ReEng** – 2122 If this parameter is turned on, then the PTO will be reengaged (after disengagement due to engine stopping) when the engine is restarted.
- **TEM_PTO_Mast_Swtch_Allow_ReEng** – 2123 If is turned on, then the PTO will be reengaged after a disengage due to the master switch being turned off when the master switch is turned on again.
- **TEM_PTO_Air_Pres_Allow_ReEng** – 2124 If this parameter is turned on, then the PTO will be reengaged (after disengagement due to low air pressure) when the primary air pressure rises about the value specified by TEM_PTO_Air_Pres_Engmnt_Limit.

- **TEM_PTO_Non_Neut_Allow_ReEng** – 2148 If this parameter is turned on, then the PTO will be reengaged (after disengagement due to transmission out of neutral) when the transmission is placed back into neutral.
- **TEM_PTO_Pk_Brake_Allow_ReEng** – 2149 If this parameter is turned on, then the PTO will be reengaged (after disengagement due to park brake released) when the park brake is reapplied.
- **ALARM PARAMETERS**
  These parameters utilize the gauge cluster to sound an alarm to the driver when certain programmable parameters are violated.
- **TEM_PTO_Pk_Brake_Alarms** – If this parameter is turned on, then an audible alarm will sound in the cab if the PTO is engaged, and the park brake is released.
- **TEM_PTO_Non_Neut_Alarms** – 2132 If this parameter is turned on, then an audible alarm will sound in the cab if the PTO is engaged, and the transmission is taken out of neutral.
- **TEM_PTO_Veh_Spd_Alarms** – 2133 If this is turned on, then an audible alarm will sound if the PTO is engaged, and the vehicle speed is over the value set by TEM_PTO_Veh_Spd_Alarm_Limit
- **TEM_PTO_Veh_Spd_Alarm_Limit** – 2134 This parameter sets the physical value for the Vehicle Speed Alarm.
- **TEM_PTO_Eng_Spd_Alarms** – 2135 If this is turned on, then an alarm will sound if the PTO is engaged, and the engine speed is over the value set by TEM_PTO_Eng_Spd_Alarm_Limit
- **TEM_PTO_Eng_Spd_Alarm_Limit** – 2136 This parameter sets the physical value for the Engine Speed Alarm.
- **TEM_PTO_Eng_Run_Alarms** – 2137 If this parameter is turned on, then an audible alarm will sound in the cab if the PTO is engaged, and the engine is turned off.
- **TEM_PTO_Air_Pres_Alarms** – 2138 If this parameter is turned on, then an audible alarm will sound in the cab if the primary air pressure drops below the value specified by TEM_PTO_Air_Pres_Alarm_Limit.
- **TEM_PTO_Air_Pres_Alarm_Limit** – 2139 This parameter sets the physical value for the Air Pressure Alarm.
- **TEM_RPM_PTO_Engaged_Param** – 2147 This parameter indicates the active state that the body controller (BCM) will read as active for the TEM PTO feedback switch (as it goes into the RPM input). This active state will be used to indicate when the PTO is engaged:
  - 0 = Input active when open circuit
  - 1 = Input active when grounded
  - 2 = not used
  - 3 = Input active when at 12V

- **Parameters Unique to 597264 - PTO SHIFT w Pneumatic Engagement Electric Over Air**

- **TEM_Hyd_PTO_Engagement_Out_Param** – 1993 This parameter sets the current at which the Body Controller will fuse the Remote Power Module output that drives the engagement of the PTO. This is used to define the maximum amount of current that can flow through the Remote Power Module output.

Note/s About Possible Software Feature Conflicts:
Only one PTO feature is allowed with 597200.
Also, 597264 conflicts with 597132, 597277, 597278, 597280, 597281, 597304, 597307
Additionally, 597283 conflicts with 597279

Parts Associated with This Feature:

PART NUMBER	DESCRIPTION
RPM OUTPUT TERMINAL KITS	
2585651C91	RPM TERMINAL KIT 12-GAUGE
2585423C91	RPM TERMINAL KIT 14-GAUGE
RPM BROWN 8–WAY CONNECTOR	
3548934C1	8–WAY CONNECTOR BODY
3534163C1	12-GAUGE TERMINAL
3535931C1	14-GAUGE TERMINAL
3535930C1	16 & 18-GAUGE TERMINAL
3548945C1	12 & 14-GAUGE CABLE SEAL
3535937C1	16 & 18-GAUGE CABLE SEAL
3548943C1	CONNECTOR LOCK
3573833C1	CAP LOCK
3535938C1	CAVITY PLUG
RPM 23-WAY CONNECTOR	
3677559C1	23-WAY CONNECTOR
1698937C1	16, 18, 20-GAUGE TERMINAL
1688285C1	CAVITY PLUG

How to Test This Feature:
1. To determine if the PTO is working, depress the PTO switch in the cab to the on position. Ensure that all interlock conditions are enabled (as programmed in the Diamond Logic® Builder software).
2. Verify that the pin labeled PTO_Output on the brown 8-way RPM output connector has the battery voltage level present.
3. Verify that the RPM input labeled PTO_Feedback_Switch (pin position specified by the Diamond Logic® Builder software) is receiving the correct voltage (12V or GND) as specified by the programmable

Parameter 2147 in the Diamond Logic® Builder software.
4. Make certain that the indicator light in the top section of the PTO switch illuminates by engaging the PTO.
5. Make certain that the PTO indicator light in the gauge cluster illuminates by engaging the PTO.
6. The audible alarm can be tested by violating the set programmable parameters and determining if the
alarm sounds. For example: If the park brake interlock is programmed ON, release the park brake and
engage the PTO. The audible alarm should sound with continuous beeps.

Note: This feature uses body controller-based software controls which can be diagnosed with The International® Diamond Logic® Builder software (see local dealer if not owned).

References:
Refer to the applicable International® Circuit Diagrams and Service Manuals.

33.11. 60AKG: BDY INTG, PTO ACCOMMODATION for (3) Latched Rocker Switches, (1) PTO Switch, (2) Generic Switches to Control (3) 30-amp relays, with Programmable Interlocks, for Body Builder Hook up in the Engine Compartment Left Side, Recommended for Automatic Transmissions.

Note: Not compatible with T14 Transmission

Feature Applicability to Vehicle Platforms:

- Heavy Vocational (HV)
- Medium Vocational (MV)
- Heavy Extreme (HX) 2021 and Newer

Extended Description: This feature provides two 2-position Latched Rocker switches that control two auxiliary loads requiring a total of two Body Controller relay driver outputs driving fused 30-amp relays. Outputs default to disengage when vehicle speed reaches 30-MPH. The outputs will only be available in IGN or accessory key-state. This feature is used for applications such as the rear work or scene light. If the operator forgets to turn the light off before driving away, the light will shut off when the driver hits 30-MPH.

The switches can be interlocked with certain programmable conditions. These conditions can be set as programmable parameters using the Diamond Logic® Builder software. These parameters are listed and explained below. Each of the two outputs has its' own set of parameters. Blunt cut wires are provided in the engine compartment

for the body builder to connect to. Please refer to the circuit diagram manual for additional information on wiring.

This feature also provides the customer with the ability to control a customer-supplied PTO with an in-dash switch. The PTO switch also utilizes a Body Controller relay driver output to control a fused 30-amp relay located in the cab power distribution panel. A blunt cut wire is provided in the engine compartment to provide power to the PTO solenoid. Programmable parameters allow customers to customize the functionality of their PTO. Please use the Diamond Logic® Builder software to determine pin and switch locations for Body Controller outputs and to set programmable parameters (refer to Feature, Connector and Center Panel section).

System Block Diagram:

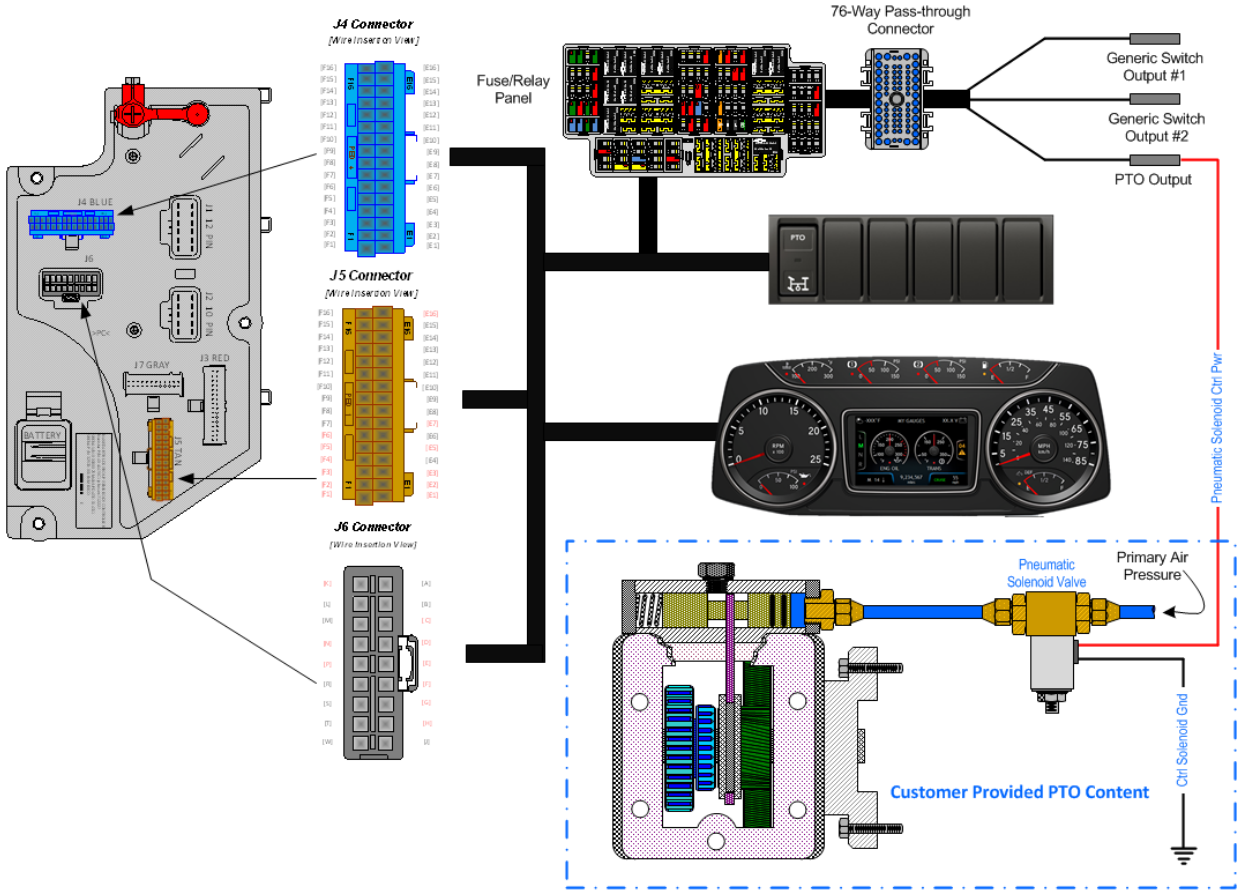

Note: It is important to ensure the Power Take Off (PTO) internal shift mechanism has adequate pneumatic potential communication for the full engagement of the PTO coupling/decoupling mechanism. Full engagement is typically a function of the available pneumatic potential sourced from the chassis primary air pressure supply system which [can] limit the full power transmission capabilities of the PTO coupling and decoupling mechanism/s.

Circuit Location:

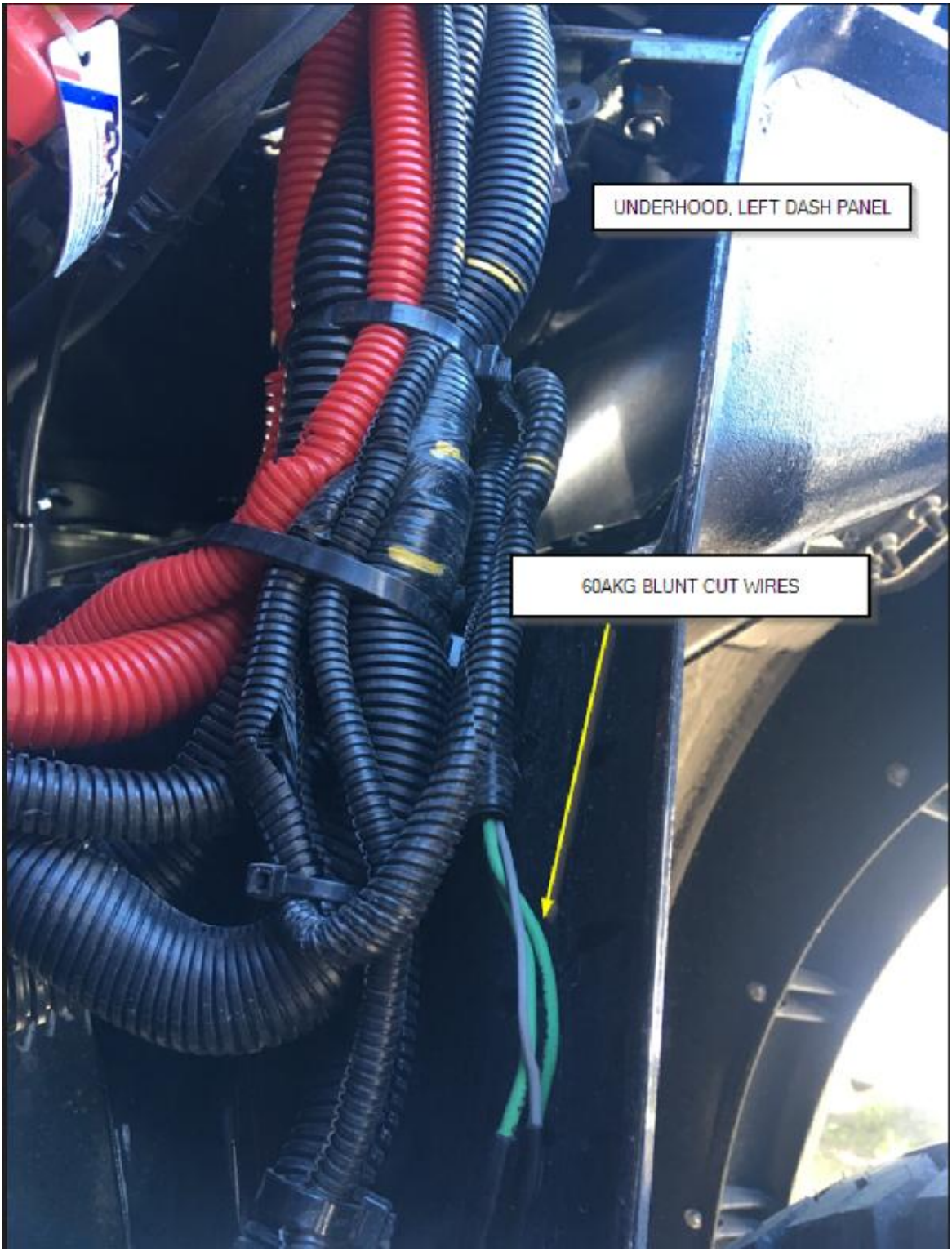

Body Controller Software Feature Codes:

- 597200 - BCM PROG, **PTO CONTROL LOGIC for Dash Switch**
- 597277 - BCM PROG, **PTO SHIFT for (1) Dash Mounted Switch with 30-amp Relay, for Customer Provided PTO, with Programmable Parameters**
- 597338 - BCM PROG, **AUXILIARY LOAD #7 for (2) Rocker Switches and (2) Relays**
- **Note: if Eaton® Procision™ or Endurant™ Transmission is being used add:**
  - **597276 – BCM PROG, PTO ENABLER J1939 Engagement Consent for Eaton® Procision™ and Endurant™**

Body Controller Software Feature Code Parameters:

Parameter	ID	Description	Default	Units	Min	Max	Step
Parameters Specific for PTO Operation							
On – Indicates a 1 is set for the parameter							
Off – Indicates a 0 is set in for this parameter							
ENGAGEMENT PARAMETERS							
TEM_PTO_PK_Brake_Engmnt_Inhib	2087	If this Parameter is 1, the PTO will not be engaged if the Park Brake is not set.	OFF	N/A	N/A	N/A	N/A
TEM_PTO_Non_Neut_Engmnt_Inhib	2088	If this Parameter is 1, the PTO will not be engaged if the Transmission is not in Neutral or Park	OFF	N/A	N/A	N/A	N/A
TEM_PTO_Neut_Engmnt_Inhib	2089	If this Parameter is 1, the PTO will only be engaged if the Transmission is not in Neutral or Park	OFF	N/A	N/A	N/A	N/A
TEM_PTO_Veh_Spd_Engmnt_Inhib	2090	If this Parameter is 1, the PTO will not be engaged if the vehicle speed is over the value set in TEM_PTO_Veh_Spd_Engmnt_Limit	ON	N/A	N/A	N/A	N/A
TEM_PTO_Veh_Spd_Engmnt_Limit	2091	See TEM_PTO_Veh_Spd_Engmnt_Inhib	3.00	MPH	1	100	1
TEM_PTO_Eng_Spd_Engmnt_Inhib	2092	If this Parameter is 1, the PTO will not be engaged if the engine speed is over the value set in TEM_PTO_Eng_Spd_Engmnt_Limit	ON	N/A	N/A	N/A	N/A
TEM_PTO_Eng_Spd_Engmnt_Limit	2093	See TEM_PTO_Eng_Spd_Engmnt_Inhib	1000	RPM	100	5000	0.1
TEM_PTO_Cltch_Engmnt_Inhib	2094	If this Parameter is 1, the PTO will not be engaged if the clutch pedal is not depressed	OFF	N/A	N/A	N/A	N/A
TEM_PTO_Brake_Engmnt_Inhib	2095	If this Parameter is 1, the PTO will not be engaged if the brake pedal is not depressed	OFF	N/A	N/A	N/A	N/A
TEM_PTO_Eng_Run_Engmnt_Inhib	2096	If this Parameter is 1, the PTO will not be engaged if the engine is not running	OFF	N/A	N/A	N/A	N/A
TEM_PTO_Air_Pres_Engmnt_Inhib	2097	If this Parameter is 1, the PTO will not be engaged if the primary vehicle air pressure is below TEM_PTO_Air_Pres_Engmnt_Limit	OFF	N/A	N/A	N/A	N/A

TEM_PTO_Air_Pres_Engmnt_Limit	2098	See TEM_PTO_Air_Pres_Engmnt_Inhib	90	PSI	1	500	1
TEM_PTO_Mast_Switch_Engmnt_Inhib	2099	If this Parameter is 1, the PTO will not be engaged if the vehicle master switch is not ON.	OFF	N/A	N/A	N/A	N/A
DISENGAGEMENT PARAMETERS							
TEM_PTO_Pk_Brake_Disengages	2108	if this Parameter is 1, the PTO will be disengaged if the Park Brake is released	OFF	N/A	N/A	N/A	N/A
TEM_PTO_Non_Neut_Disengages	2109	if this Parameter is 1, the PTO will be disengaged if the transmission is taken out of neutral	OFF	N/A	N/A	N/A	N/A
TEM_PTO_Veh_Spd_Disengages	2110	if this Parameter is 1, the PTO will be disengaged if the vehicle speed is over the value set in TEM_PTO_Veh_Spd_DisEng_Limit	OFF	N/A	N/A	N/A	N/A
TEM_PTO_Veh_Spd_DisEng_Limit	2111	see TEM_PTO_Veh_Spd_Disengages	3	MPH	3	100	1
TEM_PTO_Eng_Spd_Disengages	2112	if this Parameter is 1, the PTO will be disengaged if the vehicle speed is over the value set in TEM_PTO_Eng_Spd_DisEng_Limit	ON	N/A	N/A	N/A	N/A
TEM_PTO_Eng_Spd_DisEng_Limit	2113	see TEM_PTO_Eng_Spd_Disengages	1800	RPM	0	5000	1
TEM_PTO_Eng_Run_Disengages	2114	If this Parameter is 1, the PTO will be disengaged if the engine is turned off	OFF	N/A	N/A	N/A	N/A
TEM_PTO_Air_Pres_Disengages	2115	if this Parameter is 1, the PTO will be disengaged if the primary air pressure is below the value set in TEM_PTO_Air_Pres_DisEng_Limit	OFF	N/A	N/A	N/A	N/A
TEM_PTO_Air_Pres_DisEng_Limit	2116	see TEM_PTO_Air_Pres_Disengages	80	PSI	0	500	1
TEM_PTO_Ext_Input_Disengages	2117	if this Parameter is 1, the PTO will be disengaged if the external input designated for this purpose is active	OFF	N/A	N/A	N/A	N/A
TEM_PTO_Mast_Switch_Disengages	2118	if this Parameter is 1, the PTO will be disengaged if the vehicle master switch is not ON	OFF	N/A	N/A	N/A	N/A
RE-ENGAGEMENT PARAMETERS							
TEM_PTO_Key_State_Allow_ReEng	2069	If this parameter is set, the PTO will be allowed to reengage when the key state is returned to run.	OFF	N/A	N/A	N/A	N/A
TEM_PTO_Veh_Spd_Allow_ReEng	2119	if this Parameter is 1, the PTO will be reengaged after a disengage due to vehicle overspeed when the vehicle speed is below TEM_PTO_Veh_Spd_Engmnt_Limit	OFF	N/A	N/A	N/A	N/A
TEM_PTO_Eng_Spd_Allow_ReEng	2120	if this Parameter is 1, the PTO will be reengaged after a disengage due to engine overspeed when the engine speed is below TEM_PTO_Eng_Spd_Engmnt_Limit	ON	N/A	N/A	N/A	N/A
TEM_PTO_Ext_Input_Allow_ReEng	2121	if this Parameter is 1, the PTO will be reengaged after a disengage due to the designated external input when the external input is no longer active	OFF	N/A	N/A	N/A	N/A

TEM_PTO_Eng_Run_Allow_ReEng	2122	if this Parameter is 1, the PTO will be reengaged after a disengage due to the engine stopping when the engine is restarted	OFF	N/A	N/A	N/A	N/A
TEM_PTO_Mast_Swtch_Allow_ReEng	2123	if this Parameter is 1, the PTO will be reengaged after a disengage due to the master switch being turned off when the master switch is turned on again	OFF	N/A	N/A	N/A	N/A
TEM_PTO_Air_Pres_Allow_ReEng	2124	if this Parameter is 1, the PTO will be reengaged after a disengage due to low vehicle air pressure when the primary air pressure is over TEM_PTO_Air_Pres_Engmnt_Limit	OFF	N/A	N/A	N/A	N/A
TEM_PTO_Non_Neut_Allow_ReEng	2148	if this Parameter is 1, the PTO will be reengaged after a disengage due to transmission out of neutral when the transmission is placed back into neutral.	OFF	N/A	N/A	N/A	N/A
TEM_PTO_Pk_Brake_Allow_ReEng	2149	if this Parameter is 1, the PTO will be reengaged after a disengage due to park brake released when the park brake is reapplied.	OFF	N/A	N/A	N/A	N/A
ALARMS PARAMETERS							
TEM_PTO_Pk_Brake_Alarms	2131	if this Parameter is 1, an alarm will sound if the PTO is engaged, and the park brake is released	OFF	N/A	N/A	N/A	N/A
TEM_PTO_Non_Neut_Alarms	2132	if this Parameter is 1, an alarm will sound if the PTO is engaged, and transmission is taken out of neutral	OFF	N/A	N/A	N/A	N/A
TEM_PTO_Eng_Run_Alarms	2137	if this Parameter is 1, an alarm will sound if the PTO is engaged, and the engine is turned off	OFF	N/A	N/A	N/A	N/A
597338 - BCM PROG, **AUXILIARY LOAD #7 for (2) Rocker Switches and (2) Relays**							
TEM_Aux1_Interlock_Latches_Off	2006	If this is set, when the output is turned off due to an interlock, it will remain off until the switch is recycled.	OFF	On/Off	n/a	n/a	n/a
TEM_Aux1_Speed_Interlock_Param	2007	The speed parameter for the TEM Aux #1 with Interlocks feature.	30	Mph	0	100	1
TEM_Aux1_Gear_Interlock_Param	2008	The transmission gear parameter for the TEM Aux #1 with Interlocks feature (124 is park, 125 is neutral, 126 is first, etc., 251 is park). The default value is 125 (neutral).	125	Number	0	250	1
TEM_Aux1_Misc_Interlock_Param	2033	Miscellaneous or control parameter used for setting the interlock for the auxiliary 1 with interlocks.	10	List	n/a	n/a	n/a
TEM_Aux2_Interlock_Latches_Off	2010	If this is set, when the output is turned off due to an interlock, it will remain off until the switch is recycled.	OFF	On/Off	n/a	n/a	n/a
TEM_Aux2_Speed_Interlock_Param	2011	The speed parameter for the TEM Aux #2 with Interlocks feature.	30	Mph	0	100	1
TEM_Aux2_Gear_Interlock_Param	2012	The transmission gear parameter for the TEM Aux #2 with Interlocks feature (124 is park, 125 is neutral,	125	Number	0	250	1

		126 is first, etc., 251 is park). The default value is 125 (neutral).					
TEM_Aux2_Misc_Interlock_Param	2034	Miscellaneous or control parameter used for setting the interlock for the auxiliary 2 with interlocks.	10	List	n/a	n/a	n/a

Parameter Definitions:

- **ENGAGEMENT PARAMETERS**

  These parameters set rules that must be met for the PTO to be engaged.

  In Example

  If TEM_PTO_Air_Pres_Engmnt_Inhib parameter is turned on, the PTO cannot be engaged if the primary vehicle air pressure is below the programmable parameter set by TEM_PTO_Air_Pres_Engmnt_Limit. **for Dash Switch**

- **TEM_PTO_PK_Brake_Engmnt_Inhib** – 2087 If this parameter is turned on, then the brake pedal must be depressed for the PTO to engage.
- **TEM_PTO_Non_Neut_Engmnt_Inhib** – 2088 If this parameter is turned on, then the transmission must be in Neutral or Park for the PTO to be engaged.
- **TEM_PTO_Neut_Engmnt_Inhib** – 2089 If this parameter is turned on, then the PTO can only be engaged if the transmission is NOT in Neutral or Park.
- **TEM_PTO_Veh_Spd_Engmnt_Inhib** – 2090 If this parameter is turned on, then the PTO cannot be engaged if the vehicle speed is over the value prescribed by TEM_PTO_Veh_Spd_Engmnt_Limit.
- **TEM_PTO_Veh_Spd_Engmnt_Limit** – 2091 This parameter sets the physical value for the Vehicle Speed Inhibit.
- **TEM_PTO_Eng_Spd_Engmnt_Inhib** –2092 If this is parameter is turned on, then the PTO cannot be engaged if the engine speed is over a certain threshold, which is defined as a programmable parameter in TEM_PTO_Eng_Spd_Engmnt_Limit.
- **TEM_PTO_Eng_Spd_Engmnt_Limit** – 2093 This parameter sets the physical value for the Engine Speed Inhibit.
- **TEM_PTO_Cltch_Engmnt_Inhib** – 2094 If this parameter is turned on, then the clutch pedal must be depressed for the PTO to engage.
- **TEM_PTO_Brake_Engmnt_Inhib** – 2095 If this parameter is turned on, then the brake pedal must be depressed for the PTO to engage.
- **TEM_PTO_Eng_Run_Engmnt_Inhib** – 2096 If this parameter is turned on, then the engine must be running for the PTO to be engaged.
- **TEM_PTO_Air_Pres_Engmnt_Inhib** – 2097 If this parameter is turned on, the PTO cannot be engaged if the primary vehicle air pressure is below the programmable parameter set by TEM_PTO_Air_Pres_Engmnt_Limit.
- **TEM_PTO_Air_Pres_Engmnt_Limit** – 2098 This parameter sets the physical value for the Air Pressure Inhibit.
- **TEM_PTO_Mast_Swtch_Engmnt_Inhib** – 2099 If this parameter is turned on, then the PTO will not be engaged if the vehicle master switch is not ON.

- **DISENGAGEMENT PARAMETERS**
  These parameters set the conditions under which the PTO will be disengaged.
- **TEM_PTO_Pk_Brake_Disengages** – 2108 If this parameter is turned on, then the PTO will be disengaged if the Park Brake is released.
- **TEM_PTO_Non_Neut_Disengages** – 2109 If this parameter is turned on, then the PTO will be disengaged if the transmission is taken out of neutral.
- **TEM_PTO_Veh_Spd_Disengages** – 2110 If this parameter is turned on, then the PTO will be disengaged if the vehicle speed is over the valued specified by TEM_PTO_Veh_Spd_DisEng_Limit.
- **TEM_PTO_Veh_Spd_DisEng_Limit** – 2111 This parameter sets the physical value for the Vehicle Speed disengagement.
- **TEM_PTO_Eng_Spd_Disengages** – 2112 If this parameter is turned on, then the PTO will be disengaged if the engine speed rises above the value set by TEM_PTO_Eng_Spd_DisEng_Limit.
- **TEM_PTO_Eng_Spd_DisEng_Limit** – 2113 This parameter sets the physical value for the Engine Speed disengagement.
- **TEM_PTO_Eng_Run_Disengages** – 2114 If this parameter is turned on, then the PTO will be disengaged if the engine is turned off.
- **TEM_PTO_Air_Pres_Disengages** – 2115 If this parameter is turned on, then the PTO will be disengaged if the primary air pressure is below the value set in TEM_PTO_Air_Pres_DisEng_Limit.
- **TEM_PTO_Air_Pres_DisEng_Limit** – 2116 This parameter sets the physical value for the Air Pressure disengagement.
- **TEM_PTO_Ext_Input_Disengages** – 2117 If this parameter is turned on, then the PTO will be disengaged if the external input designated for this purpose is active.
- **TEM_PTO_Mast_Swtch_Disengages** – 2118 If this parameter is turned on, then the PTO will be disengaged if the vehicle master switch is not ON.
- **Re-ENGAGEMENT PARAMETERS**
  These parameters set the conditions under which the PTO will be re-engaged due to a parameter disengagement.
- **TEM_PTO_Key_State_Allow_ReEng** – 2069 If this parameter is turned on, then the PTO will be allowed to reengage when the key state is returned to run.
- **TEM_PTO_Veh_Spd_Allow_ReEng** – 2119 If this parameter is turned on, then the PTO will be reengaged (after disengagement due to the vehicle being over the vehicle speed value) when the vehicle speed falls below TEM_PTO_Veh_Spd_Engmnt_Limit.
- **TEM_PTO_Eng_Spd_Allow_ReEng** – 2120 If this parameter is turned on, then the PTO will be reengaged (after disengagement due to engine overspeed) when the engine speed falls below TEM_PTO_Eng_Spd_Engmnt_Limit.

- **TEM_PTO_Ext_Input_Allow_ReEng** – 2121 If this parameter is turned on, then the PTO will be reengaged (after a disengage due to the designated external input being in active state) when the external input is no longer in active state.
- **TEM_PTO_Eng_Run_Allow_ReEng** – 2122 If this parameter is turned on, then the PTO will be reengaged (after disengagement due to engine stopping) when the engine is restarted.
- **TEM_PTO_Mast_Swtch_Allow_ReEng** – 2123 If is turned on, then the PTO will be reengaged after a disengage due to the master switch being turned off when the master switch is turned on again.
- **TEM_PTO_Air_Pres_Allow_ReEng** – 2124 If this parameter is turned on, then the PTO will be reengaged (after disengagement due to low air pressure) when the primary air pressure rises about the value specified by TEM_PTO_Air_Pres_Engmnt_Limit.
- **TEM_PTO_Non_Neut_Allow_ReEng** – 2148 If this parameter is turned on, then the PTO will be reengaged (after disengagement due to transmission out of neutral) when the transmission is placed back into neutral.
- **TEM_PTO_Pk_Brake_Allow_ReEng** – 2149 If this parameter is turned on, then the PTO will be reengaged (after disengagement due to park brake released) when the park brake is reapplied.
- **ALARM PARAMETERS**
  These parameters utilize the gauge cluster to sound an alarm to the driver when certain programmable parameters are violated.
- **TEM_PTO_Pk_Brake_Alarms** – 2131 If this parameter is turned on, then an audible alarm will sound in the cab if the PTO is engaged, and the park brake is released.
- **TEM_PTO_Non_Neut_Alarms** – 2132 If this parameter is turned on, then an audible alarm will sound in the cab if the PTO is engaged, and the transmission is taken out of neutral.
- **TEM_PTO_Eng_Run_Alarms** – 2137 If this parameter is turned on, then an audible alarm will sound in the cab if the PTO is engaged, and the engine is turned off.
- **PARAMETERS SPECIFIC FOR AUXILLARY SWITCHES**
- **TEM_Aux1_Interlock_Latches_Off** – 2006 Normally, if the output is deactivated because the interlocking condition is not met, the output will re-activate as soon as the interlocking condition is re-established if the switch is still on. If this behavior is not desirable, the parameter TEM_Aux1_Interlock_Latches_Off parameter can be set. When it is set and the output is deactivated because the interlocking condition is not met, the output will not reactivate when the interlocking condition is re-established even if the switch is.
- **TEM_Aux1_Speed_Interlock_Param** – 2007 If TEM_Aux1_Misc_Interlock_Param is set to 9 or 10, the speed-interlock

parameter (TEM_Aux1_Speed_Interlock_Param) must also be set. This parameter must be set to the actual speed to use in the condition selected by TEM_Aux1_Misc_Interlock_Param (default unit for this parameter is MPH). The speed parameter is only used if TEM_Aux1_Misc_Interlock_Param is set to 9 or 10.

Example: If you want the output to only come on when the vehicle is traveling over 15 MPH, you would set TEM_Aux1_Misc_Interlock_Param to 9 and set TEM_Aux1_Speed_Interlock_Param to 15 MPH.

- **TEM_Aux1_Gear_Interlock_Param** – 2008 If TEM_Aux1_Misc_Interlock_Param is set to 13 or 14 and the vehicle has an automatic transmission, the gear-interlock parameter (TEM_Aux1_Gear_Interlock_Param) must also be set. This parameter must be set to the transmission gear to use in the condition selected by TEM_Aux1_Misc_Interlock_Param. The transmission gear is set as follows:

Setting	Transmission Gear
125	Transmission in Neutral
126	Transmission is in the 1st forward gear
127	Transmission is in the 2nd forward gear
128	Transmission is in the 3rd forward gear
125 + x	Transmission is in the xth forward gear
124	Transmission is in the 1st reverse gear
123	Transmission is in the 2nd reverse gear
125 – y	Transmission is in the yth reverse gear

The transmission gear parameter is only used if TEM_Aux1_Misc_Interlock_Param is set to 13 or 14.

Example: For the output to only come on when the vehicle transmission is in a reverse gear, set TEM_Aux1_Misc_Interlock_Param to 10 and TEM_Aux1_Gear_Interlock_Param to 125.

- **TEM_Aux1_Misc_Interlock_Param** – 2033 This parameter (TEM_Aux1_Misc_Interlock_Param) is the master parameter for this feature. The setting for this parameter selects the interlocking condition for the output. The following table indicates which interlocking condition corresponds to which setting for the parameter. To select the interlocking condition simply set the value of this parameter to the corresponding setting on the table.

Setting	Interlocking Condition
0	Apply no interlocks to this output
1	Activate this output when the park brake is set AND the switch is on
2	Activate this output when the park brake is not set AND the switch is on
3	Activate this output when a door is open AND the switch is on
4	Activate this output when all doors are closed AND the switch is on
5	Activate this output when the PTO is engaged AND the switch is on (Requires a PTO feature)
6	Activate this output when the PTO is not engaged AND the switch is on (Requires a PTO feature)
7	Activate this output when the engine is running AND the switch is on
8	Activate this output when the engine is not running AND the switch is on
9	Activate this output when the vehicle speed exceeds the value set in TEM_Aux_1_Speed_Interlock_Param AND the switch is on

10	Activate this output when the vehicle speed is less than the value set in TEM_Aux_1_Speed_Interlock_Param AND the switch is on
11	Activate this output when the vehicle is stopped AND the switch is on
12	Activate this output when the vehicle is moving AND the switch is on
13	Activate this output when the transmission gear is higher than TEM_Aux1_Gear_Interlock_Param AND the switch is on (Requires Automatic Transmission)
14	Activate this output when the transmission gear is lower than TEM_Aux1_Gear_Interlock_Param AND the switch is on (Requires Automatic Transmission)
15	Activate this output when the transmission is in neutral AND the switch is on (Requires Automatic Transmission)
16	Activate this output when the transmission is not in neutral AND the switch is on (Requires Automatic Transmission)

- **TEM_Aux2_Interlock_Latches_Off** – 2010 Normally, if the output is deactivated because the interlocking condition is not met, the output will re-activate as soon as the interlocking condition is re-established if the switch is still on. If this behavior is not desirable, the parameter TEM_Aux2_Interlock_Latches_Off parameter can be set. When it is set and the output is deactivated because the interlocking condition is not met, the output will not reactivate when the interlocking condition is re-established even if the switch is
- **TEM_Aux2_Speed_Interlock_Param** – 2011 If TEM_Aux2_Misc_Interlock_Param is set to 9 or 10, the speed-interlock parameter (TEM_Aux2_Speed_Interlock_Param) must also be set. This parameter must be set to the actual speed to use in the condition selected by TEM_Aux2_Misc_Interlock_Param (default unit for this parameter is MPH). The speed parameter is only used if TEM_Aux2_Misc_Interlock_Param is set to 9 or 10.

  Example: If you want the output to only come on when the vehicle is traveling over 15 MPH, you would set TEM_Aux2_Misc_Interlock_Param to 9 and set TEM_Aux2_Speed_Interlock_Param to 15 MPH.
- **TEM_Aux2_Gear_Interlock_Param** – 2012 If TEM_Aux2_Misc_Interlock_Param is set to 13 or 14 and the vehicle has an automatic transmission, the gear-interlock parameter (TEM_Aux2_Gear_Interlock_Param) must also be set. This parameter must be set to the transmission gear to use in the condition selected by TEM_Aux2_Misc_Interlock_Param. The transmission gear is set as follows:

.

Setting	Transmission Gear
125	Transmission in Neutral
126	Transmission is in the 1st forward gear
127	Transmission is in the 2nd forward gear
128	Transmission is in the 3rd forward gear
125 + x	Transmission is in the xth forward gear
124	Transmission is in the 1st reverse gear
123	Transmission is in the 2nd reverse gear
125 – y	Transmission is in the yth reverse gear

The transmission gear parameter is only used if TEM_Aux2_Misc_Interlock_Param is set to 13 or 14.

Example: For the output to only come on when the vehicle transmission is in a reverse gear, set TEM_Aux2_Misc_Interlock_Param to 10 and TEM_Aux2_Gear_Interlock_Param to 125.

- **TEM_Aux2_Misc_Interlock_Param** – 2034 This parameter (TEM_Aux2_Misc_Interlock_Param) is the master parameter for this feature. The setting for this parameter selects the interlocking condition for the output. The following table indicates which interlocking condition corresponds to which setting for the parameter. To select the interlocking condition simply set the value of this parameter to the corresponding setting on the table.

.

Setting	Interlocking Condition
0	Apply no interlocks to this output
1	Activate this output when the park brake is set AND the switch is on
2	Activate this output when the park brake is not set AND the switch is on
3	Activate this output when a door is open AND the switch is on
4	Activate this output when all doors are closed AND the switch is on
5	Activate this output when the PTO is engaged AND the switch is on (Requires a PTO feature)
6	Activate this output when the PTO is not engaged AND the switch is on (Requires a PTO feature)
7	Activate this output when the engine is running AND the switch is on
8	Activate this output when the engine is not running AND the switch is on
9	Activate this output when the vehicle speed exceeds the value set in TEM_Aux_1_Speed_Interlock_Param AND the switch is on
10	Activate this output when the vehicle speed is less than the value set in TEM_Aux_1_Speed_Interlock_Param AND the switch is on
11	Activate this output when the vehicle is stopped AND the switch is on
12	Activate this output when the vehicle is moving AND the switch is on
13	Activate this output when the transmission gear is higher than TEM_Aux1_Gear_Interlock_Param AND the switch is on (Requires Automatic Transmission)
14	Activate this output when the transmission gear is lower than TEM_Aux1_Gear_Interlock_Param AND the switch is on (Requires Automatic Transmission)
15	Activate this output when the transmission is in neutral AND the switch is on (Requires Automatic Transmission)
16	Activate this output when the transmission is not in neutral AND the switch is on (Requires Automatic Transmission)

Note/s About Possible Software Feature Conflicts:

Only one PTO feature is allowed with 597200.
597277 conflicts with 597132, 597264, 597278, 597280, 597281, 597304, 597307.
597338 conflicts with 597203 and 597204

Parts Associated with This Feature:

PART NUMBER	DESCRIPTION
3600329C1	4-PIN MICRO RELAY
4102431C1	SWITCH ELECTRONIC, BLANK WINDOW ROCKER - 2 POS - BISTABLE
3522073C1	BODY CONTROLLER 1601 TERMINAL

Parts Associated with Feature

How to Test This Feature:
1. Depress switch.
2. Verify that the output labeled Interlocked_switch_relay1_output is obtaining the desired voltage (as
programmed by the Diamond Logic® Builder software).
3. Verify the functionality of the 30-MPH interlock by violating the parameter and determine that the output
shuts off.
4. Test all other interlocks by violating the programmable parameters to see if the output shuts off.
5. Depress the second switch.
6. Verify that the RPM output labeled Interlocked_switch_relay2_output is obtaining the desired voltage (as programmed by the Diamond Logic® Builder software).
7. Verify the functionality of the 30-MPH interlock by violating the parameter and determine that the output shuts off.
8. Test all other interlocks by violating the programmable parameters to see if the output shuts off
9. Depress the In-cab PTO switch to the ON position.
10. Verify that all enabled interlock conditions are met.

Note: This feature uses body controller-based software controls which can be diagnosed with The International® Diamond Logic® Builder software (see local dealer if not owned).

References:
Refer to the applicable International® Circuit Diagrams and Service Manuals.

34. International® T14 Transmission Features

34.1. PTO With International® T14 Transmission with Transmission Mounted PTOs.

13HAL: PTO, TRANSMISSION Single Drive, Air Shift
13HAM: PTO, TRANSMISSION Dual Drive, Air Shift
13HAR PTO DRIVE SPEED Lo
13HAS PTO DRIVE SPEED Hi
13HAT PTO DRIVE SPEED Lo and Hi, Includes Switch on Dash

Feature Applicability to Vehicle Platforms:

- Line (LT)
- Regional Haul (RH)
- Heavy Vocational (HV)
- Heavy Extreme (HX) 2021 and Newer

Note: Unlike PTOs that are mounted on other transmissions, PTOs for the T14 are supplied by International. It is beneficial to specify the desired PTO when the vehicle is ordered.

Note: All T14 transmissions have the required wiring to install the PTO after the truck is built. This increases the ease of upfitting stock trucks that sere not ordered with these features.

Note: Configuring the PTO to be controlled with external switches requires using advanced logic.

Extended Description: This feature provides the customer with the ability to control the PTOs provided by International, with in-dash switches. The PTO switches communicate to the Body Controller, which in turn communicates to the TCM. The TCM controls the activation of the transmission mounted PTOs.

The T14 PTO also provides an option to use a split speed feature. This allows the operator to select a high and low gear in the transmission to drive the PTO.
This operates independently from the PTO speed determined by the engine speed.

Programmable parameters allow customizing the functionality of the PTOs.

- 597743 - BCM PROG, TRANSMISSION PTO Single, Over J1939, with 42 Parameters, for T14 Transmission
- 597307- BCM PROG, TRANSMISSION PTO Dual, Over J1939, with 42 Parameters, for T14 Transmission
- 597521 - BCM PROG, TRANSMISSION PTO Split Speed with Switch
- 597134 - BCM PROG, TRANSMISSION PTO SINGLE/DUAL DRIVE, External Inhibit through Remote Power Module.
- 597704 - BCM PROG TRANSMISSION PTO SINGLE DRIVE, External Request through Body Builder PTO Module.

Note: The parameters below control when the BCM requests PTO engagement from the T14 TCM. There are additional parameters and conditions on the ECM, TCM, and PIM that may also cause the PTO to not engage or disengage. Refer to the International® T14 (2023) Overview: Power Take Off (PTO) Parameters documentation on the Body Builder website.

Body Controller Software Feature Code Parameters:

All Parameters below are used in features 597743 and 597307							
On – Indicates a 1 is set for the parameter							
Off – Indicates a 0 is set in for this parameter							
Parameters 2069-2149 apply to PTO 1							
Parameter	**ID**	**Description**	**Default**	**Units**	**Min**	**Max**	**Step**
ENGAGEMENT PARAMETERS							

TEM_PTO_Pk_Brake_Engmnt_Inhib	2087	If this Parameter is 1, the PTO will not be engaged if the Park Brake is not set.	OFF	N/A	N/A	N/A	N/A
TEM_PTO_Non_Neut_Engmnt_Inhib	2088	If this Parameter is 1, the PTO will not be engaged if the Transmission is not in Neutral or Park. (Do not use for T14)	OFF	N/A	N/A	N/A	N/A
TEM_PTO_Neut_Engmnt_Inhib	2089	If this Parameter is 1, the PTO will only be engaged if the Transmission is not in Neutral or Park (Do not use with T14)	OFF	N/A	N/A	N/A	N/A
TEM_PTO_Veh_Spd_Engmnt_Inhib	2090	If this Parameter is 1, the PTO will not be engaged if the vehicle speed is over the value set in TEM_PTO_Veh_Spd_Engmnt_Limit	ON	N/A	N/A	N/A	N/A
TEM_PTO_Veh_Spd_Engmnt_Limit	2091	See TEM_PTO_Veh_Spd_Engmnt_Inhib	3.00	MPH	1	100	1
TEM_PTO_Eng_Spd_Engmnt_Inhib	2092	If this Parameter is 1, the PTO will not be engaged if the engine speed is over the value set in TEM_PTO_Eng_Spd_Engmnt_Limit	ON	N/A	N/A	N/A	N/A
TEM_PTO_Eng_Spd_Engmnt_Limit	2093	See TEM_PTO_Eng_Spd_Engmnt_Inhib	1000	RPM	100	5000	0.1
TEM_PTO_Cltch_Engmnt_Inhib	2094	If this Parameter is 1, the PTO will not be engaged if the clutch pedal is not depressed. (Do not use with T14)	OFF	N/A	N/A	N/A	N/A
TEM_PTO_Brake_Engmnt_Inhib	2095	If this Parameter is 1, the PTO will not be engaged if the brake pedal is not depressed	OFF	N/A	N/A	N/A	N/A
TEM_PTO_Eng_Run_Engmnt_Inhib	2096	If this Parameter is 1, the PTO will not be engaged if the engine is not running	ON	N/A	N/A	N/A	N/A
TEM_PTO_Air_Pres_Engmnt_Inhib	2097	If this Parameter is 1, the PTO will not be engaged if the primary vehicle air pressure is below TEM_PTO_Air_Pres_Engmnt_Limit	ON	N/A	N/A	N/A	N/A
TEM_PTO_Air_Pres_Engmnt_Limit	2098	See TEM_PTO_Air_Pres_Engmnt_Inhib	90	PSI	1	500	1
TEM_PTO_Mast_Swtch_Engmnt_Inhib	2099	If this Parameter is 1, the PTO will not be engaged if the vehicle master switch is not ON.	OFF	N/A	N/A	N/A	N/A
DISENGAGEMENT PARAMETERS							
TEM_PTO_Pk_Brake_Disengages	2108	if this Parameter is 1, the PTO will be disengaged if the Park Brake is released	OFF	N/A	N/A	N/A	N/A
TEM_PTO_Non_Neut_Disengages	2109	if this Parameter is 1, the PTO will be disengaged if the transmission is taken out of neutral	OFF	N/A	N/A	N/A	N/A
TEM_PTO_Veh_Spd_Disengages	2110	if this Parameter is 1, the PTO will be disengaged if the vehicle speed is over the value set in TEM_PTO_Veh_Spd_DisEng_Limit	OFF	N/A	N/A	N/A	N/A
TEM_PTO_Veh_Spd_DisEng_Limit	2111	see TEM_PTO_Veh_Spd_Disengages	3	MPH	3	100	1
TEM_PTO_Eng_Spd_Disengages	2112	if this Parameter is 1, the PTO will be disengaged if the vehicle speed is over the value set in TEM_PTO_Eng_Spd_DisEng_Limit	OFF	N/A	N/A	N/A	N/A

TEM_PTO_Eng_Spd_DisEng_Limit	2113	see TEM_PTO_Eng_Spd_Disengages	2000	RPM	0	5000	1
TEM_PTO_Eng_Run_Disengages	2114	If this Parameter is 1, the PTO will be disengaged if the engine is turned off	ON	N/A	N/A	N/A	N/A
TEM_PTO_Air_Pres_Disengages	2115	if this Parameter is 1, the PTO will be disengaged if the primary air pressure is below the value set in TEM_PTO_Air_Pres_DisEng_Limit	ON	N/A	N/A	N/A	N/A
TEM_PTO_Air_Pres_DisEng_Limit	2116	see TEM_PTO_Air_Pres_Disengages	80	PSI	0	500	1
TEM_PTO_Ext_Input_Disengages	2117	if this Parameter is 1, the PTO will be disengaged if the external input designated for this purpose is active	OFF	N/A	N/A	N/A	N/A
TEM_PTO_Mast_Swtch_Disengages	2118	if this Parameter is 1, the PTO will be disengaged if the vehicle master switch is not ON	OFF	N/A	N/A	N/A	N/A
RE-ENGAGEMENT PARAMETERS							
TEM_PTO_Key_State_Allow_ReEng	2069	If this parameter is set, the PTO will be allowed to reengage when the key state is returned to run.	OFF	N/A	N/A	N/A	N/A
TEM_PTO_Veh_Spd_Allow_ReEng	2119	if this Parameter is 1, the PTO will be reengaged after a disengage due to vehicle overspeed when the vehicle speed is below TEM_PTO_Veh_Spd_Engmnt_Limit	OFF	N/A	N/A	N/A	N/A
TEM_PTO_Eng_Spd_Allow_ReEng	2120	if this Parameter is 1, the PTO will be reengaged after a disengage due to engine overspeed when the engine speed is below TEM_PTO_Eng_Spd_Engmnt_Limit	ON	N/A	N/A	N/A	N/A
TEM_PTO_Ext_Input_Allow_ReEng	2121	if this Parameter is 1, the PTO will be reengaged after a disengage due to the designated external input when the external input is no longer active	OFF	N/A	N/A	N/A	N/A
TEM_PTO_Eng_Run_Allow_ReEng	2122	if this Parameter is 1, the PTO will be reengaged after a disengage due to the engine stopping when the engine is restarted	OFF	N/A	N/A	N/A	N/A
TEM_PTO_Mast_Swtch_Allow_ReEng	2123	if this Parameter is 1, the PTO will be reengaged after a disengage due to the master switch being turned off when the master switch is turned on again	OFF	N/A	N/A	N/A	N/A
TEM_PTO_Air_Pres_Allow_ReEng	2124	if this Parameter is 1, the PTO will be reengaged after a disengage due to low vehicle air pressure when the primary air pressure is over TEM_PTO_Air_Pres_Engmnt_Limit	OFF	N/A	N/A	N/A	N/A
TEM_PTO_Non_Neut_Allow_ReEng	2148	if this Parameter is 1, the PTO will be reengaged after a disengage due to transmission out of neutral when the transmission is placed back into neutral.	OFF	N/A	N/A	N/A	N/A
TEM_PTO_Pk_Brake_Allow_ReEng	2149	if this Parameter is 1, the PTO will be reengaged after a disengage due to park brake released when the park brake is reapplied.	OFF	N/A	N/A	N/A	N/A

ALARMS PARAMETERS							
TEM_PTO_Pk_Brake_Alarms	2131	if this Parameter is 1, an alarm will sound if the PTO is engaged, and the park brake is released	OFF	N/A	N/A	N/A	N/A
TEM_PTO_Non_Neut_Alarms	2132	if this Parameter is 1, an alarm will sound if the PTO is engaged, and transmission is taken out of neutral	OFF	N/A	N/A	N/A	N/A
TEM_PTO_Veh_Spd_Alarms	2133	if this Parameter is 1, an alarm will sound if the PTO is engaged, and the vehicle speed is over TEM_PTO_Veh_Spd_Alarm_Limit	OFF	N/A	N/A	N/A	N/A
TEM_PTO_Veh_Spd_Alarm_Limit	2134	See TEM_PTO_Veh_Spd_Alarms	5	MPH	3	100	1
TEM_PTO_Eng_Spd_Alarms	2135	if this Parameter is 1, an alarm will sound if the PTO is engaged, and the engine speed is over TEM_PTO_Eng_Spd_Alarm_Limit	OFF	N/A	N/A	N/A	N/A
TEM_PTO_Eng_Spd_Alarm_Limit	2136	See TEM_PTO_Eng_Spd_Alarms	1400	RPM	0	5000	0.1
TEM_PTO_Eng_Run_Alarms	2137	if this Parameter is 1, an alarm will sound if the PTO is engaged, and the engine is turned off	OFF	N/A	N/A	N/A	N/A
TEM_PTO_Air_Pres_Alarms	2138	if this Parameter is 1, an alarm will sound if the primary air pressure is below TEM_PTO_Air_Pres_Alarm_Limit	OFF	N/A	N/A	N/A	N/A
TEM_PTO_Air_Pres_Alarm_Limit	2139	See TEM_PTO_Air_Pres_Alarms	0	PSI	0	500	1
Parameters 2676-2772 only apply to PTOb (PTO 2) and are Exclusive to 597307							
ENGAGEMENT PARAMETERS							
TEM_PTOb_Brake_Engmnt_Inhib	2676	If this Parameter is 1, PTOb will not be engaged if the brake pedal is not depressed	OFF	N/A	N/A	N/A	N/A
TEM_PTOb_Cltch_Engmnt_Inhib	2677	If this Parameter is 1, PTOb will not be engaged if the clutch pedal is not depressed (do not use with T14)	OFF	N/A	N/A	N/A	N/A
TEM_PTOb_Eng_Run_Engmnt_Inhib	2678	If this Parameter is 1, PTOb will not be engaged if the engine is not running	ON	N/A	N/A	N/A	N/A
TEM_PTOb_Eng_Spd_Engmnt_Inhib	2679	If this Parameter is 1, PTOb will not be engaged if the engine speed is over the value set in TEM_PTOb_Eng_Spd_Engmnt_Limit	ON	N/A	N/A	N/A	N/A
TEM_PTOb_Eng_Spd_Engmnt_Limit	2680	See TEM_PTOb_Eng_Spd_Engmnt_Inhib	1000	RPM	100	5000	0.1
TEM_PTOb_Neut_Engmnt_Inhib	2681	If this Parameter is 1, PTOb will only be engaged if the Transmission is NOT in Neutral or Park	OFF	N/A	N/A	N/A	N/A
TEM_PTOb_Non_Neut_Engmnt_Inhib	2682	If this Parameter is 1, PTOb will not be engaged if the Transmission is not in Neutral or Park	OFF	N/A	N/A	N/A	N/A
TEM_PTOb_PK_Brake_Engmnt_Inhib	2683	If this Parameter is 1, PTOb will not be engaged if the Park Brake is not set.	OFF	N/A	N/A	N/A	N/A

TEM_PTOb_Veh_Spd_Engmnt_Inhib	2684	If this Parameter is 1, PTOb will not be engaged if the vehicle speed is over the value set in TEM_PTOb_Veh_Spd_Engmnt_Limit	ON	N/A	N/A	N/A	N/A
TEM_PTOb_Veh_Spd_Engmnt_Limit	2685	See TEM_PTOb_Veh_Spd_Engmnt_Inhib	3.00	MPH	1	100	1
TEM_PTOb_Air_Pres_Engmnt_Inhib	2711	If this Parameter is 1, PTOb will not be engaged if the primary vehicle air pressure is below TEM_PTOb_Air_Pres_Engmnt_Limit	ON	N/A	N/A	N/A	N/A
TEM_PTOb_Air_Pres_Engmnt_Limit	2712	See TEM_PTOb_Air_Pres_Engmnt_Inhib	90	PSI	1	500	1
TEM_PTOb_Mast_Swtch_Engmnt_Inhib	2714	If this Parameter is 1, PTOb will not be engaged if the vehicle master switch is not ON.	OFF	N/A	N/A	N/A	N/A
DISENGAGEMENT PARAMETERS							
TEM_PTOb_Eng_Run_Disengages	2686	If this Parameter is 1, PTOb will be disengaged if the engine is turned off	ON	N/A	N/A	N/A	N/A
TEM_PTOb_Eng_Spd_DisEng_Limit	2687	see TEM_PTOb_Eng_Spd_Disengages	2000	RPM	0	5000	1
TEM_PTOb_Eng_Spd_Disengages	2688	if this Parameter is 1, PTOb will be disengaged if the vehicle speed is over the value set in TEM_PTO_Eng_Spd_DisEng_Limit	OFF	N/A	N/A	N/A	N/A
TEM_PTOb_Non_Neut_Disengages	2689	if this Parameter is 1, PTOb will be disengaged if the transmission is taken out of neutral	OFF	N/A	N/A	N/A	N/A
TEM_PTOb_Pk_Brake_Disengages	2690	if this Parameter is 1, PTOb will be disengaged if the Park Brake is released	OFF	N/A	N/A	N/A	N/A
TEM_PTOb_Veh_Spd_Disengages	2691	if this Parameter is 1, PTOb will be disengaged if the vehicle speed is over the value set in TEM_PTOb_Veh_Spd_DisEng_Limit	OFF	N/A	N/A	N/A	N/A
TEM_PTOb_Veh_Spd_DisEng_Limit	2692	see TEM_PTOb_Veh_Spd_Disengages	3	MPH	3	100	1
TEM_PTOb_Mast_Swtch_Disengages	2718	if this Parameter is 1, PTOb will be disengaged if the vehicle master switch is not ON	OFF	N/A	N/A	N/A	N/A
TEM_PTOb_Air_Pres_Disengages	2716	if this Parameter is 1, PTOb will be disengaged if the primary air pressure is below the value set in TEM_PTOb_Air_Pres_DisEng_Limit	ON	N/A	N/A	N/A	N/A
TEM_PTOb_Air_Pres_DisEng_Limit	2719	see TEM_PTOb_Air_Pres_Disengages	80	PSI	0	500	1
TEM_PTOb_Ext_Input_Disengages	2772	if this Parameter is 1, PTOb will be disengaged if the external input designated for this purpose is active	OFF	N/A	N/A	N/A	N/A
RE-ENGAGEMENT PARAMETERS							

TEM_PTOb_Eng_Run_Allow_ReEng	2693	if this Parameter is 1, PTOb will be reengaged after a disengage due to the engine stopping when the engine is restarted	OFF	N/A	N/A	N/A	N/A
TEM_PTOb_Eng_Spd_Allow_ReEng	2694	if this Parameter is 1, PTOb will be reengaged after a disengage due to engine overspeed when the engine speed is below TEM_PTOb_Eng_Spd_Engmnt_Limit	ON	N/A	N/A	N/A	N/A
TEM_PTOb_Key_State_Allow_ReEng	2696	If this parameter is set, PTOb will be allowed to reengage when the key state is returned to run.	OFF	N/A	N/A	N/A	N/A
TEM_PTOb_Non_Neut_Allow_ReEng	2697	if this Parameter is 1, PTOb will be reengaged after a disengage due to transmission out of neutral when the transmission is placed back into neutral.	OFF	N/A	N/A	N/A	N/A
TEM_PTOb_Pk_Brake_Allow_ReEng	2698	if this Parameter is 1, PTOb will be reengaged after a disengage due to park brake released when the park brake is reapplied.	OFF	N/A	N/A	N/A	N/A
TEM_PTOb_Veh_Spd_Allow_ReEng	2699	if this Parameter is 1, PTOb will be reengaged after a disengage due to vehicle overspeed when the vehicle speed is below TEM_PTOb_Veh_Spd_Engmnt_Limit	OFF	N/A	N/A	N/A	N/A
TEM_PTOb_Air_Pres_Allow_ReEng	2713	if this Parameter is 1, PTOb will be reengaged after a disengage due to low vehicle air pressure when the primary air pressure is over TEM_PTOb_Air_Pres_Engmnt_Limit	OFF	N/A	N/A	N/A	N/A
TEM_PTOb_Mast_Swtch_Allow_ReEng	2715	if this Parameter is 1, the PTO will be reengaged after a disengage due to the master switch being turned off when the master switch is turned on again	OFF	N/A	N/A	N/A	N/A
TEM_PTOb_Ext_Input_Allow_ReEng	2771	if this Parameter is 1, PTOb will be reengaged after a disengage due to the designated external input when the external input is no longer active	OFF	N/A	N/A	N/A	N/A
ALARMS PARAMETERS							
TEM_PTOb_Air_Pres_Alarms	2700	if this Parameter is 1, an alarm will sound if the primary air pressure is below TEM_PTOb_Air_Pres_Alarm_Limit	OFF	N/A	N/A	N/A	N/A
TEM_PTOb_Air_Pres_Alarm_Limit	2701	See TEM_PTOb_Air_Pres_Alarms	0	PSI	0	500	1
TEM_PTOb_Eng_Run_Alarms	2702	if this Parameter is 1, an alarm will sound if PTOb is engaged, and the engine is turned off	OFF	N/A	N/A	N/A	N/A
TEM_PTOb_Eng_Spd_Alarm_Limit	2703	See TEM_PTOb_Eng_Spd_Alarms	1400	RPM	0	5000	0.1
TEM_PTOb_Eng_Spd_Alarms	2704	if this Parameter is 1, an alarm will sound if PTOb is engaged, and the	OFF	N/A	N/A	N/A	N/A

		engine speed is over TEM_PTOb_Eng_Spd_Alarm_Limit					
TEM_PTOb_Non_Neut_Alarms	2705	if this Parameter is 1, an alarm will sound if PTOb is engaged, and transmission is taken out of neutral	OFF	N/A	N/A	N/A	N/A
TEM_PTOb_Pk_Brake_Alarms	2706	if this Parameter is 1, an alarm will sound if PTOb is engaged, and the park brake is released	OFF	N/A	N/A	N/A	N/A
TEM_PTOb_Veh_Spd_Alarms	2708	if this Parameter is 1, an alarm will sound if PTOb is engaged, and the vehicle speed is over TEM_PTOb_Veh_Spd_Alarm_Limit	OFF	N/A	N/A	N/A	N/A
TEM_PTOb_Veh_Spd_Alarm_Limit	2709	See TEM_PTOb_Veh_Spd_Alarms	5	MPH	3	100	1

Parameter Definitions:

Parameters used in 597307 and 597743

- **ENGAGEMENT PARAMETERS**
  These parameters set rules that must be met for the PTO to be engaged.
  Example:
  If TEM_PTO_Air_Pres_Engmnt_Inhib parameter is turned on, the PTO cannot be engaged if the primary vehicle air pressure is below the programmable parameter set by TEM_PTO_Air_Pres_Engmnt_Limit. **for Dash Switch**
- **TEM_PTO_Pk_Brake_Engmnt_Inhib** – 2087 If this parameter is turned on, then the brake pedal must be depressed for the PTO to engage.
- **TEM_PTO_Non_Neut_Engmnt_Inhib** – 2088 If this parameter is turned on, then the transmission must be in Neutral or Park for the PTO to be engaged (Do not use with T14).
- **TEM_PTO_Neut_Engmnt_Inhib** – 2089 If this parameter is turned on, then the PTO can only be engaged if the transmission is NOT in Neutral or Park (Do not use with T14).
- **TEM_PTO_Veh_Spd_Engmnt_Inhib** – 2090 If this parameter is turned on, then the PTO cannot be engaged if the vehicle speed is over the value prescribed by TEM_PTO_Veh_Spd_Engmnt_Limit.
- **TEM_PTO_Veh_Spd_Engmnt_Limit** – 2091 This parameter sets the physical value for the Vehicle Speed Inhibit.
- **TEM_PTO_Eng_Spd_Engmnt_Inhib** –2092 If this is parameter is turned on, then the PTO cannot be engaged if the engine speed is over a certain threshold, which is defined as a programmable parameter in TEM_PTO_Eng_Spd_Engmnt_Limit.
- **TEM_PTO_Eng_Spd_Engmnt_Limit** – 2093 This parameter sets the physical value for the Engine Speed Inhibit.
- **TEM_PTO_Cltch_Engmnt_Inhib** – 2094 If this parameter is turned on, then the clutch pedal must be depressed for the PTO to engage (Do not use with T14).

- **TEM_PTO_Brake_Engmnt_Inhib** – 2095 If this parameter is turned on, then the brake pedal must be depressed for the PTO to engage.
- **TEM_PTO_Eng_Run_Engmnt_Inhib** – 2096 If this parameter is turned on, then the engine must be running for the PTO to be engaged.
- **TEM_PTO_Air_Pres_Engmnt_Inhib** – 2097 If this parameter is turned on, the PTO cannot be engaged if the primary vehicle air pressure is below the programmable parameter set by TEM_PTO_Air_Pres_Engmnt_Limit.
- **TEM_PTO_Air_Pres_Engmnt_Limit** – 2098 This parameter sets the physical value for the Air Pressure Inhibit.
- **TEM_PTO_Mast_Swtch_Engmnt_Inhib** – 2099 If this parameter is turned on, then the PTO will not be engaged if the vehicle master switch is not ON.

- **DISENGAGEMENT PARAMETERS**

  These parameters set the conditions under which the PTO will be disengaged.
- **TEM_PTO_Pk_Brake_Disengages** – 2108 If this parameter is turned on, then the PTO will be disengaged if the Park Brake is released.
- **TEM_PTO_Non_Neut_Disengages** – 2109 If this parameter is turned on, then the PTO will be disengaged if the transmission is taken out of neutral.
- **TEM_PTO_Veh_Spd_Disengages** – 2110 If this parameter is turned on, then the PTO will be disengaged if the vehicle speed is over the valued specified by TEM_PTO_Veh_Spd_DisEng_Limit.
- **TEM_PTO_Veh_Spd_DisEng_Limit** – 2111 This parameter sets the physical value for the Vehicle Speed disengagement.
- **TEM_PTO_Eng_Spd_Disengages** – 2112 If this parameter is turned on, then the PTO will be disengaged if the engine speed rises above the value set by TEM_PTO_Eng_Spd_DisEng_Limit.
- **TEM_PTO_Eng_Spd_DisEng_Limit** – 2113 This parameter sets the physical value for the Engine Speed disengagement.
- **TEM_PTO_Eng_Run_Disengages** – 2114 If this parameter is turned on, then the PTO will be disengaged if the engine is turned off.
- **TEM_PTO_Air_Pres_Disengages** – 2115 If this parameter is turned on, then the PTO will be disengaged if the primary air pressure is below the value set in TEM_PTO_Air_Pres_DisEng_Limit.
- **TEM_PTO_Air_Pres_DisEng_Limit** – 2116 This parameter sets the physical value for the Air Pressure disengagement.
- **TEM_PTO_Ext_Input_Disengages** – 2117 If this parameter is turned on, then the PTO will be disengaged if the external input designated for this purpose is active.
- **TEM_PTO_Mast_Swtch_Disengages** – 2118 If this parameter is turned on, then the PTO will be disengaged if the vehicle master switch is not ON.
- **Re-ENGAGEMENT PARAMETERS**

These parameters set the conditions under which the PTO will be re-engaged due to a parameter disengagement.

- **TEM_PTO_Key_State_Allow_ReEng** – 2069 If this parameter is turned on, then the PTO will be allowed to reengage when the key state is returned to run.
- **TEM_PTO_Veh_Spd_Allow_ReEng** – 2119 If this parameter is turned on, then the PTO will be reengaged (after disengagement due to the vehicle being over the vehicle speed value) when the vehicle speed falls below TEM_PTO_Veh_Spd_Engmnt_Limit.
- **TEM_PTO_Eng_Spd_Allow_ReEng** – 2120 If this parameter is turned on, then the PTO will be reengaged (after disengagement due to engine overspeed) when the engine speed falls below TEM_PTO_Eng_Spd_Engmnt_Limit.
- **TEM_PTO_Ext_Input_Allow_ReEng** – 2121 If this parameter is turned on, then the PTO will be reengaged (after a disengage due to the designated external input being in active state) when the external input is no longer in active state.
- **TEM_PTO_Eng_Run_Allow_ReEng** – 2122 If this parameter is turned on, then the PTO will be reengaged (after disengagement due to engine stopping) when the engine is restarted.
- **TEM_PTO_Mast_Swtch_Allow_ReEng** – 2123 If is turned on, then the PTO will be reengaged after a disengage due to the master switch being turned off when the master switch is turned on again.
- **TEM_PTO_Air_Pres_Allow_ReEng** – 2124 If this parameter is turned on, then the PTO will be reengaged (after disengagement due to low air pressure) when the primary air pressure rises about the value specified by TEM_PTO_Air_Pres_Engmnt_Limit.
- **TEM_PTO_Non_Neut_Allow_ReEng** – 2148 If this parameter is turned on, then the PTO will be reengaged (after disengagement due to transmission out of neutral) when the transmission is placed back into neutral.
- **TEM_PTO_Pk_Brake_Allow_ReEng** – 2149 If this parameter is turned on, then the PTO will be reengaged (after disengagement due to park brake released) when the park brake is reapplied.
- **ALARM PARAMETERS**

  These parameters utilize the gauge cluster to sound an alarm to the driver when certain programmable parameters are violated.
- **TEM_PTO_Pk_Brake_Alarms** – 2131 If this parameter is turned on, then an audible alarm will sound in the cab if the PTO is engaged, and the park brake is released.
- **TEM_PTO_Non_Neut_Alarms** – 2132 If this parameter is turned on, then an audible alarm will sound in the cab if the PTO is engaged, and the transmission is taken out of neutral.

- **TEM_PTO_Veh_Spd_Alarms** – 2133 If this is turned on, then an audible alarm will sound if the PTO is engaged, and the vehicle speed is over the value set by TEM_PTO_Veh_Spd_Alarm_Limit
- **TEM_PTO_Veh_Spd_Alarm_Limit** – 2134 This parameter sets the physical value for the Vehicle Speed Alarm.
- **TEM_PTO_Eng_Spd_Alarms** – 2135 If this is turned on, then an alarm will sound if the PTO is engaged, and the engine speed is over the value set by TEM_PTO_Eng_Spd_Alarm_Limit
- **TEM_PTO_Eng_Spd_Alarm_Limit** – 2136 This parameter sets the physical value for the Engine Speed Alarm.
- **TEM_PTO_Eng_Run_Alarms** – 2137 If this parameter is turned on, then an audible alarm will sound in the cab if the PTO is engaged, and the engine is turned off.
- **TEM_PTO_Air_Pres_Alarms** – 2138 If this parameter is turned on, then an audible alarm will sound in the cab if the primary air pressure drops below the value specified by TEM_PTO_Air_Pres_Alarm_Limit.
- **TEM_PTO_Air_Pres_Alarm_Limit** – 2139 This parameter sets the physical value for the Air Pressure Alarm.
- **PTOb specific parameters used only with feature 597307**
- **ENGAGEMENT PARAMETERS PTOb**
- **TEM_PTOb_Brake_Engmnt_Inhib** – 2676 If this parameter is turned on, then the brake pedal must be depressed for PTOb to engage.
- **TEM_PTOb_Cltch_Engmnt_Inhib** – 2677 If this parameter is turned on, then the clutch pedal must be depressed for PTOb to engage (do not use on T14).
- **TEM_PTOb_Eng_Run_Engmnt_Inhib** – 2678 If this parameter is turned on, then the engine must be running for PTOb to be engaged.
- **TEM_PTOb_Eng_Spd_Engmnt_Inhib** –2679 If this is parameter is turned on, then PTOb cannot be engaged if the engine speed is over a certain threshold, which is defined as a programmable parameter in TEM_PTOb_Eng_Spd_Engmnt_Limit.
- **TEM_PTOb_Eng_Spd_Engmnt_Limit** – 2680 This parameter sets the physical value for the Engine Speed Inhibit.
- **TEM_PTOb_Neut_Engmnt_Inhib** – 2681 If this parameter is turned on, then PTOb can only be engaged if the transmission is NOT in Neutral or Park (Do not use on T14)**.**
- **TEM_PTOb_Non_Neut_Engmnt_Inhib** – 2682 If this parameter is turned on, then the transmission must be in Neutral or Park for PTOb to be engaged.
- **TEM_PTOb_Pk_Brake_Engmnt_Inhib** – 2683 If this parameter is turned on, then the brake pedal must be depressed for PTOb to engage.
- **TEM_PTOb_Veh_Spd_Engmnt_Inhib** – 2684 If this parameter is turned on, then PTOb cannot be engaged if the vehicle speed is over the value prescribed by TEM_PTO_Veh_Spd_Engmnt_Limit.

- **TEM_PTOb_Veh_Spd_Engmnt_Limit** – 2685 This parameter sets the physical value for the Vehicle Speed Inhibit.
- **TEM_PTOb_Air_Pres_Engmnt_Inhib** – 2711 If this parameter is turned on, PTOb cannot be engaged if the primary vehicle air pressure is below the programmable parameter set by TEM_PTOb_Air_Pres_Engmnt_Limit.
- **TEM_PTOb_Air_Pres_Engmnt_Limit** – 2712 This parameter sets the physical value for the Air Pressure Inhibit for PTOb.
- **TEM_PTOb_Mast_Swtch_Engmnt_Inhib** – 2714 If this parameter is turned on, then PTOb will not be engaged if the vehicle master switch is not ON.

- **DISENGAGEMENT PARAMETERS PTOb**
- **These parameters set the conditions under which PTOb will be disengaged**
- **TEM_PTOb_Eng_Run_Disengages** – 2686 If this parameter is turned on, then PTOb will be disengaged if the engine is turned off.
- **TEM_PTOb_Eng_Spd_DisEng_Limit** – 2687 This parameter sets the physical value for the Engine Speed disengagement.
- **TEM_PTOb_Eng_Spd_Disengages** – 2688 If this parameter is turned on, then PTOb will be disengaged if the engine speed rises above the value set by TEM_PTOb_Eng_Spd_DisEng_Limit.
- **TEM_PTOb_Non_Neut_Disengages** – 2689 If this parameter is turned on, then PTOb will be disengaged if the transmission is taken out of neutral.
- **TEM_PTOb_Pk_Brake_Disengages** – 2690 If this parameter is turned on, then PTOb will be disengaged if the Park Brake is released.
- **TEM_PTOb_Veh_Spd_Disengages** – 2691 If this parameter is turned on, then PTOb will be disengaged if the vehicle speed is over the valued specified by TEM_PTOb_Veh_Spd_DisEng_Limit.
- **TEM_PTOb_Veh_Spd_DisEng_Limit** – 2692 This parameter sets the physical value for the Vehicle Speed disengagement.
- **TEM_PTOb_Mast_Swtch_Disengages** – 2718 If this parameter is turned on, then PTOb will be disengaged if the vehicle master switch is not ON.
- **TEM_PTOb_Air_Pres_Disengages** – 2716 If this parameter is turned on, then PTOb will be disengaged if the primary air pressure is below the value set in TEM_PTOb_Air_Pres_DisEng_Limit.
- **TEM_PTOb_Air_Pres_DisEng_Limit** – 2719 This parameter sets the physical value for the Air Pressure disengagement for PTOb.
- **TEM_PTOb_Ext_Input_Disengages** – 2772 If this parameter is turned on, then PTOb will be disengaged if the external input designated for this purpose is active.
- **Re-ENGAGEMENT PARAMETERS PTOb**
  These parameters set the conditions under which PTOb will be re-engaged due to a parameter disengagement.

- **TEM_PTOb_Eng_Run_Allow_ReEng** – 2693 If this parameter is turned on, then PTOb will be reengaged (after disengagement due to engine stopping) when the engine is restarted.
- **TEM_PTOb_Eng_Spd_Allow_ReEng** – 2694 If this parameter is turned on, then PTOb will be reengaged (after disengagement due to engine overspeed) when the engine speed falls below TEM_PTOb_Eng_Spd_Engmnt_Limit.
- **TEM_PTOb_Key_State_Allow_ReEng** – 2696 If this parameter is turned on, then PTOb will be allowed to reengage when the key state is returned to run.
- **TEM_PTOb_Non_Neut_Allow_ReEng** – 2697 If this parameter is turned on, then PTOb will be reengaged (after disengagement due to transmission out of neutral) when the transmission is placed back into neutral.
- **TEM_PTOb_Pk_Brake_Allow_ReEng** – 2698 If this parameter is turned on, then PTOb will be reengaged (after disengagement due to park brake released) when the park brake is reapplied.
- **TEM_PTOb_Veh_Spd_Allow_ReEng** – 2699 If this parameter is turned on, then PTOb will be reengaged (after disengagement due to the vehicle being over the vehicle speed value) when the vehicle speed falls below TEM_PTOb_Veh_Spd_Engmnt_Limit.
- **TEM_PTOb_Air_Pres_Allow_ReEng** – 2713 If this parameter is turned on, then PTOb will be reengaged (after disengagement due to low air pressure) when the primary air pressure rises about the value specified by TEM_PTO_Air_Pres_Engmnt_Limit.
- **TEM_PTOb_Mast_Swtch_Allow_ReEng** – 2715 If is turned on, then PTOb will be reengaged after a disengage due to the master switch being turned off when the master switch is turned on again.
- **TEM_PTOb_Ext_Input_Allow_ReEng** – 2771 If this parameter is turned on, then PTOb will be reengaged (after a disengage due to the designated external input being in active state) when the external input is no longer in active state.

- **ALARM PARAMETERS PTOb**

  These parameters utilize the gauge cluster to sound an alarm to the driver when certain programmable parameters are violated.
- **TEM_PTOb_Air_Pres_Alarms** – 2700 If this parameter is turned on, then an audible alarm will sound in the cab if the primary air pressure drops below the value specified by TEM_PTOb_Air_Pres_Alarm_Limit.
- **TEM_PTOb_Air_Pres_Alarm_Limit** – 2701 This parameter sets the physical value for the Air Pressure Alarm.
- **TEM_PTOb_Eng_Run_Alarms** – 2702 If this parameter is turned on, then an audible alarm will sound in the cab if PTOb is engaged, and the engine is turned off.

- **TEM_PTOb_Eng_Spd_Alarm_Limit** – 2703 This parameter sets the physical value for the Engine Speed Alarm.
- **TEM_PTOb_Eng_Spd_Alarms** – 2704 If this is turned on, then an alarm will sound if PTOb is engaged, and the engine speed is over the value set by TEM_PTOb_Eng_Spd_Alarm_Limit
- **TEM_PTOb_Non_Neut_Alarms** – 2705 If this parameter is turned on, then an audible alarm will sound in the cab if PTOb is engaged, and the transmission is taken out of neutral.
- **TEM_PTOb_Pk_Brake_Alarms** – 2706 If this parameter is turned on, then an audible alarm will sound in the cab if PTOb is engaged, and the park brake is released.
- **TEM_PTOb_Veh_Spd_Alarms** – 2708 If this is turned on, then an audible alarm will sound if PTOb is engaged, and the vehicle speed is over the value set by TEM_PTOb_Veh_Spd_Alarm_Limit
- **TEM_PTOb_Veh_Spd_Alarm_Limit** – 2709 This parameter sets the physical value for PTOb Vehicle Speed Alarm.

TCM Software Parameters:

Refer to the International® T14 (2023) Overview: Power Take Off (PTO) Parameters documentation.

CEM1 Controller Software Parameters:

Refer to the International® T14 (2023) Overview: Power Take Off (PTO) Parameters documentation.

Parts Associated with This Feature:

PART NUMBER	DESCRIPTION
4102438C1	SWITCH ELECTRONIC, PTO 1 - 2 POS - BISTABLE
4102439C1	SWITCH ELECTRONIC, PTO 2 - 2 POS - BISTABLE
4234487C1	SWITCH, MUX, TRANS PTO SPLIT HIGH/LOW

Parts Associated with This Feature

How to Test This Feature:

1. Verify that all enabled interlock conditions are met and depress the PTO switches.
2. Verify that the PTO Switches illuminate with a solid indicator. A slow flashing indicator identifies that an interlock is not being met. A fast-flashing indicator indicates that there is a fault in the system.
3. Test all interlocks by violating the programmable parameters to ensure the PTOs disengage.

Note: This feature uses body controller-based software controls which can be diagnosed with The International® Diamond Logic® Builder and SDS software.

References:
Refer to the applicable International® Circuit Diagrams and Service Manuals.

34.2. 60AME T14 Split Shaft PTO Customer provided Transfer Case

Feature Applicability to Vehicle Platforms:

- Heavy Vocational (HV)
- Heavy Extreme (HX)

Extended Description: This feature provides the capability to use advanced logic to enable an input, such as a switch in the six pack or an RPM input, to activate the Split Shaft PTO air solenoid drivers.

This feature provides the ability to control the customer-supplied Split Shaft PTO two air solenoids. All of the wiring to the air solenoids located inside the driver's side frame rail next to the transmission. Customers must supply and route air plumbing to the transfer case.

Feedback circuits may be provided that must be satisfied to allow the solenoids to remain engaged.

Programmable parameters allow customers to customize the functionality of this feature as desired.

A new Virtual Gauge (Premium) and Digital Readout (Base) is provided to display the output shaft speed to the PTO.

Output Shaft Speed

1. The output shaft speed receives more than 30 rpm then the device shall display the following gauge.
   - virtual gauge for Output Shaft Speed in the premium trim level
   - digital gauge for shaft speed in the base trim level when Aux/Vir Gauge 8 Configuration = (10b) PTO Output Shaft Speed
2. The output shaft speed will be received on the PGN-64206 SPN-12960, from the SA:0x03 defined in this gauge's configuration.
3. In base clusters the virtual gauge is equal to digital gauge and shall follow the conditions below to display the shaft speed.
   - The valid range of digital gauge is from 0 to 3000 rpm.
   - If the shaft speed value is greater than the maximum value of (3000)rpm then it shall set the speed of 3000 rpm.

The Transmission Split Shaft PTO feature allows the user to switch between Drive Mode and Split Shaft PTO mode. Drive Mode allows the transfer case to drive the rear axle so the vehicle can drive as normal. Split Shaft PTO Mode allows the transfer case to disengage the rear axle and drive a Split Shaft PTO device. The driver can only switch while the vehicle is not moving, park brake is set, and vehicle is in neutral. A pop-up text message of SSPTO engagement is displayed on the Electronic Gauge Cluster (applicable for Premium cluster).

This implementation defines the 3-point engagement/disengagement strategy employed utilizing Request, Consent and Confirmation signals. The BCM sends the request to the TCM for SSPTO Engagement, and the Engagement consent is received from the TCM. Then the BCM engages the split shaft PTO and sends a confirmation to the TCM and the EGC as Drive Engage/not engaged when the hardwire feedback is received from SSPTO device.

PTO_Mode_Solenoid_Cmd	1601-F4	Relay Driver Output
Drive_Mode_Solenoid_Cmd	1601-E13	Relay Driver Output

SSPTO_Enable_Req_Msg	J1939 Output
PTO_Transmission_Output_Shaft_Engagement_Status	J1939 Output
EGC_Warning_Light_25	J1939 Output
Split_Shaft_PTO_Switch_Ind_Cmd	J1939 Output
Split_Shaft_PTO_Switch_Ind_Color	J1939 Output

Split Shaft PTO support programming, using SDS and DLB, is accomplished with combinations of BCM, ECM and TCM programming.

TCM programming determines the PTO configuration for the Split Shaft PTO. Parameters are configures with SDS. See the TCM Split Shaft PTO programing guide

BCM programming determines how the inputs are configured to support the Split Shaft PTO.

ECM Programming supports engine and vehicle speed limits and accelerator pedal interaction while in split shaft PTO mode.

System Block Diagram:

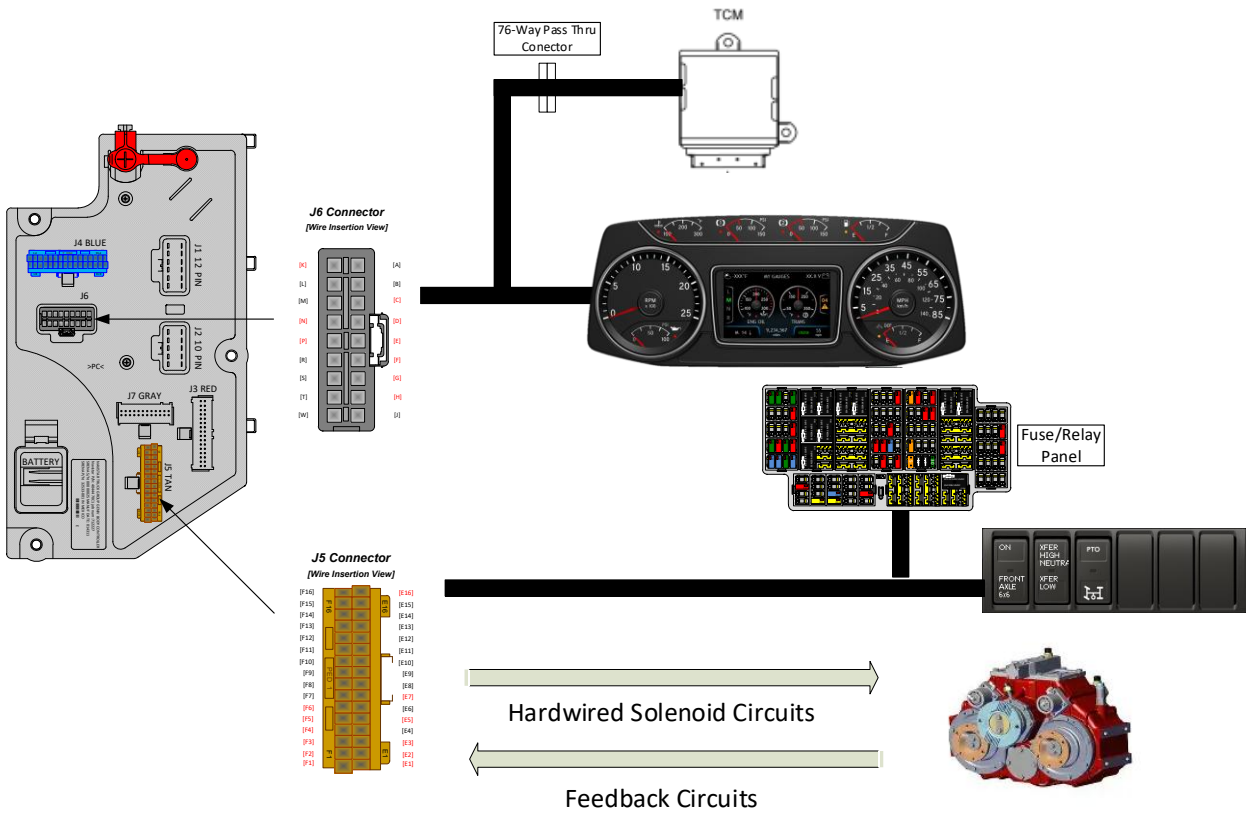

Body Controller Software Feature Codes:

NOTE: Adding this feature will require International engineering support and advanced logic. Contact your dealer to request support.

0597862 BCM PROG, PTO SPLIT SHAFT for E44

4191 PTO_Shaft_Speed Parameter

4192 PTO_Shaft_Speed_Minimum_Warning Light Set Point

4193 PTO_Shaft_Speed_Maximum_Warning Light Set Point

TCM Software Parameters:

Refer to the International® T14 (2023) Overview: Power Take Off (PTO) Parameters documentation.

CEM1 Controller Software Parameters:

Refer to the International® T14 (2023) Overview: Power Take Off (PTO) Parameters documentation.

Parts Associated with This Feature:

PART NUMBER	DESCRIPTION
MULTIPLEX SWITCH-PACK PARTS	
4057689C1	HOUSING, SWITCH 6-PACK DIN MULTIPLEX
4102438C1	SWITCH, PTO #1
AIR SOLENOID 4-PACK PARTS	
2506711C91	KIT AIR UNIVERSAL SOLENOID (NORMALLY CLOSED)
2505594C1	4-PACK AIR SOLENOID BASE
1661375C2	4-PACK AIR SOLENOID BASE 5-CAVITY CONNECTOR
1661376C1	4-PACK AIR SOLENOID BASE 5-CAVITY CONNECTOR LOCK
2033816C1	4-PACK AIR SOLENOID WIRE TERMINAL 14-GAUGE
2033819C1	4-PACK AIR SOLENOID WIRE TERMINAL 18-GAUGE
0589391C1	4-PACK AIR SOLENOID WIRE TERMINAL SEAL 14-GAUGE
2607909C1	4-PACK AIR SOLENOID WIRE TERMINAL SEAL 18-GAUGE
76-WAY CONNECTOR (THERMAL PROTECTION BARRIER PASS THROUGH)	
3574285C1	76-WAY CONNECTOR WIRE TERMINAL FEMALE 14-GUAGE
3574288C1	76-WAY CONNECTOR WIRE TERMINAL FEMALE 16-GUAGE
2003343C1	76-WAY CONNECTOR WIRE TERMINAL FEMALE 18-GUAGE
3549416C1	76-WAY CONNECTOR WIRE TERMINAL MALE 14-GUAGE
3549417C1	76-WAY CONNECTOR WIRE TERMINAL MALE 16-GUAGE
3549418C1	76-WAY CONNECTOR WIRE TERMINAL MALE 18-GUAGE
BODY CONTROL MODULE J5/J6 CONNECTOR PARTS	
3522073C1	32-WAY BODY CONTROLLER J5 (1601/1602) CONNECTOR WIRE TERMINAL 18/20-GAUGE
3534303C1	32-WAY BODY CONTROLLER J5 (1601/1602) CONNECTOR WIRE TERMINAL 20/22-GAUGE
3544878C1	18-WAY BODY CONTROLLER J6 (1606/2023) CONNECTOR WIRE TERMINAL 12-14-GAUGE [GT280]
3544877C1	18-WAY BODY CONTROLLER J6 (1606/2023) CONNECTOR WIRE TERMINAL 14/16-GAUGE [GT280]
3544876C1	18-WAY BODY CONTROLLER J6 (1606/2023) CONNECTOR WIRE TERMINAL 16/18-GAUGE [GT280]
3544875C1	18-WAY BODY CONTROLLER J6 (1606/2023) CONNECTOR WIRE TERMINAL 18/20-GAUGE [GT280]
3544884C1	18-WAY BODY CONTROLLER J6 (1606/2023) CONNECTOR WIRE TERMINAL 16/18-GAUGE [GT150]

3544883C1	18-WAY BODY CONTROLLER J6 (1606/2023) CONNECTOR WIRE TERMINAL 20/22-GAUGE [GT150]

Parts Associated with Feature

How to Test This Feature:

1. Verify that all enabled interlock conditions are met, transmission is in Neutral, then depress the Split Shaft PTO switches.
2. Verify that the air solenoid driver outputs are functioning and the transfer case is shifting.
3. Shift the transmission into drive. The transmission should shift to the programmed gear.

Note: This feature uses body controller-based software controls which can be diagnosed with the International® Diamond Logic® Builder and SDS software.

References:
Refer to the applicable International® Circuit Diagrams and Service Manuals.

34.3. 13WME MANEUVERING MODE

13WME MANEUVERING MODE Maintains Low Speed Throttle Control to Reduce Harsh Driveline Engagement/Disengagement, Enables Slow & Steady Trailer Hook up, Docking & Tight Space Driving, Includes Switch, for T14 Transmission.

Feature Applicability to Vehicle Platforms:

- Heavy Vocational (HV)
- Heavy Extreme (HX)

Extended Description: The Maneuvering Mode feature provides TCM and BCM programming allowing the owner/operator to select the customer programmable parameters for the desired vehicle configuration.
Maneuvering mode, also known as “Precision Pedal”, provides smooth precision clutch control when using accelerator pedal. Initial Vehicle Movement (IVM) and Low Idle Drive Mode will be disabled when in Maneuvering Mode. Maneuvering mode is also useful as a "rock free" mode when vehicle is stuck.

Body Controller Software Feature Codes:

- 0597430 BCM PROG, MANEUVERING MODE

TCM Software Parameters:

- SDS T14 parameter, Activate Maneuvering Mode for PTO - Enables or Disables Maneuvering Mode during PTO operation.

Refer to the International® T14 (2023) Overview: Maneuvering Mode

34.4. 13WMU/13WMV T14 Neutral Force/Hold

13WMU TRANSMISSION SHIFT INHIBITOR Force Neutral; Forces Transmission into Neutral, Transmission will not Shift into Gear When Force Neutral is in Use, with International T14 Transmission Only

13WMV TRANSMISSION SHIFT INHIBITOR Hold Neutral; Holds Transmission in Neutral, Transmission will not Shift into Gear When Hold Neutral is in Use, with International T14 Transmission Only

Feature Applicability to Vehicle Platforms:

- Heavy Vocational (HV)
- Heavy Extreme (HX)

Extended Description: The **T14 transmission neutral force/hold** feature is enabled through programming in the TCM and requires additional configuration in the body controller. This programming determines whether the input is:

- **Sensed at the RPM**,
- **Configured with advanced logic**, or
- **Controlled by an external device connected to the body builder datalink**.

In this mode the transmission will force a neutral condition regardless of the currently selected operator input (Force Neutral) or prevent forward or reverse modes from being achieved if the transmission is already in Neutral (Hold Neutral).

Note: Auto Neutral requests to the T14 TCM are accomplished with messages on the J1939 Data Link. Hard wired inputs are not provided at the TCM.

Body Controller Software Feature Codes:

- 0597790 BCM PROG, Neutral Force/Hold T14 XMSN, for DLB
- 0597791 BCM PROG, Neutral Force/Hold T14 XMSN, for Bodybuilder
- 0597792 BCM PROG, Neutral Force/Hold T14 XMSN, for RPM
- 0597881 BCM PROG, Neutral Force/Hold T14 XMSN, for ERPM

34.5. 13WMZ T14 Paver Assist

13WMZ PAVER ASSIST Allows the Vehicle to Shift From Neutral to Drive Without Requiring the Brake Pedal to be Pressed, for T14 Transmission

NOTE: Available with International T14 transmission and Dump or Paving applications only.

NOTE: Current T14 transmission limitations will not allow the PTO to remain engaged when shifting gears. To reengage the PTO, the truck will have to come to a complete stop and be shifted into neutral. Perform all dump bed operations before pulling away.

Feature Applicability to Vehicle Heavy Extreme (HX)

Extended Description: The **T14 Paver Assist** feature is enabled through programming in the TCM and requires additional configuration in the body controller.

Designed for paving applications where a truck is being pushed by a paver and then needs to pull away smoothly. Allows the operator to shift from Neutral to Drive without applying the service brake, preventing pavement disturbance during the transition.

Body Controller Software Feature Codes:

0597849 BCM PROG, Paver Assist for T14 XMSN

TCM Software Parameters:

SDS parameter Paver Assist Enable - Enables or Disables Paver Assist mode in the T14 transmission.

Refer to the International® T14 (2023) Overview: Paver Assist

Parts Associated with This Feature:

PART NUMBER	DESCRIPTION
MULTIPLEX SWITCH-PACK PARTS	
4057689C1	HOUSING, SWITCH 6-PACK DIN MULTIPLEX
4747739C1	SWITCH, MUX, PAVER ASSIST

Parts Associated with Feature



Part Number 4747739C1

34.6. 60AMB T14 PTO Inhibit

60AMB BODY INTG, PTO INHIBIT, with International T14 Transmission Only

0597134 - BCM PROG TRANSMISSION PTO SINGLE/DUAL DRIVE, External Inhibit through Remote Power Module

- ERPM Support under development

Feature Applicability to Vehicle Platforms:

- Line (LT)

- Regional Haul (RH)
- Heavy Vocational (HV)

Extended Description: The T14 PTO Inhibit feature is enabled with programming in the body controller. An input to the RPM will activate the feature. The value set for Parameter 4029 will determine if a Ground, 12Volt or floating input will activate the feature.

System Block Diagram:

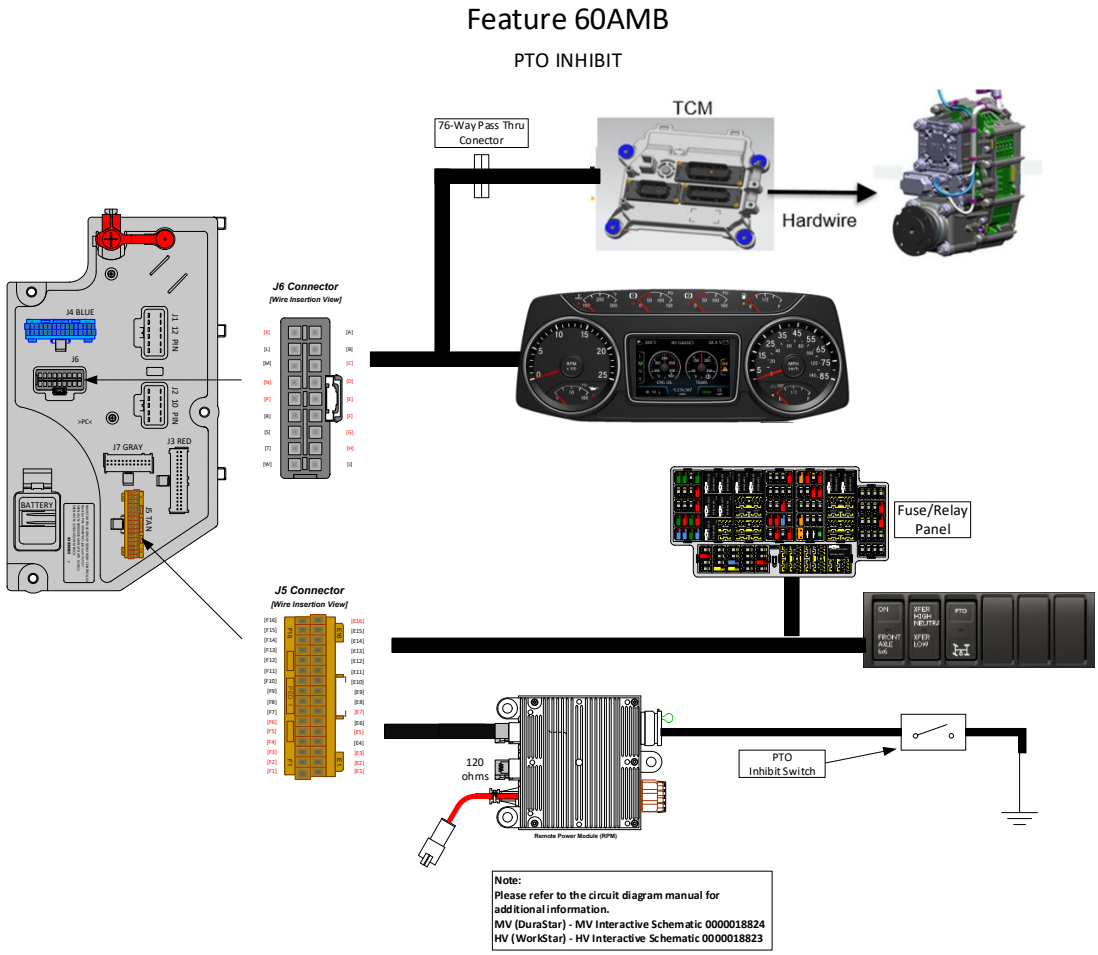

Body Controller Software Feature Codes:

0597134 - BCM PROG TRANSMISSION PTO SINGLE/DUAL DRIVE, External Inhibit through Remote Power Module.

Body Controller Software Feature Code Parameters:

Parameter	ID	Description	Default	Units	Min	Max	Step
EM_PTO_Inhibit_Param_RPM_Input	4029	When RPM input matches this parameter value, RPM input should be active or else it should be inactive.	Ground	None	N/A	N/A	N/A

34.7. 60AMG T14 Transmission Range Limiter

Feature Applicability to Vehicle Platforms:

- Line (LT)
- Regional Haul (RH)
- Heavy Vocational (HV)

Extended Description:

The T14 range limiter temporarily restricts the transmission gears available for use based on programmable parameter setting in the T14 TCM. This feature uses DLB feature code **0597860 BCM PROG, Range Limiting on GW Transmission** to enable advanced logic that can be written to use a switch in the six-pack or another control to determine if range limiting is enabled.

This range is a TCM programmable parameter that can be set to limit the gear range that the vehicle can achieve when this feature is activated.

Advanced logic must be written to use a switch or some other input to make the BCM send a request message to the TCM to activate the feature.

Note: The TCM arbitrates the downshift to meet the Transmission Requested Range at the earliest opportunity.

System Block Diagram:

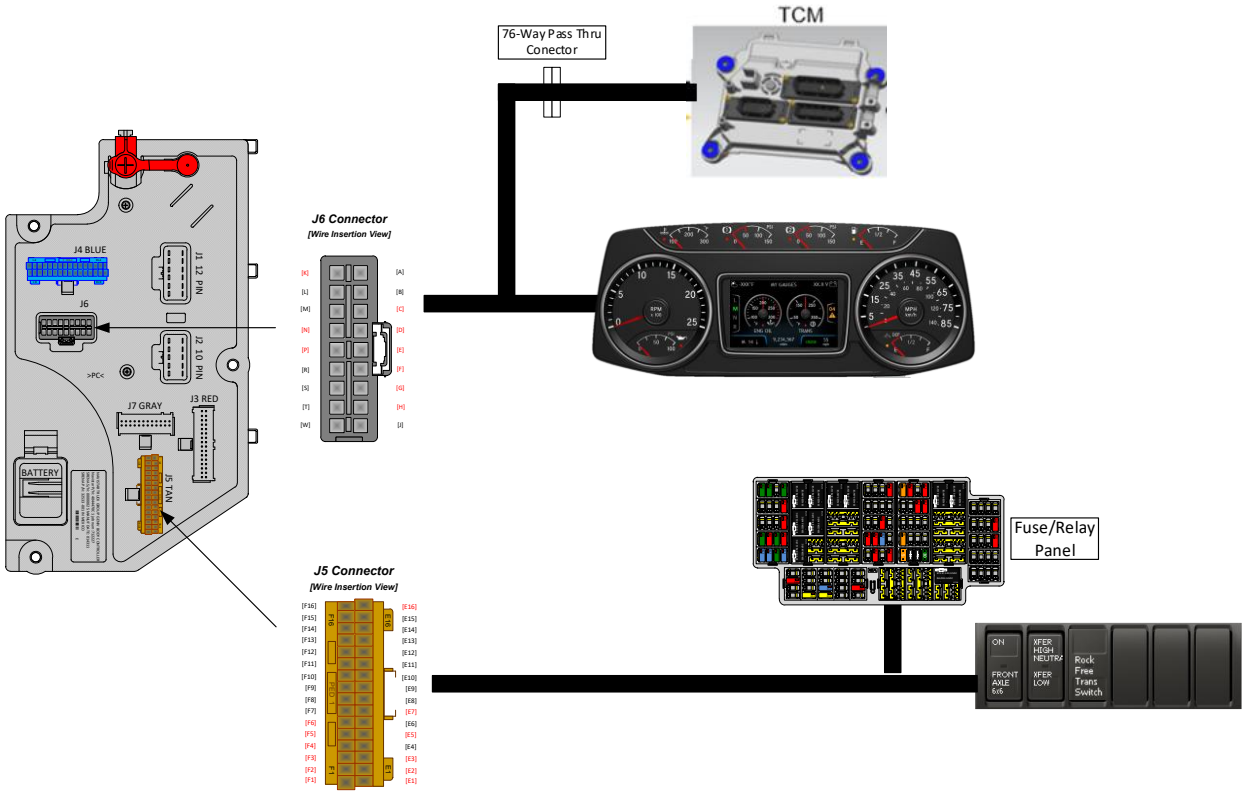

Body Controller Software Feature Codes:

597860 BCM PROG, RANGE LIMITER

Advanced logic Sample:

Transmission

Custom Variable	Used	Signal/Value	Unit
DLB_Range_Li...	☑	DLB_Range_Limiting_Request	On/Off

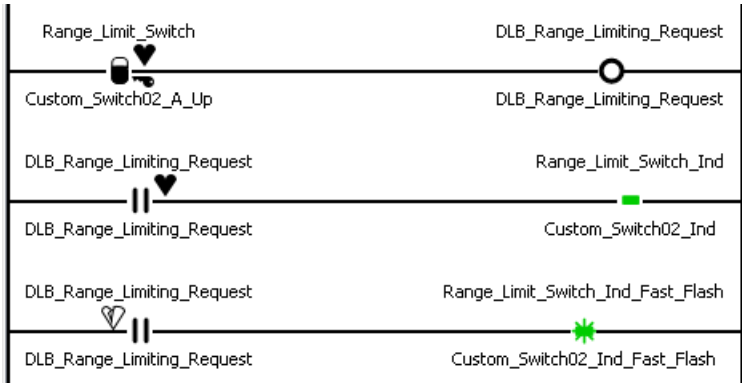

TCM Software Parameters:

SDS parameter Range Limiter Max Gear (RLMG)

Refer to the International® T14 (2023) Overview: Gear Range Limiting

Parts Associated with This Feature:

PART NUMBER	DESCRIPTION
MULTIPLEX SWITCH-PACK PARTS	
4057689C1	HOUSING, SWITCH 6-PACK DIN MULTIPLEX
4084825C1	2-POSITION BISTABLE “RANGE INHIBIT” SWITCH ACTUATOR

Parts Associated with Feature

How to Test This Feature:
1. Press the switch or activate any other input that is written in the advanced logic to send the request to activate this feature.
2. Drive the vehicle and ensure that the programmed range limiting is working.

Note: This feature uses body controller-based software controls which can be diagnosed with the International® Diamond Logic® Builder and SDS software.

References:
Refer to the applicable International® Circuit Diagrams and Service Manuals.

35. Eaton® Transmissions Integration Features

Refer to the Eaton® manuals for information on integrating Eaton® Transmissions.

Refer to the TRIG2600 Eaton Cummins Automated Transmission Technologies - PTO Installation Guide

35.1. Eaton® Ultrashift™ Transmission PTO Feedback

Feature Applicability to Vehicle Platforms:

- Line (LT)
- Regional Haul (RH)
- Heavy Vocational (HV)
- Heavy Extreme (HX) 2021 and Newer

Extended Description: Eaton® Ultrashift™ transmissions require a PTO feedback input to optimize PTO operations.

7502 Is the feedback connector for the Ultrashift™ transmission.

System Block Diagram:



Parts Associated with This Feature:

PART NUMBER	DESCRIPTION
7105 Ultrashift™ TCM CONNECTOR	
3599542C1	ECU CONNECTOR 38 WAY
3555249C1	20-GAUGE TERMINAL
HARNESS 2-WAY CONNECTOR	
587567C91	2–WAY. FEMALE CONNECTOR BODY
3555249C1	20-GAUGE TERMINAL
589391C1	PLUG SEALANT
MATING 2–WAY CONNECTOR	
587568C91	2–WAY MALE CONNECTOR BODY
587575C1	20-GAUGE TERMINAL
1652325C1/2607909C1	CAVITY PLUG

Parts Associated with This Feature

35.2. Eaton® Procision™ Transmission

13WEP: WIRING, TRANS, BODY BUILDER Installed Wiring and Connector for Transmission/PTO Controls, for Eaton® Procision™ Transmission.

Feature Applicability to Vehicle Platforms:

- Medium Vocational (MV) - **Removed from current production**

Extended Description: Preprogrammed control functions that are designed to meet customer needs are available as optional equipment on the Eaton® Procision™ transmission.

Body control module features are available to automate PTO control on the Procision™ transmission. All interaction is enabled over the datalink between the BCM and the TCM.

The body builder Input/Output connector will provide the appropriate wires needed if the body builder desires to use hard wired circuits to control the PTO.

This connector circuits provide PTO enable capability as required by the application.

System Block Diagram:

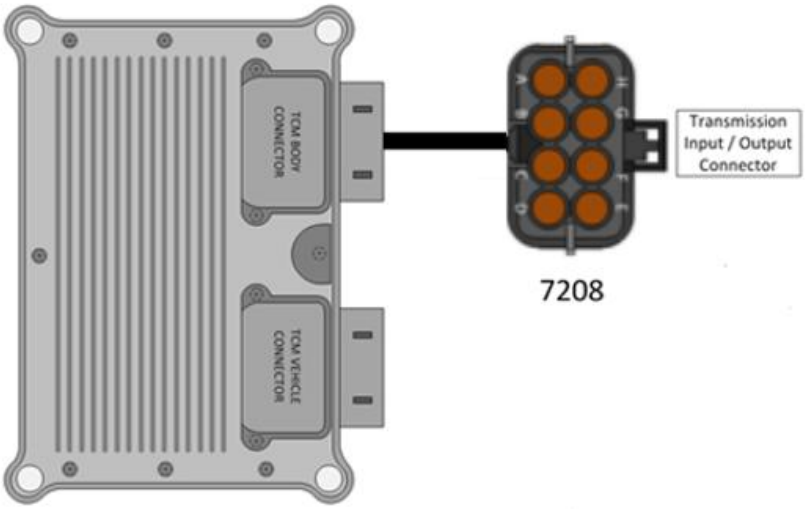

Pinout Functions

Connector Number 7208				
Cavity	Circuit Number	I/O	Function	Maximum Current
A	K92#102	Output	PTO Engage Output	
C	K92#114	Input	PTO Request Return	
D	K92#115	Input	PTO Request Input	
E	K92#116	Input	PTO Confirmation Status	

Parts Associated with This Feature:

PART NUMBER	DESCRIPTION
20-WAY TRANSMISSION CONTROL MODULE	
3765544C1	20-WAY TCM CONNECTOR BODY (7106)
	TCM CONNECTOR LOCK
3766445C1	WIRE TERMINAL 18-GAUGE
	CONNECTOR PLUG
8-WAY CONNECTOR 7208 (CHASSIS HARNESS)	
3525874C1	8-WAY CONNECTOR BODY
3525875C1	CONNECTOR LOCK
1667742C1	WIRE TERMINAL 18-GAUGE
1661872C1	WIRE TERMINAL SEAL 18-GAUGE

2025431C1	CONNECTOR CAVITY PLUG
8-WAY MATING CONNECTOR FOR 7208 (BODY BUILDER HARNESS)	
3525872C1	8-WAY CONNECTOR BODY
3525875C1	CONNECTOR LOCK
1661875C1	WIRE TERMINAL 18-GAUGE
1661872C1	WIRE TERMINAL SEAL 18-GAUGE
2025431C1	CONNECTOR CAVITY PLUG

Parts Associated with Feature

How to Test This Feature:
Review this entry carefully and choose the transmission and optional electrical interface feature that is right for the particular equipment application. Reference the Eaton® software tool and chassis model circuit diagram manual as a programming and diagnostic resource.

References:
Refer to the applicable International® Circuit Diagrams and Service Manuals.

Refer to the Eaton® PTO Information Guide TRIG2600 EN-US
Procision™ Dual-Clutch Automatic Transmission TRIG0990 EN-US

13WEW: WIRING, TRANSMISSION Installed Wiring and Connector for Transmission/PTO Controls, for Eaton® Endurant™ Transmission.

Feature Applicability to Vehicle Platforms:
- Line Haul (LT)
- Regional Haul (RH)
- Heavy Extreme (HX) 2021 and Newer

Extended Description: Preprogrammed control functions that are designed to meet customer needs are available as optional equipment on the Eaton® Endurant™ transmission.

Body control module features are available to automate PTO control on the Endurant™ transmission. All interaction is enabled over the datalink between the BCM and the TCM.

If hardwired control of the PTO or PTO feedback is desired, the body builder Input/Output connector will provide the appropriate hard-wired connections.

TCM programming is required to determine if PTO function will be controlled over the drive train data link or hard-wired circuits to the TCM.

Note: Auto Neutral requests to the Endurant TCM are accomplished with messages on the J1939 Data Link. Hard wired inputs are not provided.

Refer to the Endurant XD Series PTO Installation and Body Integration Guide

Refer to the Endurant Series I/O Calibration Package Installation and Wiring Guide

- **System Block Diagram:**

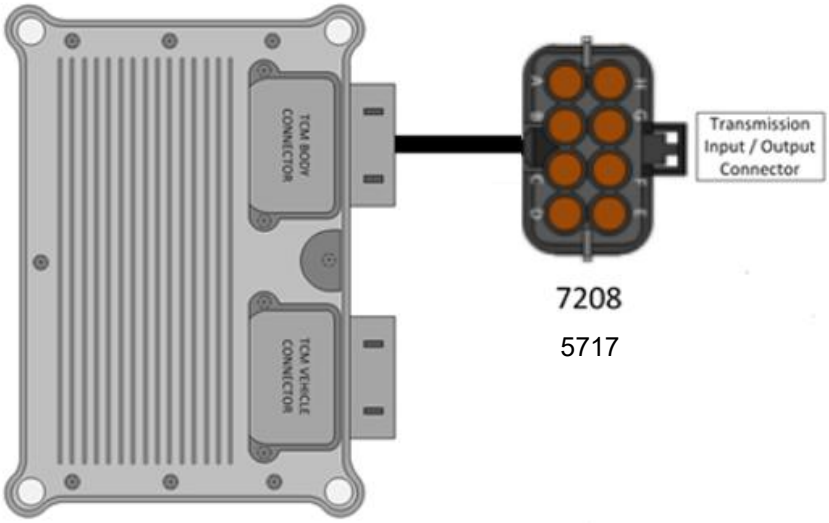

Pinout Functions

Note: The functions of each of these inputs and outputs is determine by the programing in the TCM**.**

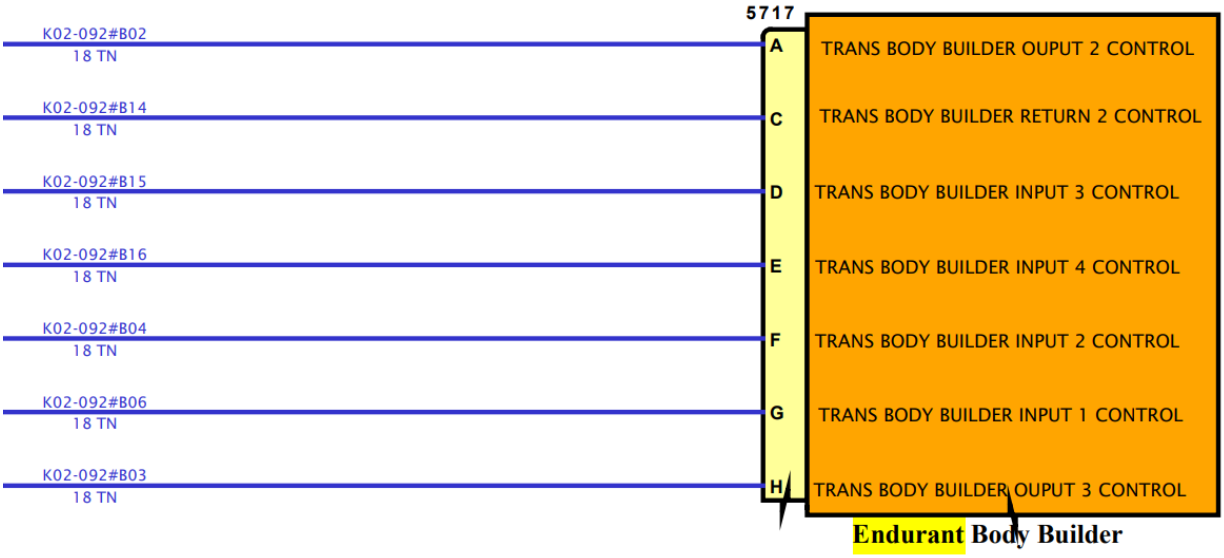

Connector Number 5717/7208				
Cavity	Circuit Number	I/O	Function	Maximum Current
A	KT92#202	Output	PTO Engage Output	
C	KT92#214	Input	PTO Request Return	
D	KT92#215	Input	PTO Request Input	
E	KT92#216	Output	PTO Confirmation Status	

Connector Location

The BB connector is between Fuel/Water Separator and dash panel and the bottom of the Fuel/Water Separator bracket.

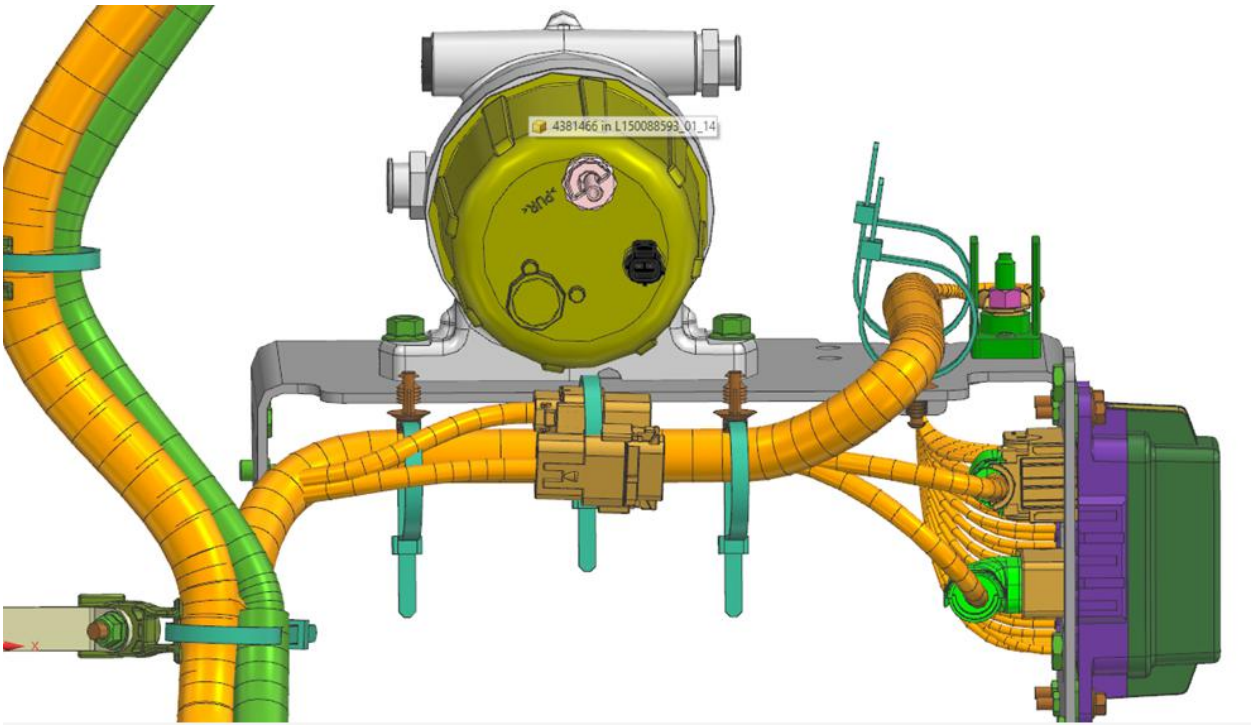

Parts Associated with This Feature:

PART NUMBER	DESCRIPTION
20-WAY TRANSMISSION CONTROL MODULE	
3765545C1	20-WAY TCM CONNECTOR BODY (7107)
	TCM CONNECTOR LOCK
3766445C1	WIRE TERMINAL 18-GAUGE
	CONNECTOR PLUG
8-WAY CONNECTOR 5717/7208 (CHASSIS HARNESS)	
3525874C1	8-WAY CONNECTOR BODY
3525875C1	CONNECTOR LOCK
1667742C1	WIRE TERMINAL 18-GAUGE
1661872C1	WIRE TERMINAL SEAL 18-GAUGE
2025431C1	CONNECTOR CAVITY PLUG
8-WAY MATING CONNECTOR FOR 5717/7208 (BODY BUILDER HARNESS)	
3525872C1	8-WAY CONNECTOR BODY
3525875C1	CONNECTOR LOCK
1661875C1	WIRE TERMINAL 18-GAUGE
1661872C1	WIRE TERMINAL SEAL 18-GAUGE
2025431C1	CONNECTOR CAVITY PLUG

Parts Associated with Feature

35.3. Eaton® Endurant™ Transmission Split-Shaft Feature Codes

Feature Applicability to Vehicle Platforms:

- Heavy Extreme (HX)

Extended Description: Preprogrammed control functions that are designed to meet customer needs are available to support Split-Shaft Operation with the Eaton® Endurant ™ transmission. This feature provides the customer with the ability to control the customer-supplied Split Shaft PTO with an in-dash switch and two air solenoids. This feature provides all the software and wiring to the air solenoids located inside the driver's side frame rail next to the transmission. Customers must supply and route air plumbing to the transfer case.

Engine speed control during split shaft operation requires specific programming and wiring onto the Engne ECM.

Programmable parameters in DLB and the Eaton software allow customers to customize the functionality of this feature.

System Block Diagram:

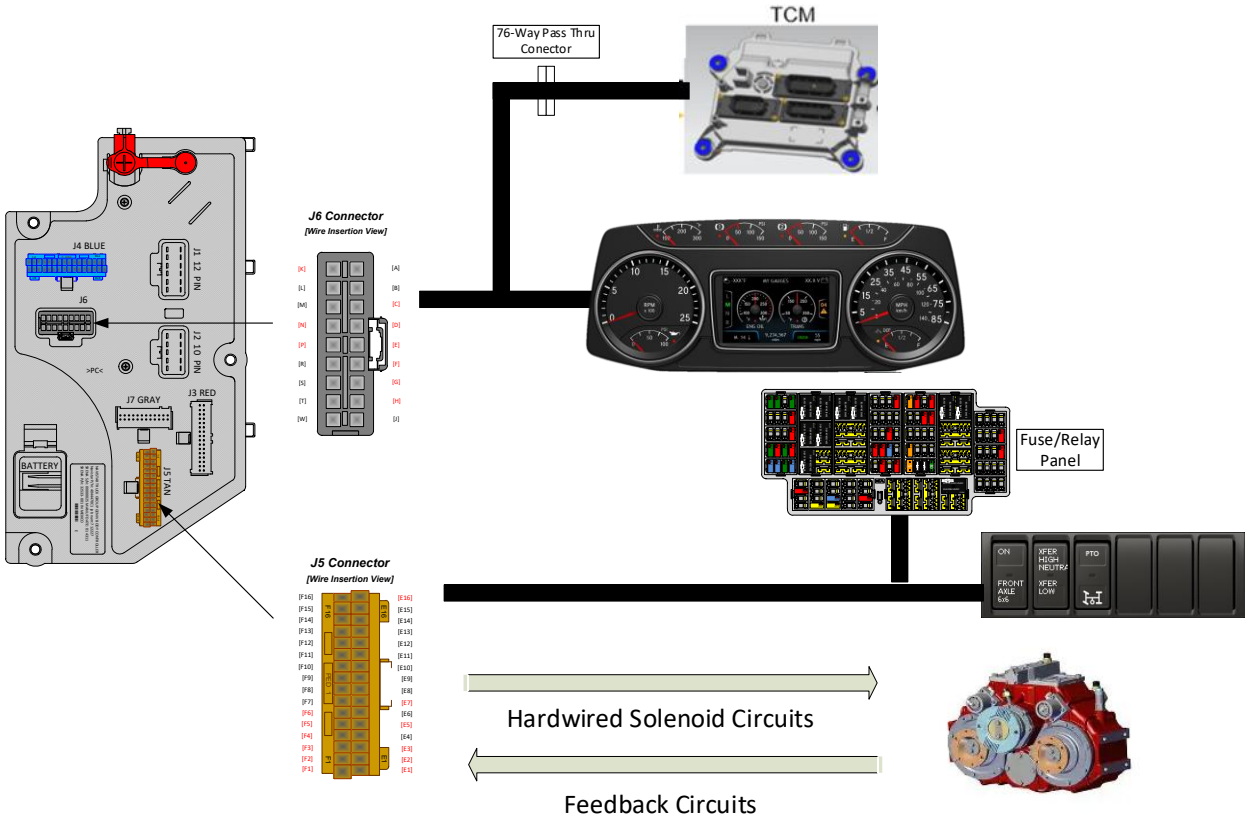

Split shaft Feature Codes in DLB:

0597678 BCM PROG, PTO SPLIT SHAFT for use with Endurant XD Transmission & A26 Engine

0597696 BCM PROG, PTO SPLIT SHAFT for use with Endurant XD Transmission & X15 Engine

How to Test This Feature:

Review this entry carefully and choose the transmission and optional electrical interface feature that is right for your equipment application. Reference the Eaton® software tool and chassis model circuit diagram manual as a programming and diagnostic resource.

References:

Refer to the applicable International® Circuit Diagrams and Service Manuals.

Refer to Endurant XD Series PTO Installation and Body Integration Guide TRIG2620 EN-US

35.4. 13WMJ ROCK-FREE OPERATIONAL MODE Eaton® Endurant™ Rock-Free Feature Code

Feature Applicability to Vehicle Platforms:

- Heavy Extreme (HX)

Extended Description: 13WMJ ROCK-FREE OPERATIONAL MODE Allows Driver to Control the Clutch Torque Directly by Applying and Releasing the Accelerator Pedal to Rock the Vehicle Free from a Stuck Condition, Includes Monostable 2 Position Switch Used to Select Between Rock-Free Mode Active and Rock-Free Mode Inactive NOTE: Rock-Free Operational Mode code requires 13GKC, 13GKD or 13GKE.

It is designed to help heavy-duty trucks get unstuck from soft terrain such as **mud, snow, or sand** without damaging the drivetrain.

Programmable parameters in DLB and the Eaton software allow customers to customize the functionality of this feature.

System Block Diagram:

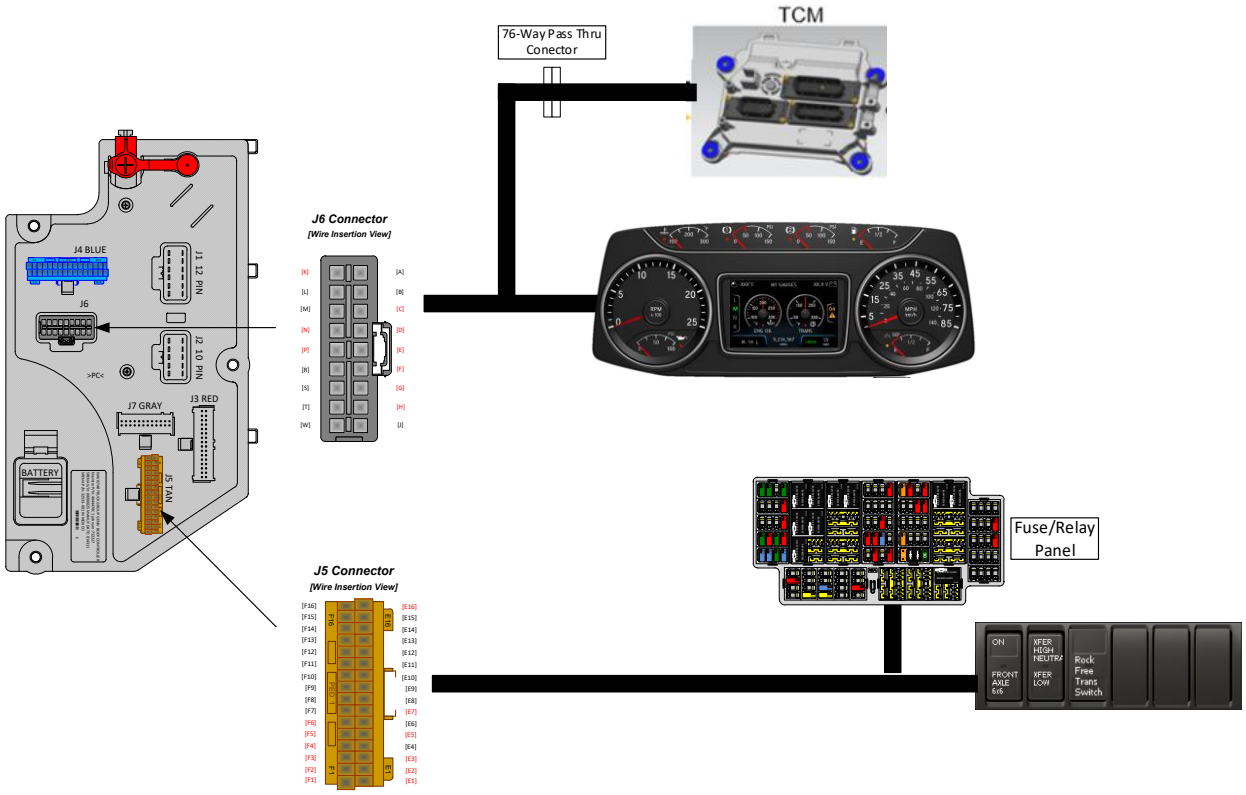

Rock-Free Feature Codes in DLB:

0597622 BCM PROG, ROCK-FREE OPR MODE

Parts Associated with This Feature:

PART NUMBER	DESCRIPTION
4299527C1	Switch , Mux, Rock Free Mode

How to Test This Feature:

Review this entry carefully and choose the transmission and optional electrical interface feature that is right for your equipment application. Reference the Eaton® software tool and chassis model circuit diagram manual as a programming and diagnostic resource.

References:

Refer to the applicable International® Circuit Diagrams and Service Manuals.

Refer to Endurant XD Series PTO Installation and Body Integration Guide TRIG2620 EN-US

Refer to Endurant Series I/O Calibration Package Installation and Wiring Guide

36. Allison 1000 and 2000 Transmission Spare Input/Output (I/O) and Sales Codes

Refer to the Allison manuals for information on integrating Allison Transmissions

36.1. 13WDH Description: WIRING, TRANS BODY BUILDER Installed Wiring for Transmission/PTO Controls, for Allison 2000, 2100, 2200, 2400, 2500 Series Transmission Only

Feature Applicability to Vehicle Platforms:

- Heavy Vocational (HV)
- Medium Vocational (MV)

Extended Description: Preprogrammed control functions that are designed to meet customer needs are available as optional equipment on Allison transmissions. The body builder Input/Output connectors will provide the appropriate wires needed for the vehicle to interface with the transmission. These connectors provide vehicle speed, sump/retarder temperature, PTO enable capability, range indicator, retarder indicator and various other inputs as required by application.

System Block Diagram:

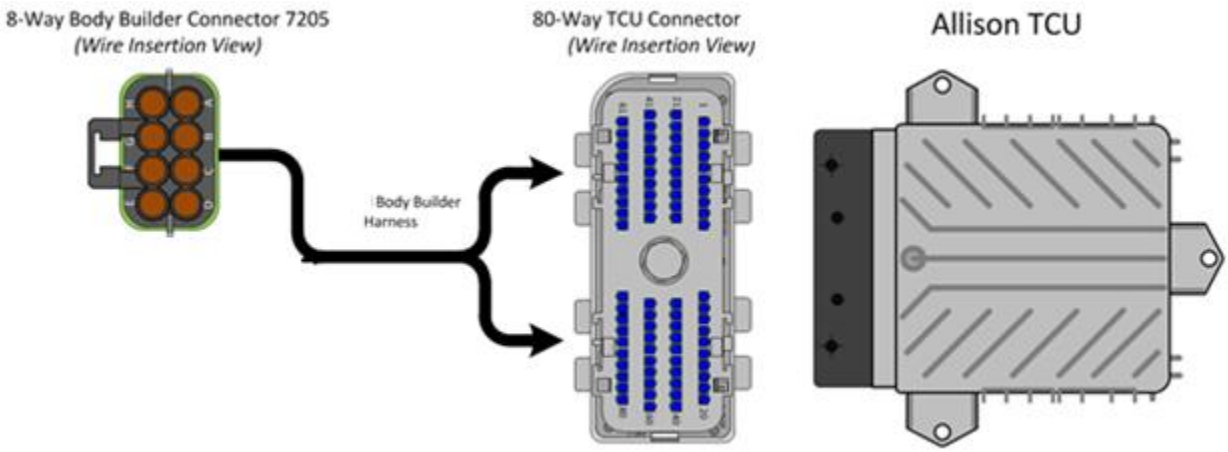

Pinout Functions

CAUTION - A TCM that is powered by 24 volts will provide 24 volts on the PTO enable output.

Connector Number 7205				
Cavity	Circuit Number	I/O	Function	Maximum Current
A	92B103		Signal Return	
B	92#143	Input	PTO Enable Input	
C	92#150	Output	PTO Enable Output	
D				
E	92#101	Input	Aux Function Range Inhibit	
F	92#123		Auto Neutral	
G	92#145	Output	Range Indicator Neutral	
H	92#105	Input	Output Speed Indicator	

Parts Associated with This Feature:

PART NUMBER	DESCRIPTION
TRANSMISSION CONTROL MODULE	
3605713C1	80-WAY TCM CONNECTOR BODY (7500)
3606525C1	TCM CONNECTOR LOCK
3686945C1	WIRE TERMINAL 18-GAUGE
3606525C1	CONNECTOR PLUG
8-WAY CONNECTOR 7205 (CHASSIS HARNESS)	
3525872C1	8-WAY CONNECTOR BODY
3525873C1	CONNECTOR LOCK
1661875C1	WIRE TERMINAL 18-GAUGE
1661872C1	WIRE TERMINAL SEAL 18-GAUGE
2025431C1	CONNECTOR CAVITY PLUG
8-WAY MATING CONNECTOR FOR 7205 (BODY BUILDER HARNESS)	
3525874C1	8-WAY CONNECTOR BODY
3525873C1	CONNECTOR LOCK
1667742C1	WIRE TERMINAL 18-GAUGE
1661872C1	WIRE TERMINAL SEAL 18-GAUGE
2025431C1	CONNECTOR CAVITY PLUG

Parts Numbers Associated with Feature

How to Test This Feature:
1. Depress the In-cab PTO switch to the ON position.
2. Verify that all enabled interlock conditions are met per programmed parameters using Diamond Logic Builder software.
3. Verify that the International-provided air solenoid is supplying air pressure at the solenoid output utilizing Diamond Logic Builder software.

References:
Refer to the applicable International® Circuit Diagrams and Service Manuals.

Refer to the Allison Vocational Model Guide:

36.2. 13XAC: ALLISON SPARE INPUT/OUTPUT for Rugged Duty Series (RDS), General Purpose Trucks, Package Number 354, Modified for Single Input Auto Neutral.

Feature Applicability to Vehicle Platforms:

- Medium Vocational (MV)

Extended Description: 13XAC is for Allison 1000/2000 series transmissions. This feature enables the single input Auto Neutral feature in the transmission control system. This feature requires either feature 13WEH or 13WUA to be included in the vehicle configuration. For operation of the auto neutral feature, please refer to 13WEH or 13WUA.

System Block Diagram:

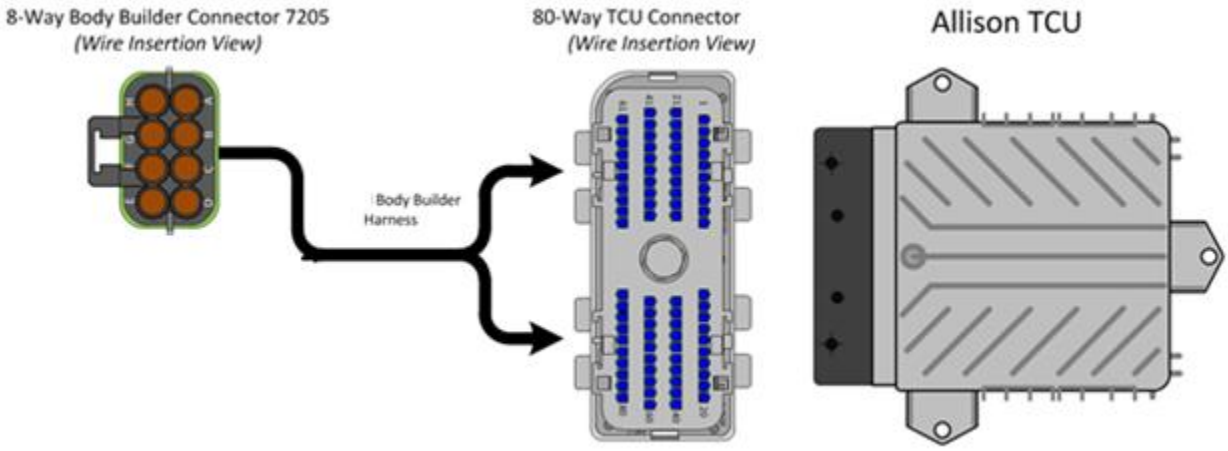

Pinout Functions

Connector Number 7205				
Cavity	Circuit Number	I/O	Function	Maximum Current
A	92B103		Signal Return	
B	92#143	Input	PTO Enable Input	
C	92#150	Output	PTO Enable Output	
D				
E	92#101	Input	Aux Function Range Inhibit	
F	92#123		Auto Neutral	
G	92#145	Output	Range Indicator Neutral	

Parts Associated with This Feature:

PART NUMBER	DESCRIPTION
TRANSMISSION CONTROL MODULE	
3605713C1	80-WAY TCM CONNECTOR BODY (7500)
3606525C1	TCM CONNECTOR LOCK
3686945C1	WIRE TERMINAL 18-GAUGE
3606525C1	CONNECTOR PLUG
8-WAY CONNECTOR 7205 (CHASSIS HARNESS)	
3525872C1	8-WAY CONNECTOR BODY
3525873C1	CONNECTOR LOCK
1661875C1	WIRE TERMINAL 18-GAUGE
1661872C1	WIRE TERMINAL SEAL 18-GAUGE
2025431C1	CONNECTOR CAVITY PLUG
8-WAY MATING CONNECTOR FOR 7205 (BODY BUILDER HARNESS)	
3525874C1	8-WAY CONNECTOR BODY
3525873C1	CONNECTOR LOCK
1667742C1	WIRE TERMINAL 18-GAUGE
1661872C1	WIRE TERMINAL SEAL 18-GAUGE
2025431C1	CONNECTOR CAVITY PLUG

Parts Numbers Associated with Feature

How to Test This Feature:

1. Depress the In-cab PTO switch to the ON position.
2. Verify that all enabled interlock conditions are met per programmed parameters using Diamond Logic Builder software.
3. Verify that the International-provided air solenoid is supplying air pressure at the solenoid output utilizing Diamond Logic Builder software.

References:

Refer to the applicable International® Circuit Diagrams and Service Manuals.

Refer to the Allison Vocational Model Guide:

37. Allison 3000 and 4000 Transmission Auto Neutral

Refer to the Allison manuals for information on integrating Allison Transmissions

Connectors are located in the engine compartment, on the drivers' side.

37.1. 13AAZ: AUTOMATIC NEUTRAL Allison 3000 & 4000 Series Transmission Shifts to Neutral When Parking Brake is Engaged.

Feature Applicability to Vehicle Platforms:

- Heavy Vocational (HV)
- Medium Vocational (MV)
- Heavy Extreme (HX) 2021 and Newer

Extended Description: 13AAZ is available for applications, primarily refuse, that require the transmission to shift to neutral, any time the park brake is engaged, and return to gear when the park brake is released.

System Block Diagram:

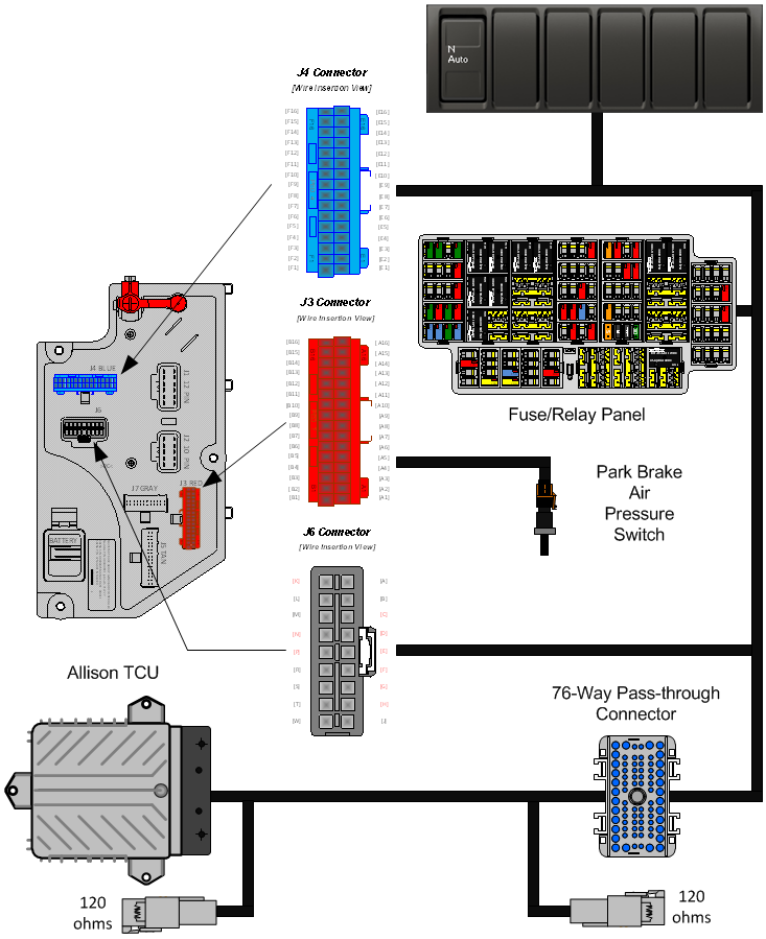

Body Controller Software Feature Codes:

- 597188 - BCM PROG, **AUTO NEUTRAL with On/Off Switch, Confirmation Indicator in Switch Pack**

Note/s About Possible Software Feature Conflicts:

- 597189 - BCM PROG, **AUTO NEUTRAL without On/Off Switch, Confirmation Indicator in Switch Pack**

How to Test This Feature:
Review this entry carefully and choose the transmission and optional electrical interface feature that is right for the particular vocational application. Reference Allison's software tool and chassis model circuit diagram manual as a programming and diagnostic resource

Note: This feature uses body controller-based software controls which can be diagnosed with The International® Diamond Logic® Builder software (see local dealer if not owned).

References:
Refer to the applicable International® Circuit Diagrams and Service Manuals.

Refer to the Allison Vocational Model Guide:

37.2. 13WEH: AUTOMATIC NEUTRAL Allison WT Transmission Shifts to Neutral When Parking Brake is Engaged and Remains in Neutral When Parking Brake is Disengaged, without On/Off Switch.

Feature Applicability to Vehicle Platforms:

- Heavy Vocational (HV)
- Medium Vocational (MV)
- Heavy Extreme (HX) 2021 and Newer

Extended Description: 13WEH is available for applications other than refuse that require the transmission to shift to neutral any time the park brake is engaged. The transmission will remain in neutral when the park brake is disengaged requiring the operator to shift the transmission into a forward or reverse gear. Feature 13WEH does NOT include a switch in the center panel to allow the operator to enable/disable auto neutral functionality.

System Block Diagram:

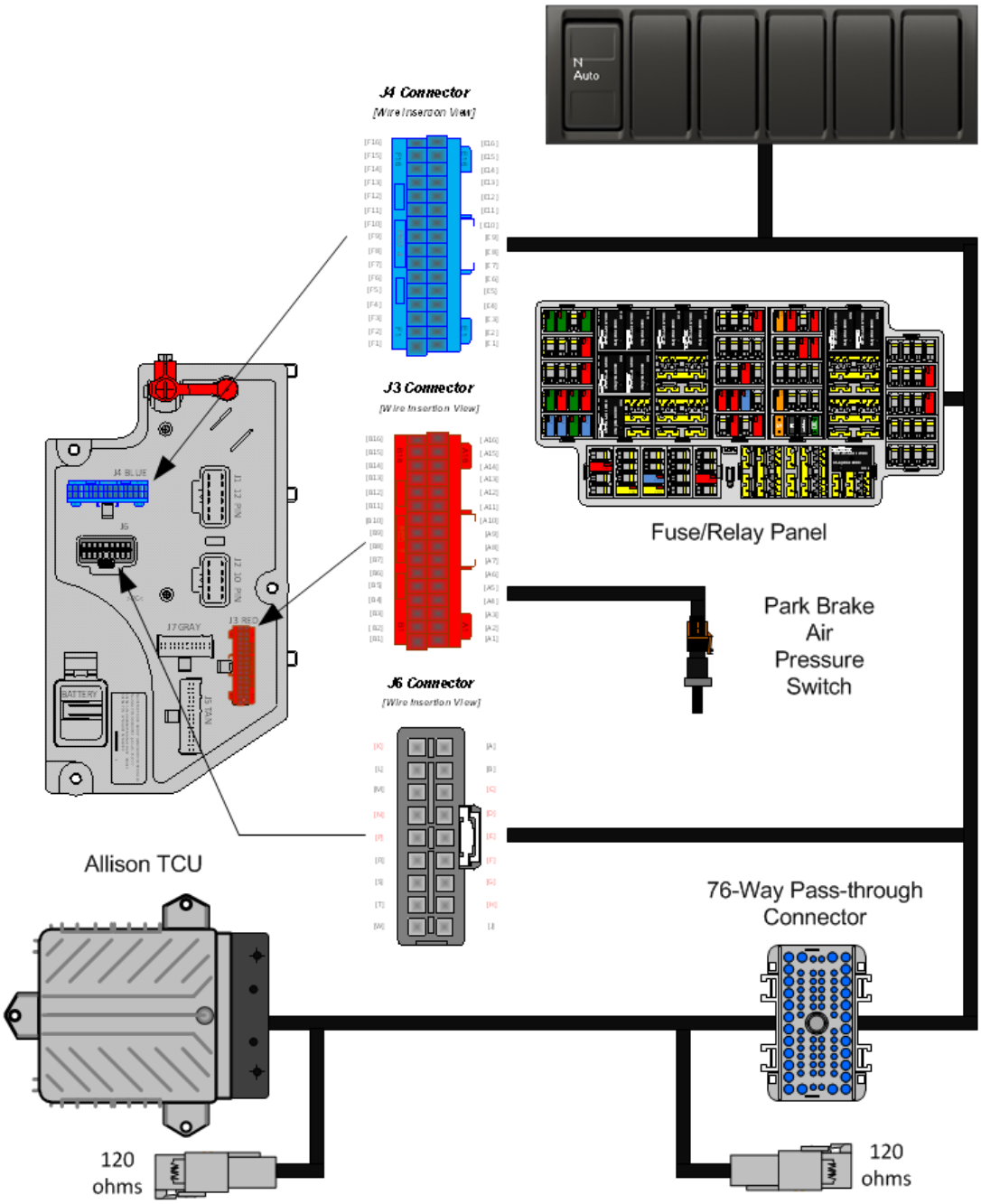

Body Controller Software Feature Codes:

- 597189 - BCM PROG, **AUTO NEUTRAL without On/Off Switch, Confirmation Indicator in Switch Pack**

Note/s About Possible Software Feature Conflicts:

- 597188 - BCM PROG, **AUTO NEUTRAL with On/Off Switch, Confirmation Indicator in Switch Pack**

How to Test This Feature:
Review this entry carefully and choose the transmission and optional electrical interface feature that is right for the particular vocational application. Reference Allison's software tool and chassis model circuit diagram manual as a programming and diagnostic resource

Note: This feature uses body controller-based software controls which can be diagnosed with The International® Diamond Logic® Builder software (see local dealer if not owned).

References:
Refer to the applicable International® Circuit Diagrams and Service Manuals.

Refer to the Allison Vocational Model Guide:

37.3. 13WUA: ALLISON NEUTRAL Allison WT Transmission Shifts to Neutral When Parking Brake is Engaged and Remains on Neutral When Park Brake is Disengaged.

Feature Applicability to Vehicle Platforms:

- Heavy Vocational (HV)
- Medium Vocational (MV)
- Regional Haul (RH)
- Heavy Extreme (HX) 2021 and Newer

Extended Description: 13WUA is available for applications other than refuse that require the transmission to shift to neutral any time the park brake is engaged. The transmission will remain in neutral when the park brake is disengaged requiring the operator to shift the transmission into a forward or reverse gear.

System Block Diagram:

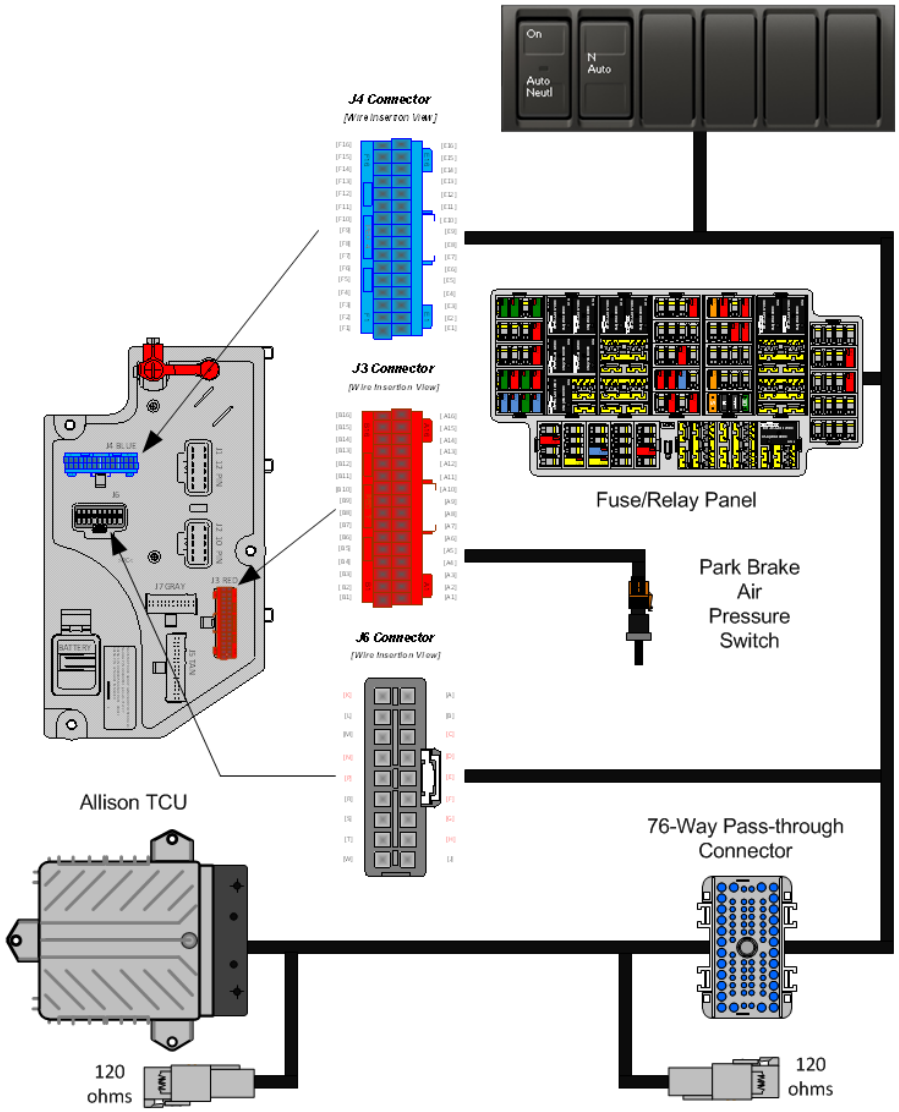

Body Controller Software Feature Codes:

- 597188 - BCM PROG, **AUTO NEUTRAL with On/Off Switch, Confirmation Indicator in Switch Pack**

Note/s About Possible Software Feature Conflicts:
597189

How to Test This Feature:
Review this entry carefully and choose the transmission and optional electrical interface feature that is right for the particular vocational application. Reference Allison's software tool and chassis model circuit diagram manual as a programming and diagnostic resource.

Note: This feature uses body controller-based software controls which can be diagnosed with The International® Diamond Logic® Builder software (see local dealer if not owned).

References:
Refer to the applicable International® Circuit Diagrams and Service Manuals.

Refer to the Allison Vocational Model Guide:

38. Allison 3000 and 4000 Transmission Spare Input/Output (I/O) and Sales Codes

Refer to the Allison manuals for information on integrating Allison Transmissions

Connector locations in engine compartment, drivers' side

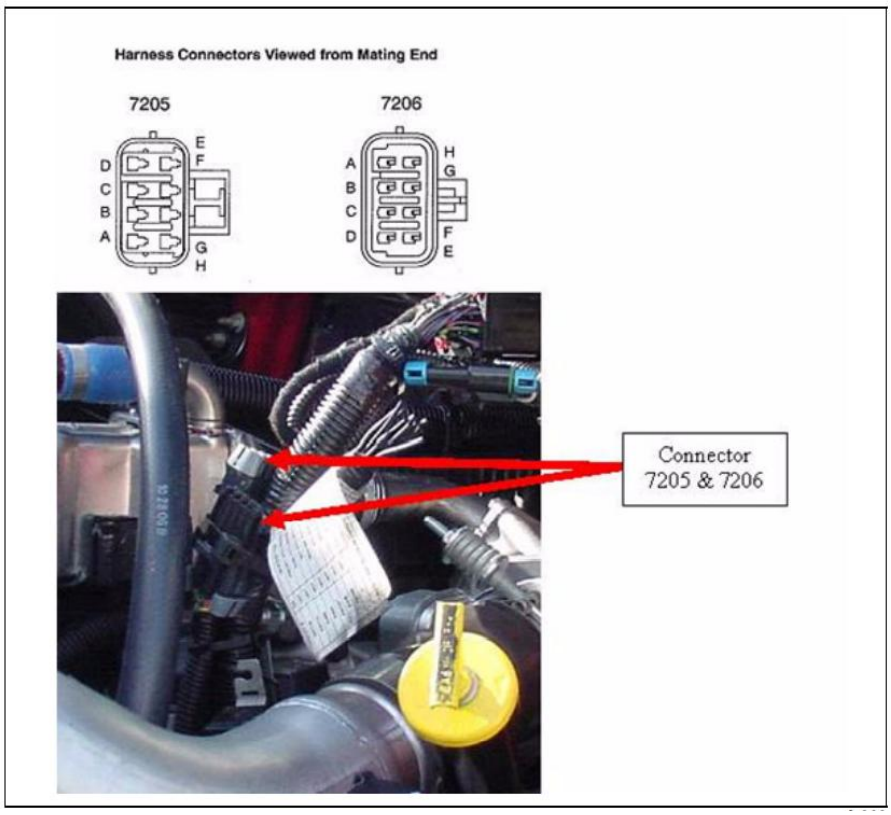

SPARE INPUT/OUTPUT CHART (FOR ALLISON TRANSMISSIONS)

Spare Input/Output Package Content		Code	13WUB	13WUC	13WUD	13WUE	13WUH	13WUJ	13WUN
		Package	223	223	170	198	150	142	226
		Other Requirements	Highway Series (HS) & Regional Haul Series (RHS); General Purpose Trucks	Rugged Duty Series (RDS) & Regional Haul Series (RHS); General Purpose Trucks, Construction	Emergency Vehicle Series (EVS)		Rugged Duty Series (RDS); Airport Refueler, Sewer Evac	Rugged Duty Series (RDS); Front/Rear Loaders, Recycling/Packer Trucks	Motorhome Series
					Rescue, Ambulance	Fire/ Pumper, Tank, Aerial/Ladder			
Func. #	**Function Name**		**Wire Number** (for Body Builder Use)						
Feature input functions that are enabled when vehicle is shipped									
I-A	Secondary Mode Input		M	M	M	M	M	M	M
I-C	PTO Enable Input		–	143	143	142	–	143	–
I-G	Auxiliary Hold		142	142	–	–	–	–	142
I-H	Engine brake enable & Preselect Request (Standard)		102/157	102/157	102/157	102/157	102/157	102/157	102/157
I-Y	Anti-Lock Brake Response		121	121	121	121	121	121	121
I-Z	Retarder Enable Input		161	161	161	161	161	161	161
I-AG	Automatic Neutral - Dual Input		–	–	–	–	–	117/142	–
I-AK	Auto-Neutral-Dual Input with Service Brake Status		–	–	117/142	–	–	–	–
Feature output functions that are enabled when vehicle is shipped									
O-B	Sump Retarder Temperature Indicator		164	164	164	164	164	164	164
O-C	Range Indicator		145	145	113	–	145 (4th)	–	145
O-D	Output Speed Indicator A		105	105	105	105	105	105	105
O-I	Engine Overspeed Indicator			–	–	–	130	–	130
O-S	Neutral Indicator for PTO		–	–	145		–	–	–
Feature input functions available for aftermarket use									
I-D	Shift Selector Transition		–	–	101^N	–	–	101^N	–
I-E	Auxiliary Function Range Inhibit (STD)		101^N	101^N	–	–	101^N	–	101^N
I-J	Fire Truck Pump Mode		–	–	–	$122/123^N$	–	–	–
I-L	Automatic Neutral - Single Input		117^N	117^N	–	–	–	–	117^N
I-W	Direction Change Enable		122^N	122^N	–	–	117^N	–	122^N
I-AJ	4th Gear Lockup for Pump Mode		–	–	–	–	$122/123^N$	–	–

NOTES:

^{N} = Not Activated

M = Mode Button

Circuit 117 will be excluded when auto neutral features13WEH or 13WUA are also ordered.

Circuits 117 and 142 will be excluded when auto neutral feature 13AAZ is also ordered.

Spare Input/Output Package Content		CODE	13WUK	13WUL	13WUS	13WUT	13WUV	13WUZ
		Package	170	167	223	227	226	198
		Other Requirements	Side Loaders	Street Sweeper	Rugged Duty Series (RDS) & Regional Haul Series (RHS); General Purpose Trucks Modified for Single Input Auto Neutral	Emergency Vehicle Series (EVS) Fire (not for Split Shaft PTO)	Highway Series (HS) & Regional Haul Series (RHS) General Purpose Trucks Modified for Single Input Auto Neutral	Emergency Vehicle Series (EVS); Fire/Pumper, Tank, Aerial/Ladder
Func. #	**Function Name**		**Wire Number** (for Body Builder Use)					
Feature input functions that are enabled when vehicle is shipped								
I-A	Secondary Mode Input		M	142	M	M	M	M
I-C	PTO Enable Input		143	M	143	143	–	142
I-F	Auxiliary Function Range Inhibit (Standard)		–	–	–	101/142	–	–
I-G	Auxiliary Hold		–	–	142	–	142	–
I-H	Engine Brake Enable & Preselect Request (Standard)		102/157	102/157	102/157	102/157	102/157	102/157
I-L	Automatic Neutral – Single Input		–	117	117	–	117	–
I-Q	Two Speed Axle Enable		–	101	–	–	–	–
I-Y	Anti-Lock Brake Response		121	121	121	121	121	121
I-Z	Retarder Enable Input		161	161	161	161	161	161
I-AG	Automatic Neutral – Dual Input		–	–	–	–	–	–
I-AH	Kickdown		–	–	–	–	–	–
I-AK	Automatic-Neutral – Dual Input with Service Brake Status		117/142	–	–	–	–	–
Feature output functions that are enabled when vehicle is shipped								
O-B	Sump/Retarder Temperature Indicator		164	164	164	–	164	164
O-C	Range Indicator		113	113	145	–	145	145 (4th)
O-D	Output Speed Indicator A		105	105	105	105	105	105
O-S	Neutral Indicator for PTO		145	–	–	145	–	–
Feature input functions available for aftermarket use								
I-D	Shift Selector Transition		101^{N}	–	–	–	–	–
I-E	Auxiliary Function Range Inhibit (Standard)		–	–	101^{N}	–	101^{N}	–
I-L	Automatic Neutral - Single Input		–	117^{N}	–	–	–	–
I-V	Reverse Enable		–	143^{N}	–	–	–	–
I-W	Direction Change Enable		–	–	122^{N}	–	122^{N}	–

NOTES:

^{N} = Not Activated
M = Mode Button
Circuit 117 will be excluded when auto neutral features13WEH or 13WUA are also ordered.
Circuits 117 and 142 will be excluded when auto neutral feature 13AAZ is also ordered.

Spare Input/Output Package Content		CODE	13WVA	13WVB	13XAC
		Package	360	170	354
		Other Requirements	Emergency Vehicle Series (EVS) Fire/Pumper, Tank, Aerial/Ladder	Emergency Vehicle Series (EVS); Rescue, Ambulance	Rugged Duty Series (RDS) General Purpose Trucks Modified for Single Input Auto Neutral
Func. #	Function Name		Wire Number (for Body Builder Use)		
Feature input functions that are enabled when vehicle is shipped					
I-A	Secondary Mode Input		142	M	142
I-C	PTO Enable Input		143	143	143
I-F	Auxiliary Function Range Inhibit (Standard)		-	-	–
I-G	Auxiliary Hold		-	-	–
I-H	Engine Brake Enable & Preselect Request (Standard)		102	102/157	102
I-L	Automatic Neutral – Single Input		-	-	123
I-Q	Two Speed Axle Enable		-	-	–
I-Y	Anti-Lock Brake Response		121	121	121
I-Z	Retarder Enable Input		-	161	–
I-AA	Service Brake – Status Input		162	-	–
I-AG	Automatic Neutral – Dual Input		-	-	–
I-AH	Kickdown		-	-	162
I-AK	Automatic-Neutral – Dual Input with Service Brake Status		-	-	–
I-AR	Overdrive Disable		161	-	161
Feature output functions that are enabled when vehicle is shipped					
O-B	Sump/Retarder Temperature Indicator		164	164	164
O-C	Range Indicator		145 (3rd)	113	145
O-D	Output Speed Indicator A		105	105	165
O-S	Neutral Indicator for PTO		-	145	–
Feature input functions available for aftermarket use					
I-D	Shift Selector Transition		-	101*	–
I-E	Auxiliary Function Range Inhibit (Standard)		-	-	101
I-L	Automatic Neutral - Single Input		-	-	123
I-V	Reverse Enable		-	-	–
I-W	Direction Change Enable		-	-	–
I-AK	Auto-Neutral - Dual Input with Service Brake Status		-	117/142[N]	-
I-BQ	Pump Mode (3rd Lockup)		122/123[N]	-	-

NOTES:

[N] = Not Activated

M = Mode Button

Circuit 117 will be excluded when auto neutral features13WEH or 13WUA are also ordered.

Circuits 117 and 142 will be excluded when auto neutral feature 13AAZ is also ordered.

38.1. 13WUB: ALLISON SPARE INPUT/OUTPUT for Highway Series (HS); General Purpose Trucks. **Package number 223**

Feature Applicability to Vehicle Platforms:

- Heavy Vocational (HV)
- Medium Vocational (MV)
- Regional Haul (RH)

Extended Description: Preprogrammed control functions that are designed to meet customer needs are available as optional equipment on Allison transmissions. The body builder Input/Output connectors will provide the appropriate wires needed for the vehicle to interface with the transmission. These connectors provide vehicle speed, sump/retarder temperature, PTO enable capability, range indicator, retarder indicator and various other inputs as required by application. 13WUB provides Allison's 5th generation I/O package 223 and is for Highway Series (HS) vocations.

System Block Diagram:

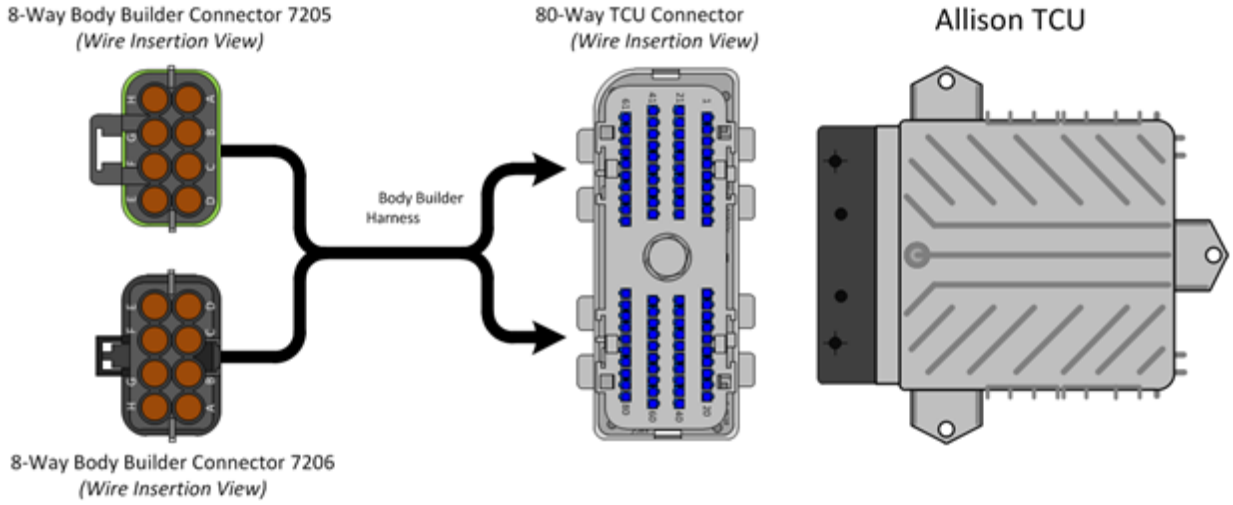

Pinout Functions

CAUTION - A TCM that is powered by 24 volts will provide 24 volts on the PTO enable output.

Connector Number 7205				
Cavity	Circuit Number	I/O	Function	Maximum Current
A	92B103		Signal Return	
B	92#113	Output		
C	92#104			
D	92#129			
E	92#122	Input	Direction Change Enable	
F	92#105	Output	Output Speed Indicator A	500 mAmp
G	92#164	Output	Sump / Retarder Temperature Indicator Output	500 mAmp
H	92#162	Input		

Connector Number 7206				
Cavity	Circuit Number	I/O	Function	Maximum Current
A	92#101	Input	Aux. Function Range Inhibit (Standard)	
B	92#117	Input	Automatic Neutral - Single Input	
C	92C103			
D	92#143			
E	92#142	Input	Auxiliary Hold	
F	92#145	Output	Range Indicator	500 mAmp
G	92#130			
H	92#123	Input	Neutral at Stop	

Parts Associated with This Feature:

PART NUMBER	DESCRIPTION
80-WAY TRANSMISSION CONTROL MODULE	
3605713C1	80-WAY TCM CONNECTOR BODY (7500)
3606525C1	TCM CONNECTOR LOCK
3686945C1	WIRE TERMINAL 18-GAUGE
3606525C1	CONNECTOR PLUG
8-WAY CONNECTOR 7205 (CHASSIS HARNESS)	
3525872C1	8-WAY CONNECTOR BODY

3525873C1	CONNECTOR LOCK
1661875C1	WIRE TERMINAL 18-GAUGE
1661872C1	WIRE TERMINAL SEAL 18-GAUGE
2025431C1	CONNECTOR CAVITY PLUG
8-WAY MATING CONNECTOR FOR 7205 (BODY BUILDER HARNESS)	
3525874C1	8-WAY CONNECTOR BODY
3525873C1	CONNECTOR LOCK
1667742C1	WIRE TERMINAL 18-GAUGE
1661872C1	WIRE TERMINAL SEAL 18-GAUGE
2025431C1	CONNECTOR CAVITY PLUG
8-WAY CONNECTOR 7206 (CHASSIS HARNESS)	
3525874C1	8-WAY CONNECTOR BODY
3525875C1	CONNECTOR LOCK
1667742C1	WIRE TERMINAL 18-GAUGE
1661872C1	WIRE TERMINAL SEAL 18-GAUGE
2025431C1	CONNECTOR CAVITY PLUG
8-WAY MATING CONNECTOR FOR 7206 (BODY BUILDER HARNESS)	
3525872C1	8-WAY CONNECTOR BODY
3525875C1	CONNECTOR LOCK
1661875C1	WIRE TERMINAL 18-GAUGE
1661872C1	WIRE TERMINAL SEAL 18-GAUGE
2025431C1	CONNECTOR CAVITY PLUG

Parts Associated with Feature

How to Test This Feature:
Review this entry carefully and choose the transmission and optional electrical interface feature that is right for the particular equipment application. Reference Allison's software tool and chassis model circuit diagram manual as a programming and diagnostic resource.

References:
Refer to the applicable International® Circuit Diagrams and Service Manuals.

Refer to the Allison Vocational Model Guide:

38.2. 13WUC: ALLISON SPARE INPUT/OUTPUT for Rugged Duty Series (RDS); General Purpose Trucks, Construction.

Feature Applicability to Vehicle Platforms:

- Heavy Vocational (HV)
- Heavy Extreme (HX) 2021 and Newer

Extended Description: Preprogrammed control functions that are designed to meet customer needs are available as optional equipment on Allison transmissions. The body builder Input/Output connectors will provide the appropriate wires needed for the vehicle to interface with the transmission. These connectors provide vehicle speed, sump/retarder temperature, PTO enable capability, range indicator, retarder indicator and various other inputs as required by application. 13WUC provides Allison's 5th generation I/O package 223 and is for Rugged Duty Series (RDS) vocations.

System Block Diagram:

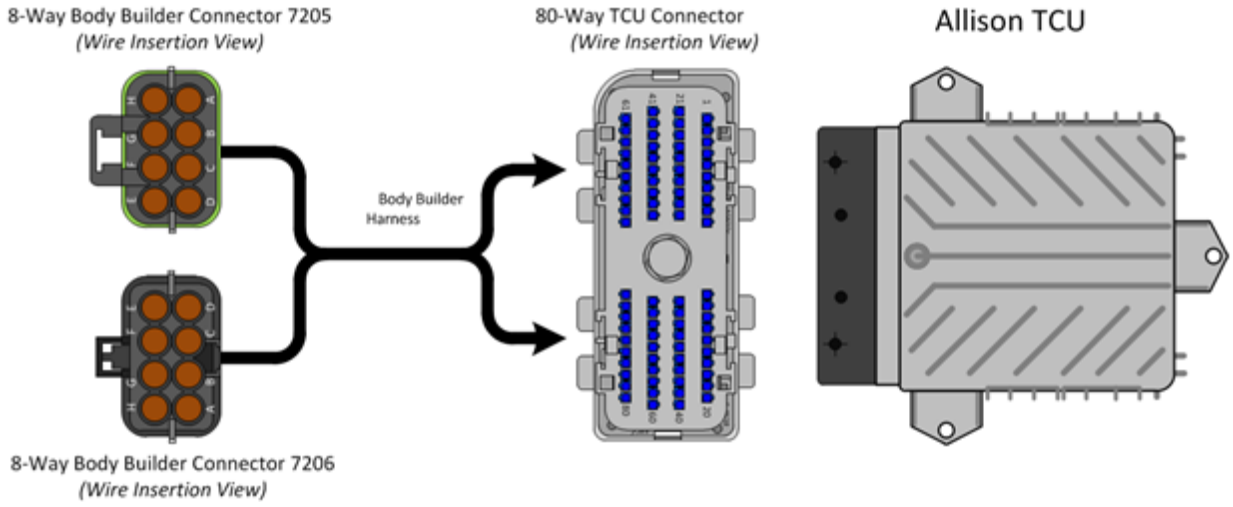

Pinout Functions

CAUTION - A TCM that is powered by 24 volts will provide 24 volts on the PTO enable output.

Connector Number 7205				
Cavity	Circuit Number	I/O	Function	Maximum Current
A	92B103		Signal Return	
B	92#113	Output		
C	92#104			
D	92#129			
E	92#122	Input	Direction Change Enable	
F	92#105	Output	Output Speed Indicator A	500 mAmp
G	92#164	Output	Sump / Retarder Temperature Indicator Output	500 mAmp
H	92#162	Input	Service Brake Status Input	

Connector Number 7206				
Cavity	Circuit Number	I/O	Function	Maximum Current
A	92#101	Input	Aux. Function Range Inhibit (Standard)	
B	92#117	Input	Automatic Neutral - Single Input	
C	92C103		Signal Return	
D	92#143	Input	PTO Enable Input	
E	92#142	Input	Auxiliary Hold	
F	92#145	Output	Range Indicator	500 mAmp
G	92#130		PTO Enable Output	500 mAmp
H	92#123	Input	Neutral at Stop	

Parts Associated with This Feature:

PART NUMBER	DESCRIPTION
80-WAY TRANSMISSION CONTROL MODULE	
3605713C1	80-WAY TCM CONNECTOR BODY (7500)
3606525C1	TCM CONNECTOR LOCK
3686945C1	WIRE TERMINAL 18-GAUGE
3606525C1	CONNECTOR PLUG

8-WAY CONNECTOR 7205 (CHASSIS HARNESS)	
3525872C1	8-WAY CONNECTOR BODY
3525873C1	CONNECTOR LOCK
1661875C1	WIRE TERMINAL 18-GAUGE
1661872C1	WIRE TERMINAL SEAL 18-GAUGE
2025431C1	CONNECTOR CAVITY PLUG
8-WAY MATING CONNECTOR FOR 7205 (BODY BUILDER HARNESS)	
3525874C1	8-WAY CONNECTOR BODY
3525873C1	CONNECTOR LOCK
1667742C1	WIRE TERMINAL 18-GAUGE
1661872C1	WIRE TERMINAL SEAL 18-GAUGE
2025431C1	CONNECTOR CAVITY PLUG
8-WAY CONNECTOR 7206 (CHASSIS HARNESS)	
3525874C1	8-WAY CONNECTOR BODY
3525875C1	CONNECTOR LOCK
1667742C1	WIRE TERMINAL 18-GAUGE
1661872C1	WIRE TERMINAL SEAL 18-GAUGE
2025431C1	CONNECTOR CAVITY PLUG
8-WAY MATING CONNECTOR FOR 7206 (BODY BUILDER HARNESS)	
3525872C1	8-WAY CONNECTOR BODY
3525875C1	CONNECTOR LOCK
1661875C1	WIRE TERMINAL 18-GAUGE
1661872C1	WIRE TERMINAL SEAL 18-GAUGE
2025431C1	CONNECTOR CAVITY PLUG

Parts Associated with Feature

How to Test This Feature:
Review this entry carefully and choose the transmission and optional electrical interface feature that is right for the particular equipment application. Reference Allison's software tool and chassis model circuit diagram manual as a programming and diagnostic resource.

References:
Refer to the applicable International® Circuit Diagrams and Service Manuals.

Refer to the Allison Vocational Model Guide:

38.3. 13WUD: ALLISON SPARE INPUT/OUTPUT for Emergency Vehicle Series (EVS); Rescue, Ambulance.

Feature Applicability to Vehicle Platforms:

- Heavy Vocational (HV)
- Medium Vocational (MV)
- Heavy Extreme (HX) 2021 and Newer

Extended Description: Preprogrammed control functions that are designed to meet customer needs are available as optional equipment on Allison transmissions. The body builder Input/Output connectors will provide the appropriate wires needed for the vehicle to interface with the transmission. These connectors provide vehicle speed, sump/retarder temperature, PTO enable capability, range indicator, retarder indicator and various other inputs as required by application. 13WUD provides Allison's 5th generation I/O package 170 and is for Emergency Vehicle Series (EVS) vocations.

System Block Diagram:

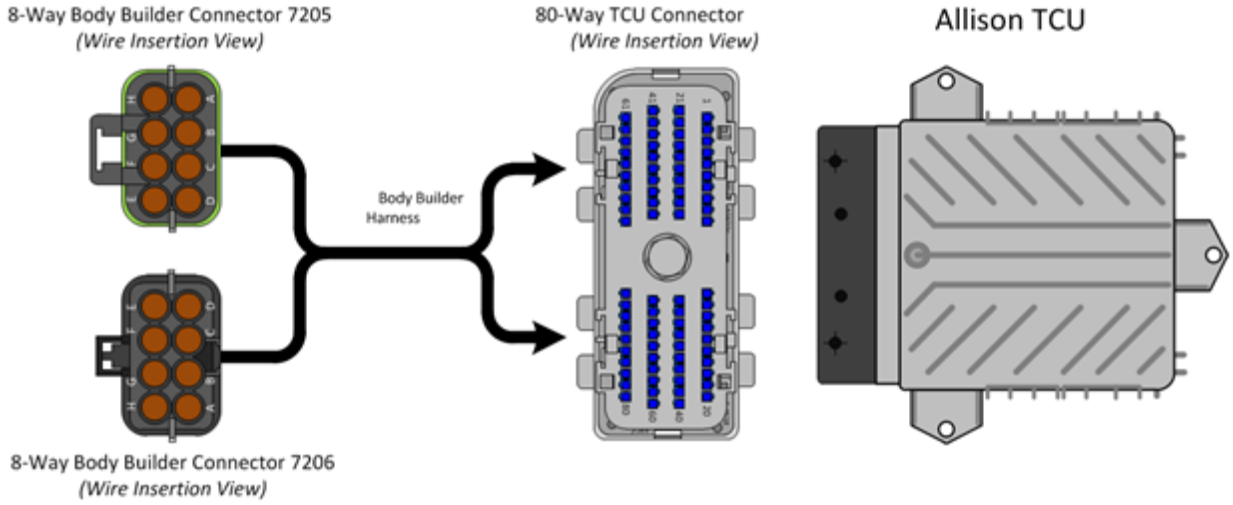

Pinout Functions

CAUTION - A TCM that is powered by 24 volts will provide 24 volts on the PTO enable output.

Connector Number 7205				
Cavity	Circuit Number	I/O	Function	Maximum Current
A	92B103		Signal Return	
B	92#113	Output		
C	92#104	Output		
D	92#129			
E	92#122	Input		
F	92#105	Output	Output Speed Indicator A	500 mAmps
G	92#164	Output	Sump / Retarder Temperature Indicator Output	500 mAmps
H	92#162	Input		

Connector Number 7206				
Cavity	Circuit Number	I/O	Function	Maximum Current
A	92#101	Input	Shift Selector Transition	
B	92#117	Input	Automatic Neutral - Dual Input with Service Brake Status	
C	92C103		Signal Return	
D	92#143	Input	PTO Enable Input	
E	92#142	Input	Automatic Neutral - Dual Input with Service Brake Status	
F	92#145	Output	Neutral indicator for PTO	500 mAmps
G	92#130			
H	92#123	Input		

Parts Associated with This Feature:

PART NUMBER	DESCRIPTION
80-WAY TRANSMISSION CONTROL MODULE	
3605713C1	80-WAY TCM CONNECTOR BODY (7500)
3606525C1	TCM CONNECTOR LOCK
3686945C1	WIRE TERMINAL 18-GAUGE

3606525C1	CONNECTOR PLUG
8-WAY CONNECTOR 7205 (CHASSIS HARNESS)	
3525872C1	8-WAY CONNECTOR BODY
3525873C1	CONNECTOR LOCK
1661875C1	WIRE TERMINAL 18-GAUGE
1661872C1	WIRE TERMINAL SEAL 18-GAUGE
2025431C1	CONNECTOR CAVITY PLUG
8-WAY MATING CONNECTOR FOR 7205 (BODY BUILDER HARNESS)	
3525874C1	8-WAY CONNECTOR BODY
3525873C1	CONNECTOR LOCK
1667742C1	WIRE TERMINAL 18-GAUGE
1661872C1	WIRE TERMINAL SEAL 18-GAUGE
2025431C1	CONNECTOR CAVITY PLUG
8-WAY CONNECTOR 7206 (CHASSIS HARNESS)	
3525874C1	8-WAY CONNECTOR BODY
3525875C1	CONNECTOR LOCK
1667742C1	WIRE TERMINAL 18-GAUGE
1661872C1	WIRE TERMINAL SEAL 18-GAUGE
2025431C1	CONNECTOR CAVITY PLUG
8-WAY MATING CONNECTOR FOR 7206 (BODY BUILDER HARNESS)	
3525872C1	8-WAY CONNECTOR BODY
3525875C1	CONNECTOR LOCK
1661875C1	WIRE TERMINAL 18-GAUGE
1661872C1	WIRE TERMINAL SEAL 18-GAUGE
2025431C1	CONNECTOR CAVITY PLUG

Parts Associated with Feature

How to Test This Feature:
Review this entry carefully and choose the transmission and optional electrical interface feature that is right for the particular equipment application. Reference Allison's software tool and chassis model circuit diagram manual as a programming and diagnostic resource.

References:
Refer to the applicable International® Circuit Diagrams and Service Manuals.

Refer to the Allison Vocational Model Guide:

38.4. 13WUE: ALLISON SPARE INPUT/OUTPUT for Emergency Vehicle Series (EVS); Fire/Pumper, Tank, Aerial/Ladder.

Feature Applicability to Vehicle Platforms:

- Heavy Vocational (HV)
- Medium Vocational (MV)
- Heavy Extreme (HX) 2021 and Newer

Extended Description: Preprogrammed control functions that are designed to meet customer needs are available as optional equipment on Allison transmissions. The body builder Input/Output connectors will provide the appropriate wires needed for the vehicle to interface with the transmission. These connectors provide vehicle speed, sump/retarder temperature, PTO enable capability, range indicator, retarder indicator and various other inputs as required by application. 13WUE provides Allison's 5th generation I/O package 198 and is for Emergency Vehicle Series (EVS) vocations.

System Block Diagram:

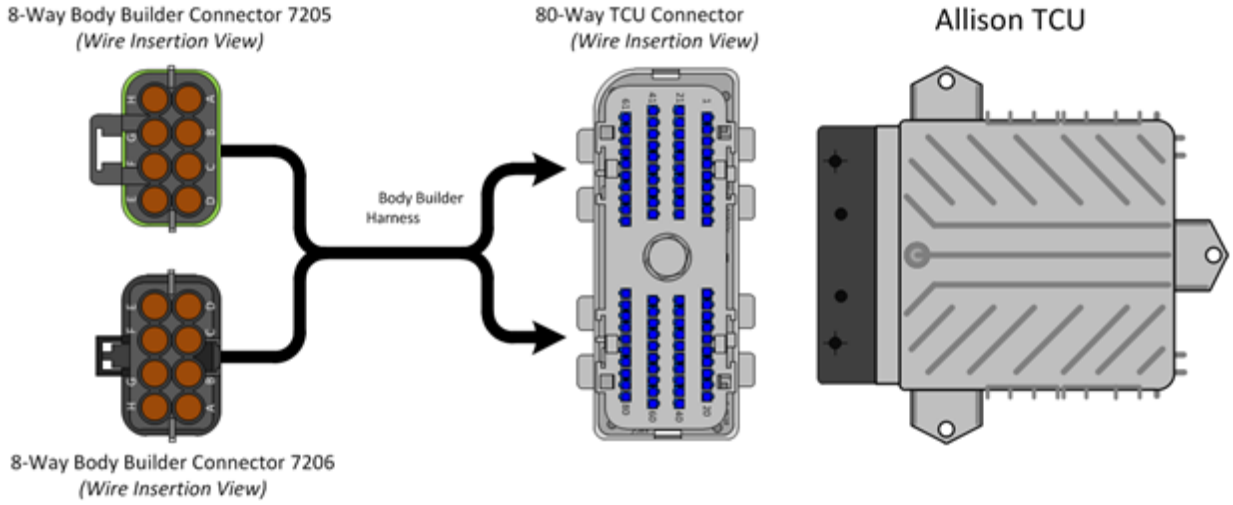

Pinout Functions

CAUTION - A TCM that is powered by 24 volts will provide 24 volts on the PTO enable output.

Connector Number 7205				
Cavity	Circuit Number	I/O	Function	Maximum Current
A	92B103		Signal Return	
B	92#113	Output	Neutral Indicator for PTO and PTO Request (NIPTO)	
C	92#104		Engine Brake Interface Output	
D	92#129			
E	92#122	Input	Fire Truck Pump Mode	
F	92#105	Output	Output Speed Indicator A	500 mAmps
G	92#164	Output	Sump / Retarder Temperature Indicator Output	500 mAmps
H	92#162	Input	Service Brake Status Input	

Connector Number 7206				
Cavity	Circuit Number	I/O	Function	Maximum Current
A	92#101	Input		
B	92#117	Input	Auto Neutral	
C	92C103			
D	92#143	Input		
E	92#142	Input	PTO Enable Input	
F	92#145	Output	Range Indicator	500 mAmps
G	92#130		PTO Drive Interface 1 Indicator	
H	92#123	Input	Fire Truck Pump Mode	

Parts Associated with This Feature:

PART NUMBER	DESCRIPTION
80-WAY TRANSMISSION CONTROL MODULE	
3605713C1	80-WAY TCM CONNECTOR BODY (7500)

3606525C1	TCM CONNECTOR LOCK
3686945C1	WIRE TERMINAL 18-GAUGE
3606525C1	CONNECTOR PLUG
8-WAY CONNECTOR 7205 (CHASSIS HARNESS)	
3525872C1	8-WAY CONNECTOR BODY
3525873C1	CONNECTOR LOCK
1661875C1	WIRE TERMINAL 18-GAUGE
1661872C1	WIRE TERMINAL SEAL 18-GAUGE
2025431C1	CONNECTOR CAVITY PLUG
8-WAY MATING CONNECTOR FOR 7205 (BODY BUILDER HARNESS)	
3525874C1	8-WAY CONNECTOR BODY
3525873C1	CONNECTOR LOCK
1667742C1	WIRE TERMINAL 18-GAUGE
1661872C1	WIRE TERMINAL SEAL 18-GAUGE
2025431C1	CONNECTOR CAVITY PLUG
8-WAY CONNECTOR 7206 (CHASSIS HARNESS)	
3525874C1	8-WAY CONNECTOR BODY
3525875C1	CONNECTOR LOCK
1667742C1	WIRE TERMINAL 18-GAUGE
1661872C1	WIRE TERMINAL SEAL 18-GAUGE
2025431C1	CONNECTOR CAVITY PLUG
8-WAY MATING CONNECTOR FOR 7206 (BODY BUILDER HARNESS)	
3525872C1	8-WAY CONNECTOR BODY
3525875C1	CONNECTOR LOCK
1661875C1	WIRE TERMINAL 18-GAUGE
1661872C1	WIRE TERMINAL SEAL 18-GAUGE
2025431C1	CONNECTOR CAVITY PLUG

Parts Associated with Feature

How to Test This Feature:
Review this entry carefully and choose the transmission and optional electrical interface feature that is right for the particular equipment application. Reference Allison's software tool and chassis model circuit diagram manual as a programming and diagnostic resource.

References:
Refer to the applicable International® Circuit Diagrams and Service Manuals.

Refer to the Allison Vocational Model Guide:

38.5. 13WUH: ALLISON SPARE INPUT/OUTPUT for Rugged Duty Series (RDS); Airport Refueler, Sewer Evac.

Feature Applicability to Vehicle Platforms:

- Heavy Vocational (HV)
- Medium Vocational (MV)
- Heavy Extreme (HX) 2021 and Newer

Extended Description: Preprogrammed control functions that are designed to meet customer needs are available as optional equipment on Allison transmissions. The body builder Input/Output connectors will provide the appropriate wires needed for the vehicle to interface with the transmission. These connectors provide vehicle speed, sump/retarder temperature, PTO enable capability, range indicator, retarder indicator and various other inputs as required by application. 13WUH provides Allison's 5th generation I/O package 150 and is for the Rugged Duty Series (RDS) vocations Airport Refueler and Sewer Evacuation.

System Block Diagram:

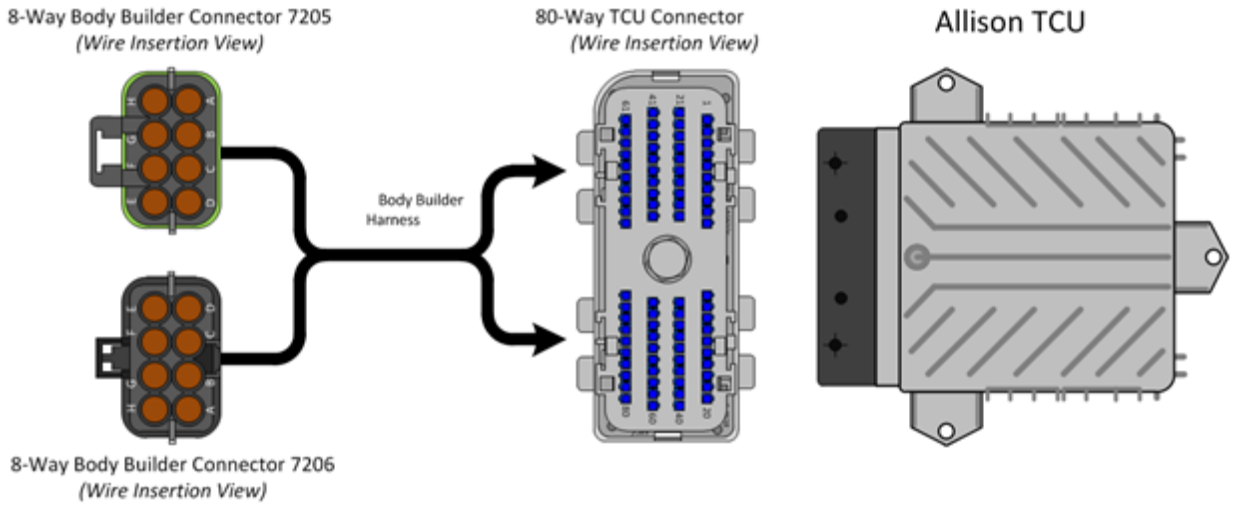

Pinout Functions

CAUTION - A TCM that is powered by 24 volts will provide 24 volts on the PTO enable output.

Connector Number 7205				
Cavity	Circuit Number	I/O	Function	Maximum Current
A	92B103		Signal Return	
B	92#113			
C	92#104			
D	92#129			
E	92#122	Input	4th Gear Lockup for Pump Mode	
F	92#105	Output	Output Speed Indicator A	500 mAmp
G	92#164	Output	Sump / Retarder Temperature Indicator Output	500 mAmp
H	92#162	Input		

Connector Number 7206				
Cavity	Circuit Number	I/O	Function	Maximum Current
A	92#101	Input	Aux. Function Range Inhibit (Standard)	
B	92#117	Input	Direction Change Enable	
C	92C103			
D	92#143		Neutral at Stop	
E				
F	92#145	Output	Range Indicator	500 mAmp
G	92#130		**Engine Overspeed Indicator**	500 mAmp
H	92#123	Input	4th Gear Lockup for Pump Mode	

Parts Associated with This Feature:

PART NUMBER	DESCRIPTION
80-WAY TRANSMISSION CONTROL MODULE	
3605713C1	80-WAY TCM CONNECTOR BODY (7500)
3606525C1	TCM CONNECTOR LOCK
3686945C1	WIRE TERMINAL 18-GAUGE
3606525C1	CONNECTOR PLUG

8-WAY CONNECTOR 7205 (CHASSIS HARNESS)	
3525872C1	8-WAY CONNECTOR BODY
3525873C1	CONNECTOR LOCK
1661875C1	WIRE TERMINAL 18-GAUGE
1661872C1	WIRE TERMINAL SEAL 18-GAUGE
2025431C1	CONNECTOR CAVITY PLUG
8-WAY MATING CONNECTOR FOR 7205 (BODY BUILDER HARNESS)	
3525874C1	8-WAY CONNECTOR BODY
3525873C1	CONNECTOR LOCK
1667742C1	WIRE TERMINAL 18-GAUGE
1661872C1	WIRE TERMINAL SEAL 18-GAUGE
2025431C1	CONNECTOR CAVITY PLUG
8-WAY CONNECTOR 7206 (CHASSIS HARNESS)	
3525874C1	8-WAY CONNECTOR BODY
3525875C1	CONNECTOR LOCK
1667742C1	WIRE TERMINAL 18-GAUGE
1661872C1	WIRE TERMINAL SEAL 18-GAUGE
2025431C1	CONNECTOR CAVITY PLUG
8-WAY MATING CONNECTOR FOR 7206 (BODY BUILDER HARNESS)	
3525872C1	8-WAY CONNECTOR BODY
3525875C1	CONNECTOR LOCK
1661875C1	WIRE TERMINAL 18-GAUGE
1661872C1	WIRE TERMINAL SEAL 18-GAUGE
2025431C1	CONNECTOR CAVITY PLUG

Parts Associated with Feature

How to Test This Feature:
Review this entry carefully and choose the transmission and optional electrical interface feature that is right for the particular equipment application. Reference Allison's software tool and chassis model circuit diagram manual as a programming and diagnostic resource.

References:
Refer to the applicable International® Circuit Diagrams and Service Manuals.

Refer to the Allison Vocational Model Guide:

38.6. 13WUJ: ALLISON SPARE INPUT/OUTPUT for Rugged Duty Series (RDS); Front Loaders, Rear Loaders, Recycling/Packer Trucks.

Feature Applicability to Vehicle Platforms:

- Heavy Vocational (HV)
- Medium Vocational (MV)
- Heavy Extreme (HX) 2021 and Newer

Extended Description: Preprogrammed control functions that are designed to meet customer needs are available as optional equipment on Allison transmissions. The body builder Input/Output connectors will provide the appropriate wires needed for the vehicle to interface with the transmission. These connectors provide vehicle speed, sump/retarder temperature, PTO enable capability, range indicator, retarder indicator and various other inputs as required by application. 13WUJ provides Allison's 5th generation I/O package 142 and is for the Rugged Duty Series (RDS) vocations Front Loaders, Rear Loaders, and Recycling Trucks.

System Block Diagram:

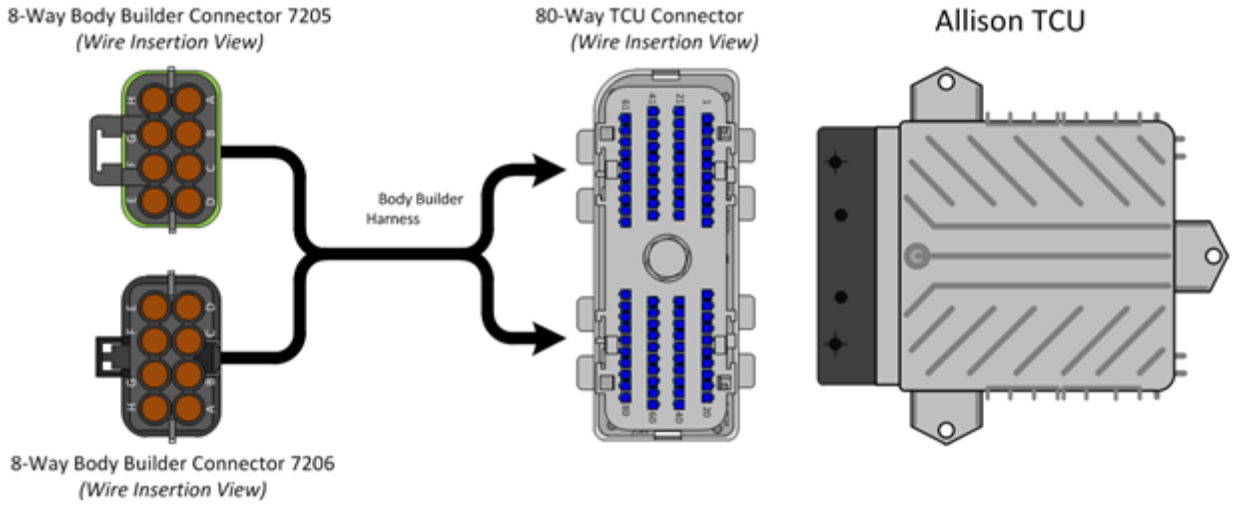

Pinout Functions

CAUTION - A TCM that is powered by 24 volts will provide 24 volts on the PTO enable output.

Connector Number 7205				
Cavity	Circuit Number	I/O	Function	Maximum Current
A	92B103		Signal Return	
B	92#113	Output		
C	92#104			
D	92#129			
E	92#122	Input		
F	92#105	Output	Output Speed Indicator A	500 mAmp
G	92#164	Output	Sump / Retarder Temperature Indicator Output	500 mAmp
H	92#162	Input		

Connector Number 7206				
Cavity	Circuit Number	I/O	Function	Maximum Current
A	92#101	Input	Shift Selector Transition	
B	92#117	Input	Automatic Neutral - Dual Input	
C	92C103			
D	92#143		PTO Enable Input	
E	92#142	Input	Automatic Neutral - Dual Input	
F	92#145	Output	Neutral Indicator for PTO	500 mAmp
G	92#130		PTO Enable Output	500 mAmp
H	92#123	Input	Neutral at Stop	

Parts Associated with This Feature:

PART NUMBER	DESCRIPTION
80-WAY TRANSMISSION CONTROL MODULE	
3605713C1	80-WAY TCM CONNECTOR BODY (7500)
3606525C1	TCM CONNECTOR LOCK
3686945C1	WIRE TERMINAL 18-GAUGE
3606525C1	CONNECTOR PLUG

8-WAY CONNECTOR 7205 (CHASSIS HARNESS)	
3525872C1	8-WAY CONNECTOR BODY
3525873C1	CONNECTOR LOCK
1661875C1	WIRE TERMINAL 18-GAUGE
1661872C1	WIRE TERMINAL SEAL 18-GAUGE
2025431C1	CONNECTOR CAVITY PLUG
8-WAY MATING CONNECTOR FOR 7205 (BODY BUILDER HARNESS)	
3525874C1	8-WAY CONNECTOR BODY
3525873C1	CONNECTOR LOCK
1667742C1	WIRE TERMINAL 18-GAUGE
1661872C1	WIRE TERMINAL SEAL 18-GAUGE
2025431C1	CONNECTOR CAVITY PLUG
8-WAY CONNECTOR 7206 (CHASSIS HARNESS)	
3525874C1	8-WAY CONNECTOR BODY
3525875C1	CONNECTOR LOCK
1667742C1	WIRE TERMINAL 18-GAUGE
1661872C1	WIRE TERMINAL SEAL 18-GAUGE
2025431C1	CONNECTOR CAVITY PLUG
8-WAY MATING CONNECTOR FOR 7206 (BODY BUILDER HARNESS)	
3525872C1	8-WAY CONNECTOR BODY
3525875C1	CONNECTOR LOCK
1661875C1	WIRE TERMINAL 18-GAUGE
1661872C1	WIRE TERMINAL SEAL 18-GAUGE
2025431C1	CONNECTOR CAVITY PLUG

Parts Associated with Feature

How to Test This Feature:
Review this entry carefully and choose the transmission and optional electrical interface feature that is right for the particular equipment application. Reference Allison's software tool and chassis model circuit diagram manual as a programming and diagnostic resource.

References:
Refer to the applicable International® Circuit Diagrams and Service Manuals.

Refer to the Allison Vocational Model Guide:

38.7. 13WUK: ALLISON SPARE INPUT/OUTPUT for Rugged Duty Series (RDS); Side Loaders.

Feature Applicability to Vehicle Platforms:

- Heavy Vocational (HV)
- Medium Vocational (MV)
- Heavy Extreme (HX) 2021 and Newer

Extended Description: Preprogrammed control functions that are designed to meet customer needs are available as optional equipment on Allison transmissions. The body builder Input/Output connectors will provide the appropriate wires needed for the vehicle to interface with the transmission. These connectors provide vehicle speed, sump/retarder temperature, PTO enable capability, range indicator, retarder indicator and various other inputs as required by application. 13WUK provides Allison's 5th generation I/O package 170 and is for the Rugged Duty Series (RDS) vocation Side Loaders.

System Block Diagram:

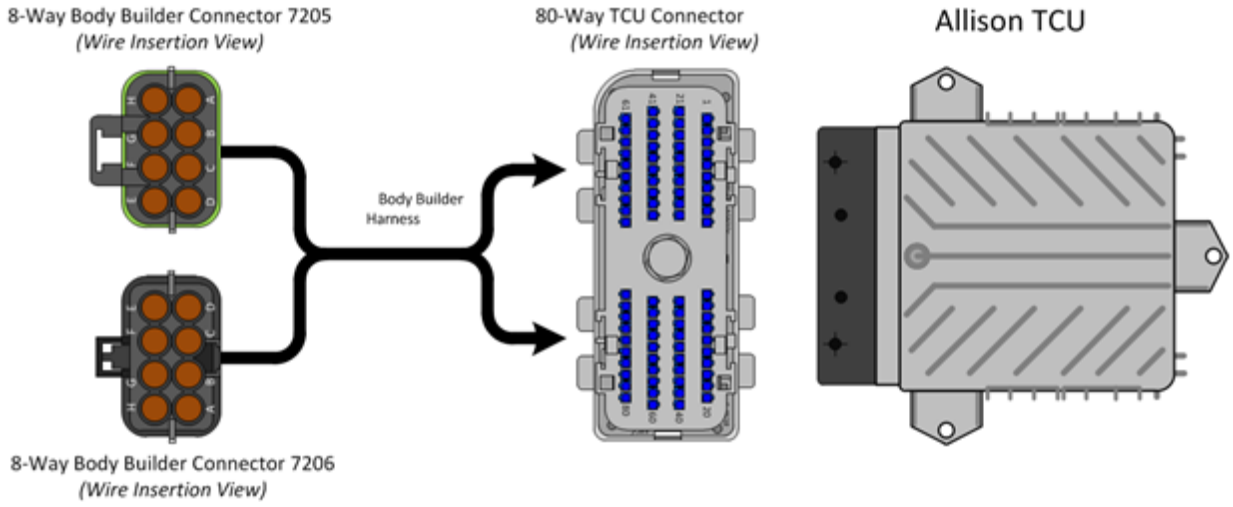

Pinout Functions

CAUTION - A TCM that is powered by 24 volts will provide 24 volts on the PTO enable output.

Connector Number 7205				
Cavity	Circuit Number	I/O	Function	Maximum Current
A	92B103		Signal Return	
B	92#113	Output		
C	92#104			
D	92#129			
E	92#122	Input		
F	92#105	Output	Output Speed Indicator A	500 mAmp
G	92#164	Output	Sump / Retarder Temperature Indicator Output	500 mAmp
H	92#162	Input	Service Brake Status Input	

Connector Number 7206				
Cavity	Circuit Number	I/O	Function	Maximum Current
A	92#101	Input	**Shift Selector Transition**	
B	92#117	Input	**Automatic Neutral - Dual Input with Service Brake Status**	
C	92C103			
D	92#143		PTO Enable Input	
E	92#142	Input	**Automatic Neutral - Dual Input with Service Brake Status**	
F	92#145	Output	**Neutral Indicator for PTO**	500 mAmp
G	92#130		PTO Enable Output	500 mAmp
H	92#123	Input	Neutral at Stop	

Parts Associated with This Feature:

PART NUMBER	DESCRIPTION
80-WAY TRANSMISSION CONTROL MODULE	
3605713C1	80-WAY TCM CONNECTOR BODY (7500)
3606525C1	TCM CONNECTOR LOCK
3686945C1	WIRE TERMINAL 18-GAUGE
3606525C1	CONNECTOR PLUG
8-WAY CONNECTOR 7205 (CHASSIS HARNESS)	

3525872C1	8-WAY CONNECTOR BODY
3525873C1	CONNECTOR LOCK
1661875C1	WIRE TERMINAL 18-GAUGE
1661872C1	WIRE TERMINAL SEAL 18-GAUGE

Parts Associated with This Feature:

PART NUMBER	DESCRIPTION
80-WAY TRANSMISSION CONTROL MODULE	
3605713C1	80-WAY TCM CONNECTOR BODY (7500)
3606525C1	TCM CONNECTOR LOCK
3686945C1	WIRE TERMINAL 18-GAUGE
3606525C1	CONNECTOR PLUG
8-WAY CONNECTOR 7205 (CHASSIS HARNESS)	
3525872C1	8-WAY CONNECTOR BODY
3525873C1	CONNECTOR LOCK
1661875C1	WIRE TERMINAL 18-GAUGE
1661872C1	WIRE TERMINAL SEAL 18-GAUGE
2025431C1	CONNECTOR CAVITY PLUG
8-WAY MATING CONNECTOR FOR 7205 (BODY BUILDER HARNESS)	
3525874C1	8-WAY CONNECTOR BODY
3525873C1	CONNECTOR LOCK
1667742C1	WIRE TERMINAL 18-GAUGE
1661872C1	WIRE TERMINAL SEAL 18-GAUGE
2025431C1	CONNECTOR CAVITY PLUG
8-WAY CONNECTOR 7206 (CHASSIS HARNESS)	
3525874C1	8-WAY CONNECTOR BODY
3525875C1	CONNECTOR LOCK
1667742C1	WIRE TERMINAL 18-GAUGE
1661872C1	WIRE TERMINAL SEAL 18-GAUGE
2025431C1	CONNECTOR CAVITY PLUG
8-WAY MATING CONNECTOR FOR 7206 (BODY BUILDER HARNESS)	
3525872C1	8-WAY CONNECTOR BODY
3525875C1	CONNECTOR LOCK
1661875C1	WIRE TERMINAL 18-GAUGE
1661872C1	WIRE TERMINAL SEAL 18-GAUGE
2025431C1	CONNECTOR CAVITY PLUG

Parts Associated with Feature

How to Test This Feature:

Review this entry carefully and choose the transmission and optional electrical interface feature that is right for the particular equipment application. Reference Allison's software tool and chassis model circuit diagram manual as a programming and diagnostic resource.

References:
Refer to the applicable International® Circuit Diagrams and Service Manuals.

Refer to the Allison Vocational Model Guide:

38.8. 13WUL: ALLISON SPARE INPUT/OUTPUT for Rugged Duty Series (RDS); Street Sweeper.

Feature Applicability to Vehicle Platforms:

- Heavy Vocational (HV)
- Medium Vocational (MV)

Extended Description: Preprogrammed control functions that are designed to meet customer needs are available as optional equipment on Allison transmissions. The body builder Input/Output connectors will provide the appropriate wires needed for the vehicle to interface with the transmission. These connectors provide vehicle speed, sump/retarder temperature, PTO enable capability, range indicator, retarder indicator and various other inputs as required by application. 13WUL provides Allison's 5th generation I/O package 167 and is for the Rugged Duty Series (RDS) vocation Street Sweeper.

System Block Diagram:

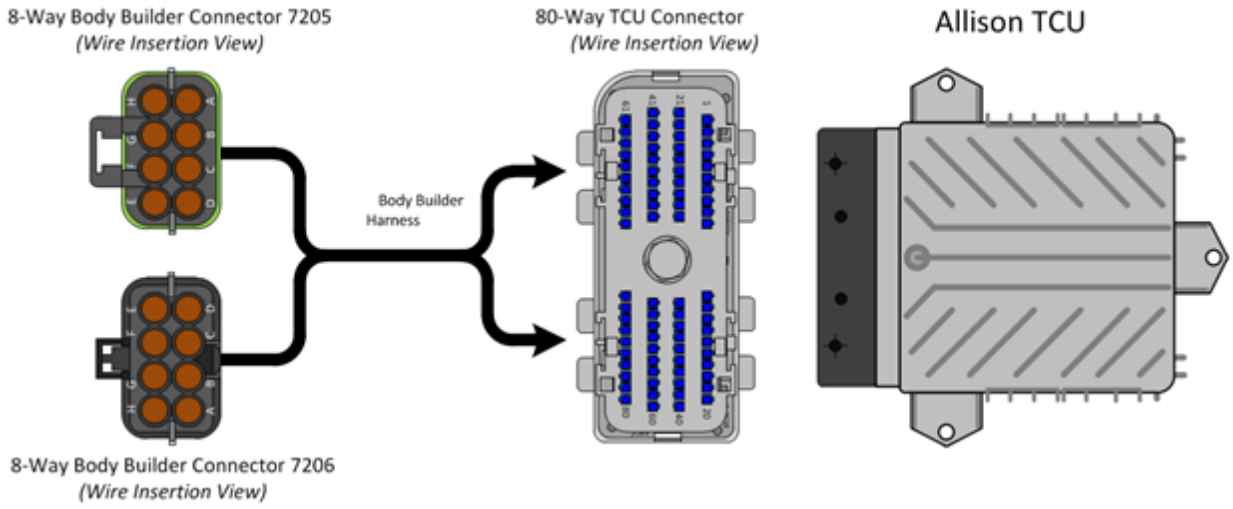

Pinout Functions

CAUTION - A TCM that is powered by 24 volts will provide 24 volts on the PTO enable output.

Connector Number 7205				
Cavity	Circuit Number	I/O	Function	Maximum Current
A	92B103		Signal Return	
B	92#113	Output		
C	92#104			
D	92#129			
E	92#122	Input	Direction Change Enable	
F	92#105	Output	Output Speed Indicator A	500 mAmp
G	92#164	Output	Sump / Retarder Temperature Indicator Output	500 mAmp
H	92#162	Input	Service Brake Status Input	

Connector Number 7206				
Cavity	Circuit Number	I/O	Function	Maximum Current
A	92#101	Input	Two-Speed Axle Enable	
B	92#117	Input	Automatic Neutral - Single Input	
C	92C103			
D	92#143		Reverse Enable	
E	92#142	Input	Secondary Mode Input	
F	92#145	Output	Two-Speed Axle Enable Output	500 mAmp
G	92#130		PTO Enable Output	500 mAmp
H	92#123	Input		

Parts Associated with This Feature:

PART NUMBER	DESCRIPTION
80-WAY TRANSMISSION CONTROL MODULE	
3605713C1	80-WAY TCM CONNECTOR BODY (7500)
3606525C1	TCM CONNECTOR LOCK
3686945C1	WIRE TERMINAL 18-GAUGE
3606525C1	CONNECTOR PLUG

8-WAY CONNECTOR 7205 (CHASSIS HARNESS)	
3525872C1	8-WAY CONNECTOR BODY
3525873C1	CONNECTOR LOCK
1661875C1	WIRE TERMINAL 18-GAUGE
1661872C1	WIRE TERMINAL SEAL 18-GAUGE
2025431C1	CONNECTOR CAVITY PLUG
8-WAY MATING CONNECTOR FOR 7205 (BODY BUILDER HARNESS)	
3525874C1	8-WAY CONNECTOR BODY
3525873C1	CONNECTOR LOCK
1667742C1	WIRE TERMINAL 18-GAUGE
1661872C1	WIRE TERMINAL SEAL 18-GAUGE
2025431C1	CONNECTOR CAVITY PLUG
8-WAY CONNECTOR 7206 (CHASSIS HARNESS)	
3525874C1	8-WAY CONNECTOR BODY
3525875C1	CONNECTOR LOCK
1667742C1	WIRE TERMINAL 18-GAUGE
1661872C1	WIRE TERMINAL SEAL 18-GAUGE
2025431C1	CONNECTOR CAVITY PLUG
8-WAY MATING CONNECTOR FOR 7206 (BODY BUILDER HARNESS)	
3525872C1	8-WAY CONNECTOR BODY
3525875C1	CONNECTOR LOCK
1661875C1	WIRE TERMINAL 18-GAUGE
1661872C1	WIRE TERMINAL SEAL 18-GAUGE
2025431C1	CONNECTOR CAVITY PLUG

Parts Associated with Feature

How to Test This Feature:
Review this entry carefully and choose the transmission and optional electrical interface feature that is right for the particular equipment application. Reference Allison's software tool and chassis model circuit diagram manual as a programming and diagnostic resource.

References:
Refer to the applicable International® Circuit Diagrams and Service Manuals.

Refer to the Allison Vocational Model Guide:

38.9. 13WUN: ALLISON SPARE INPUT/OUTPUT for Motorhome Series (MH), Package Number 226

Feature Applicability to Vehicle Platforms:

- Heavy Vocational (MV)

Extended Description: Preprogrammed control functions that are designed to meet customer needs are available as optional equipment on Allison transmissions. The body builder Input/Output connectors will provide the appropriate wires needed for the vehicle to interface with the transmission. These connectors provide vehicle speed, sump/retarder temperature, PTO enable capability, range indicator, retarder indicator and various other inputs as required by application. 13WUN provides Allison's 5th generation I/O package 226 and is for the Motorhome Series (MH) vocations.

System Block Diagram:

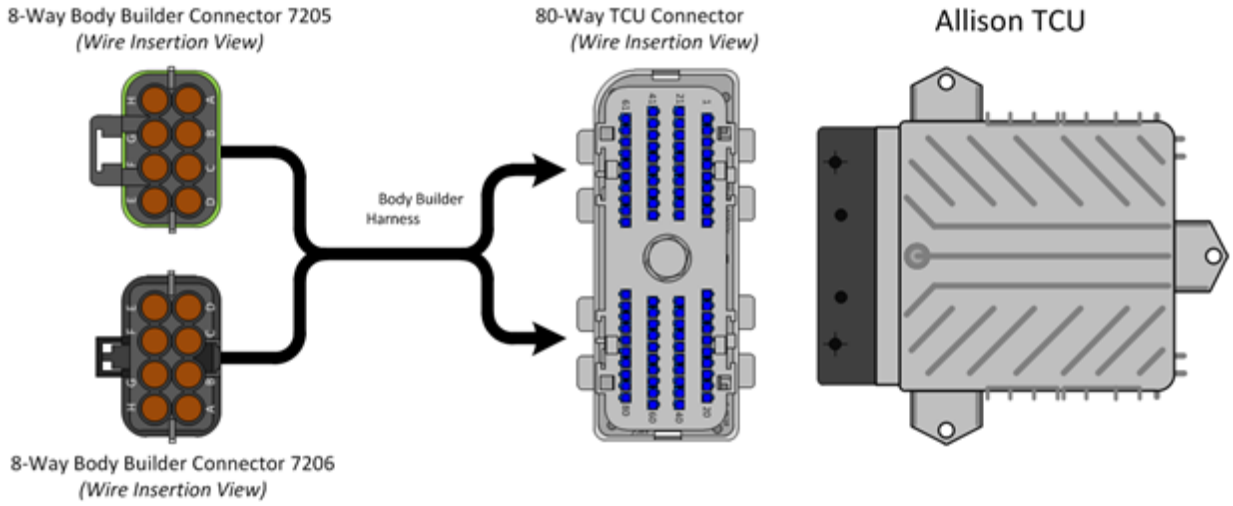

Pinout Functions

CAUTION - A TCM that is powered by 24 volts will provide 24 volts on the PTO enable output.

Connector Number 7205				
Cavity	Circuit Number	I/O	Function	Maximum Current
A	92B103		Signal Return	
B	92#113			
C	92#104	Output	Engine Brake Interface output	
D	92#129			
E	92#122	Input	Direction Change Enable	
F	92#105	Output	Output Speed Indicator A	500 mAmp
G	92#164	Output	Sump / Retarder Temperature Indicator Output	500 mAmp
H	92#162	Input	Service Brake Status Input	

Connector Number 7206				
Cavity	Circuit Number	I/O	Function	Maximum Current
A	92#101	Input	Aux. Function Range Inhibit (Standard)	
B	92#117	Input	Auto Neutral	
C	92C103			
D	92#143			
E	92#142	Input	Auxiliary Hold	
F	92#145	Output	Two-Speed Axle Enable Output	500 mAmp
G	92#130		Engine Overspeed Indicator	500 mAmp
H	92#123	Input	Neutral at stop	

Parts Associated with This Feature:

PART NUMBER	DESCRIPTION
80-WAY TRANSMISSION CONTROL MODULE	
3605713C1	80-WAY TCM CONNECTOR BODY (7500)
3606525C1	TCM CONNECTOR LOCK
3686945C1	WIRE TERMINAL 18-GAUGE

3606525C1	CONNECTOR PLUG
8-WAY CONNECTOR 7205 (CHASSIS HARNESS)	
3525872C1	8-WAY CONNECTOR BODY
3525873C1	CONNECTOR LOCK
1661875C1	WIRE TERMINAL 18-GAUGE
1661872C1	WIRE TERMINAL SEAL 18-GAUGE
2025431C1	CONNECTOR CAVITY PLUG
8-WAY MATING CONNECTOR FOR 7205 (BODY BUILDER HARNESS)	
3525874C1	8-WAY CONNECTOR BODY
3525873C1	CONNECTOR LOCK
1667742C1	WIRE TERMINAL 18-GAUGE
1661872C1	WIRE TERMINAL SEAL 18-GAUGE
2025431C1	CONNECTOR CAVITY PLUG
8-WAY CONNECTOR 7206 (CHASSIS HARNESS)	
3525874C1	8-WAY CONNECTOR BODY
3525875C1	CONNECTOR LOCK
1667742C1	WIRE TERMINAL 18-GAUGE
1661872C1	WIRE TERMINAL SEAL 18-GAUGE
2025431C1	CONNECTOR CAVITY PLUG
8-WAY MATING CONNECTOR FOR 7206 (BODY BUILDER HARNESS)	
3525872C1	8-WAY CONNECTOR BODY
3525875C1	CONNECTOR LOCK
1661875C1	WIRE TERMINAL 18-GAUGE
1661872C1	WIRE TERMINAL SEAL 18-GAUGE
2025431C1	CONNECTOR CAVITY PLUG

Parts Associated with Feature

How to Test This Feature:
Review this entry carefully and choose the transmission and optional electrical interface feature that is right for the particular equipment application. Reference Allison's software tool and chassis model circuit diagram manual as a programming and diagnostic resource.

References:
Refer to the applicable International® Circuit Diagrams and Service Manuals.

Refer to the Allison Vocational Model Guide:

38.10. 13WUR: ALLISON SPARE INPUT/OUTPUT for Rugged Duty Series (RDS); Dump/Construction with Two-Speed Axle or Auxiliary Transmission, Package Number 146

Feature Applicability to Vehicle Platforms:

- Heavy Vocational (HV)
- Medium Vocational (MV)
- Regional Haul (RH)
- Heavy Extreme (HX) 2021 and Newer

Extended Description: Preprogrammed control functions that are designed to meet customer needs are available as optional equipment on Allison transmissions. The body builder Input/Output connectors will provide the appropriate wires needed for the vehicle to interface with the transmission. These connectors provide vehicle speed, sump/retarder temperature, PTO enable capability, range indicator, retarder indicator and various other inputs as required by application. 13WUR provides Allison's 5th generation I/O package 146 and is for the Rugged Duty Series (RDS) vocations Construction/Dump with two-speed axles or auxiliary transmissions.

System Block Diagram:

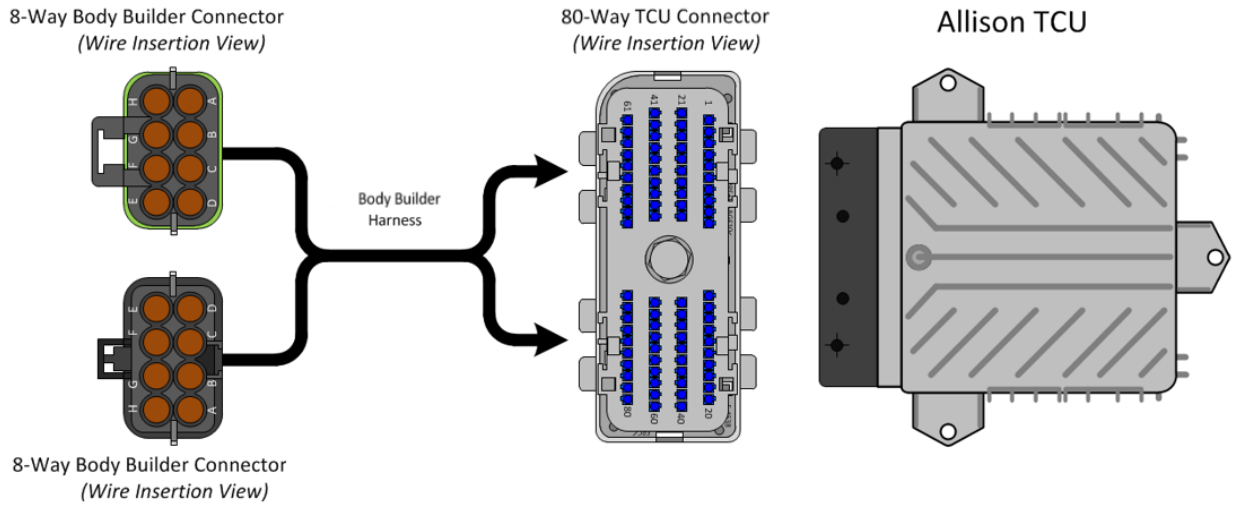

Pinout Functions

CAUTION - A TCM that is powered by 24 volts will provide 24 volts on the PTO enable output.

Connector Number 5710 or 5712				
Cavity	Circuit Number	I/O	Function	Maximum Current
A	92#103B		Signal Return	
B	92#113	Output		
C	92#104			
D	92#124			
E	92#122	Input	**Kickdown**	
F	92#105	Output	Output Speed Indicator A	500 mAmp
G	92#164	Output	Sump / Retarder Temperature Indicator Output	500 mAmp
H	92#162	Input	Service Brake Status Input	

Connector Number 5711 or 5713				
Cavity	Circuit Number	I/O	Function	Maximum Current
A	92#101	Input	Aux. Function Range Inhibit (Standard)	
B	92#117	Input		
C	92#103C			
D	92#143		PTO Enable Input	
E	92#142	Input	**Two-Speed Axle Enable**	
F	92#145	Output	**Two-Speed Axle Enable Output**	500 mAmp
G	92#130		PTO Enable Output	500 mAmp
H	92#123	Input		

Parts Associated with This Feature:

PART NUMBER	DESCRIPTION
80-WAY TRANSMISSION CONTROL MODULE	
3605713C1	80-WAY TCM CONNECTOR BODY (7500)
3606525C1	TCM CONNECTOR LOCK
3686945C1	WIRE TERMINAL 18-GAUGE
3606525C1	CONNECTOR PLUG
8-WAY CONNECTOR 7205 (CHASSIS HARNESS)	
3525872C1	8-WAY CONNECTOR BODY

3525873C1	CONNECTOR LOCK
1661875C1	WIRE TERMINAL 18-GAUGE
1661872C1	WIRE TERMINAL SEAL 18-GAUGE
2025431C1	CONNECTOR CAVITY PLUG
8-WAY MATING CONNECTOR FOR 7205 (BODY BUILDER HARNESS)	
3525874C1	8-WAY CONNECTOR BODY
3525873C1	CONNECTOR LOCK
1667742C1	WIRE TERMINAL 18-GAUGE
1661872C1	WIRE TERMINAL SEAL 18-GAUGE
2025431C1	CONNECTOR CAVITY PLUG
8-WAY CONNECTOR 7206 (CHASSIS HARNESS)	
3525874C1	8-WAY CONNECTOR BODY
3525875C1	CONNECTOR LOCK
1667742C1	WIRE TERMINAL 18-GAUGE
1661872C1	WIRE TERMINAL SEAL 18-GAUGE
2025431C1	CONNECTOR CAVITY PLUG
8-WAY MATING CONNECTOR FOR 7206 (BODY BUILDER HARNESS)	
3525872C1	8-WAY CONNECTOR BODY
3525875C1	CONNECTOR LOCK
1661875C1	WIRE TERMINAL 18-GAUGE
1661872C1	WIRE TERMINAL SEAL 18-GAUGE
2025431C1	CONNECTOR CAVITY PLUG

Parts Associated with Feature

How to Test This Feature:
Review this entry carefully and choose the transmission and optional electrical interface feature that is right for the particular equipment application. Reference Allison's software tool and chassis model circuit diagram manual as a programming and diagnostic resource.

References:
Refer to the applicable International® Circuit Diagrams and Service Manuals.

Refer to the Allison Vocational Model Guide:

38.11. 13WUS: ALLISON SPARE INPUT/OUTPUT for Rugged Duty Series (RDS); General Purpose Trucks Modified for Single Input Auto Neutral.

Feature Applicability to Vehicle Platforms:
- Heavy Vocational (HV)
- Medium Vocational (MV)
- Regional Haul (RH)
- Heavy Extreme (HX) 2021 and Newer

Extended Description: Preprogrammed control functions that are designed to meet customer needs are available as optional equipment on Allison transmissions. The body builder Input/Output connectors will provide the appropriate wires needed for the vehicle to interface with the transmission. These connectors provide vehicle speed, sump/retarder temperature, PTO enable capability, range indicator, retarder indicator and various other inputs as required by application. 13WUS provides Allison's 5th generation I/O package 223 and is for the Rugged Duty Series (RDS) vocations requiring Single Input Auto Neutral enabled in the package.

System Block Diagram:

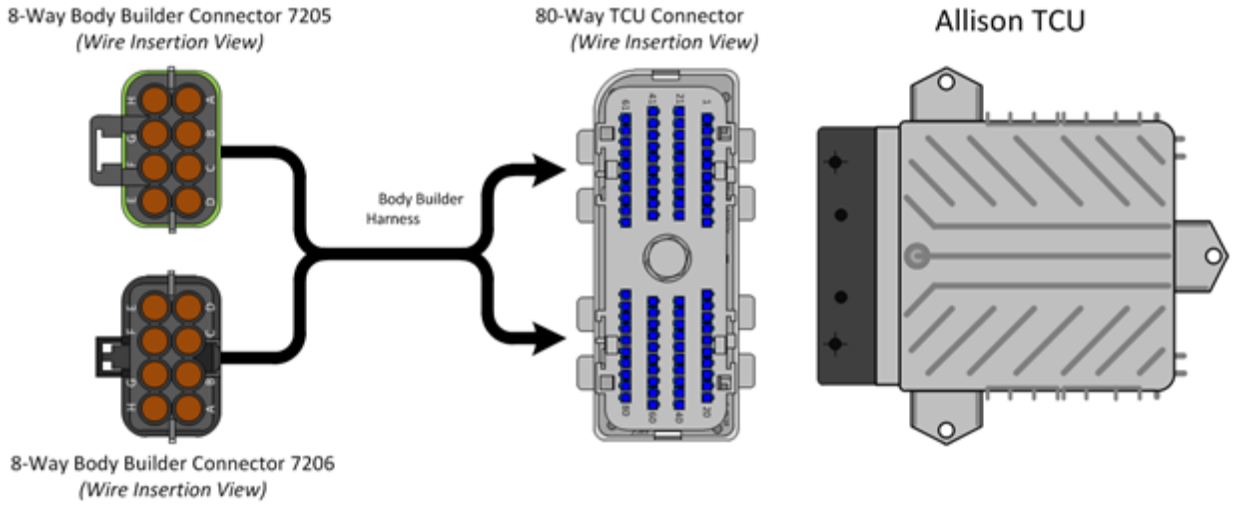

Pinout Functions

CAUTION - A TCM that is powered by 24 volts will provide 24 volts on the PTO enable output.

Function Content of I/O Package 223				
Connector Number 7205				
Cavity	Circuit Number	I/O	Function	Maximum Current
A	92B103		Signal Return	
B	92#113			
C	92#104			
D	92#129			
E	92#122	Input	Direction Change Enable	
F	92#105	Output	Output Speed Indicator A	500 mAmp
G	92#164	Output	Sump / Retarder Temperature Indicator Output	500 mAmp
H	92#162	Input	Service Brake Status Input	

Connector Number 7206				
Cavity	Circuit Number	I/O	Function	Maximum Current
A	92#101	Input	Aux. Function Range Inhibit (Standard)	
B	92#117	Input	Automatic Neutral - Single Input	
C	92C103		Signal Return	
D	92#143		PTO Enable Input	
E	92#142	Input	Auxiliary Hold	
F	92#145	Output	Range Indicator	500 mAmp
G	92#130		PTO Enable Output	500 mAmp
H	92#123	Input	Neutral at Stop	

Parts Associated with This Feature:

PART NUMBER	DESCRIPTION
80-WAY TRANSMISSION CONTROL MODULE	
3605713C1	80-WAY TCM CONNECTOR BODY (7500)
3606525C1	TCM CONNECTOR LOCK
3686945C1	WIRE TERMINAL 18-GAUGE

3606525C1	CONNECTOR PLUG
8-WAY CONNECTOR 7205 (CHASSIS HARNESS)	
3525872C1	8-WAY CONNECTOR BODY
3525873C1	CONNECTOR LOCK
1661875C1	WIRE TERMINAL 18-GAUGE
1661872C1	WIRE TERMINAL SEAL 18-GAUGE
2025431C1	CONNECTOR CAVITY PLUG
8-WAY MATING CONNECTOR FOR 7205 (BODY BUILDER HARNESS)	
3525874C1	8-WAY CONNECTOR BODY
3525873C1	CONNECTOR LOCK
1667742C1	WIRE TERMINAL 18-GAUGE
1661872C1	WIRE TERMINAL SEAL 18-GAUGE
2025431C1	CONNECTOR CAVITY PLUG
8-WAY CONNECTOR 7206 (CHASSIS HARNESS)	
3525874C1	8-WAY CONNECTOR BODY
3525875C1	CONNECTOR LOCK
1667742C1	WIRE TERMINAL 18-GAUGE
1661872C1	WIRE TERMINAL SEAL 18-GAUGE
2025431C1	CONNECTOR CAVITY PLUG
8-WAY MATING CONNECTOR FOR 7206 (BODY BUILDER HARNESS)	
3525872C1	8-WAY CONNECTOR BODY
3525875C1	CONNECTOR LOCK
1661875C1	WIRE TERMINAL 18-GAUGE
1661872C1	WIRE TERMINAL SEAL 18-GAUGE
2025431C1	CONNECTOR CAVITY PLUG

Parts Associated with Feature

How to Test This Feature:
Review this entry carefully and choose the transmission and optional electrical interface feature that is right for the particular equipment application. Reference Allison's software tool and chassis model circuit diagram manual as a programming and diagnostic resource.

References:
Refer to the applicable International® Circuit Diagrams and Service Manuals.

Refer to the Allison Vocational Model Guide:

38.12. 13WUT: ALLISON SPARE INPUT/OUTPUT for Emergency Vehicle Series (EVS); Without Split Shaft PTO.

Feature Applicability to Vehicle Platforms:

- Heavy Vocational (HV)
- Medium Vocational (MV)

Extended Description: Preprogrammed control functions that are designed to meet customer needs are available as optional equipment on Allison transmissions. The body builder Input/Output connectors will provide the appropriate wires needed for the vehicle to interface with the transmission. These connectors provide vehicle speed, sump/retarder temperature, PTO enable capability, range indicator, retarder indicator and various other inputs as required by application. 13WUT provides Allison's 5th generation I/O package 227 and is for the Emergency Vehicle Series (EVS) vocations without Split Shaft PTO.

System Block Diagram:

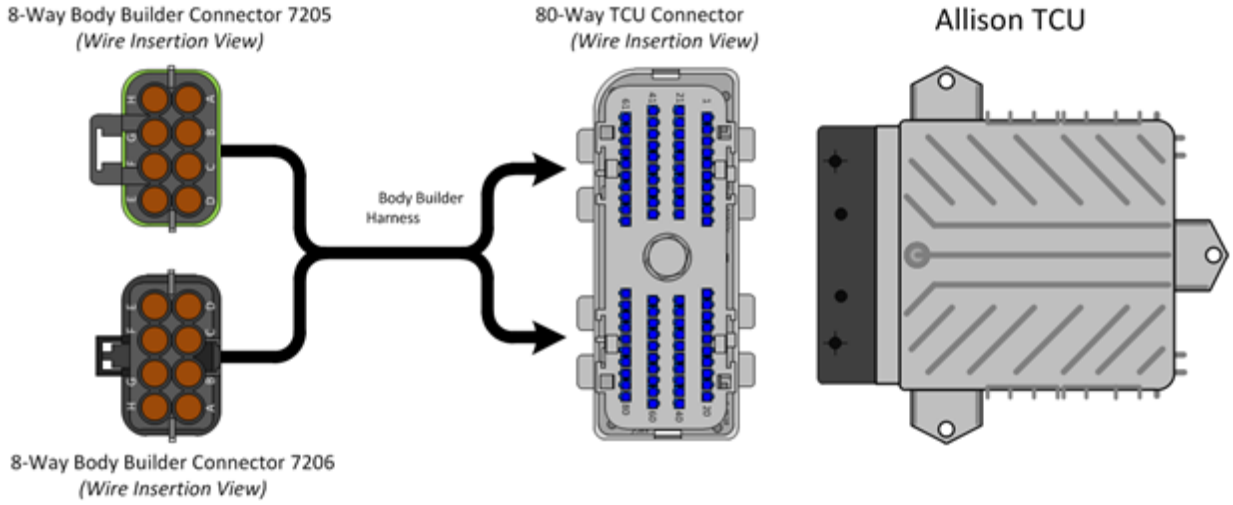

Pinout Functions

CAUTION - A TCM that is powered by 24 volts will provide 24 volts on the PTO enable output.

Function Content of I/O Package 227				
Connector Number 7205				
Cavity	Circuit Number	I/O	Function	Maximum Current
A	92B103		Signal Return	
B	92#113			
C	92#104		Engine Brake Interface Output	
D	92#129			
E	92#122	Input		
F	92#105	Output	Output Speed Indicator A	500 mAmp
G	92#164	Output	Transmission Service Indicator	500 mAmp
H	92#162	Input	Service Brake Status Input	

Connector Number 7206				
Cavity	Circuit Number	I/O	Function	Maximum Current
A	92#101	Input	Aux. Function Range Inhibit (Special)	
B	92#117	Input		
C	92C103			
D	92#143		PTO Enable Input	
E	92#142	Input	Aux. Function Range Inhibit (Special)	
F	92#145	Output	Neutral Indicator for PTO	500 mAmp
G	92#130		PTO Enable Output	500 mAmp
H	92#123	Input		

Parts Associated with This Feature:

PART NUMBER	DESCRIPTION
80-WAY TRANSMISSION CONTROL MODULE	
3605713C1	80-WAY TCM CONNECTOR BODY (7500)
3606525C1	TCM CONNECTOR LOCK
3686945C1	WIRE TERMINAL 18-GAUGE
3606525C1	CONNECTOR PLUG
8-WAY CONNECTOR 7205 (CHASSIS HARNESS)	

3525872C1	8-WAY CONNECTOR BODY
3525873C1	CONNECTOR LOCK
1661875C1	WIRE TERMINAL 18-GAUGE
1661872C1	WIRE TERMINAL SEAL 18-GAUGE
2025431C1	CONNECTOR CAVITY PLUG
8-WAY MATING CONNECTOR FOR 7205 (BODY BUILDER HARNESS)	
3525874C1	8-WAY CONNECTOR BODY
3525873C1	CONNECTOR LOCK
1667742C1	WIRE TERMINAL 18-GAUGE
1661872C1	WIRE TERMINAL SEAL 18-GAUGE
2025431C1	CONNECTOR CAVITY PLUG
8-WAY CONNECTOR 7206 (CHASSIS HARNESS)	
3525874C1	8-WAY CONNECTOR BODY
3525875C1	CONNECTOR LOCK
1667742C1	WIRE TERMINAL 18-GAUGE
1661872C1	WIRE TERMINAL SEAL 18-GAUGE
2025431C1	CONNECTOR CAVITY PLUG
8-WAY MATING CONNECTOR FOR 7206 (BODY BUILDER HARNESS)	
3525872C1	8-WAY CONNECTOR BODY
3525875C1	CONNECTOR LOCK
1661875C1	WIRE TERMINAL 18-GAUGE
1661872C1	WIRE TERMINAL SEAL 18-GAUGE
2025431C1	CONNECTOR CAVITY PLUG

Parts Associated with Feature

How to Test This Feature:
Review this entry carefully and choose the transmission and optional electrical interface feature that is right for the particular equipment application. Reference Allison's software tool and chassis model circuit diagram manual as a programming and diagnostic resource.

References:
Refer to the applicable International® Circuit Diagrams and Service Manuals.

Refer to the Allison Vocational Model Guide:

38.13. 13WUV: ALLISON SPARE INPUT/OUTPUT for Highway Series (HS); General Purpose Trucks Modified for Single Input Auto Neutral.

Feature Applicability to Vehicle Platforms:

- Heavy Vocational (HV)
- Medium Vocational (MV)
- Regional Haul (RH)

Extended Description: Preprogrammed control functions that are designed to meet customer needs are available as optional equipment on Allison transmissions. The body builder Input/Output connectors will provide the appropriate wires needed for the vehicle to interface with the transmission. These connectors provide vehicle speed, sump/retarder temperature, PTO enable capability, range indicator, retarder indicator and various other inputs as required by application. 13WUV provides Allison's 5th generation I/O package 226 and is for Highway Series (HS) vocation requiring Single Input Auto Neutral enabled in the package.

System Block Diagram:

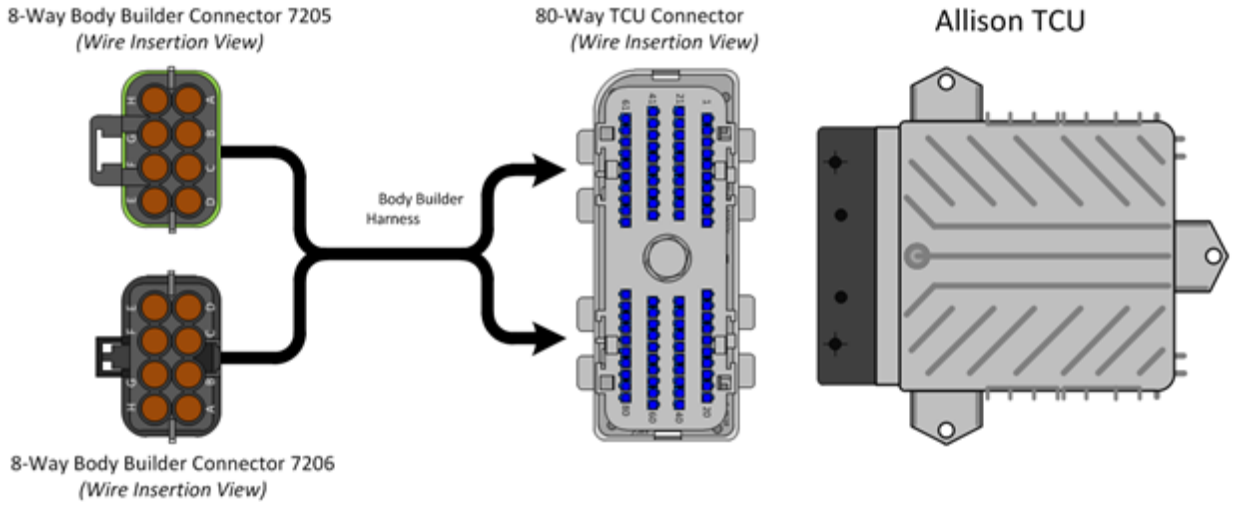

Pinout Functions

CAUTION - A TCM that is powered by 24 volts will provide 24 volts on the PTO enable output.

Connector Number 7205				
Cavity	Circuit Number	I/O	Function	Maximum Current
A	92B103		Signal Return	
B	92#113			
C	92#104		Engine Brake Interface Output	
D	92#129			
E	92#122	Input	Direction Change Enable	
F	92#105	Output	Output Speed Indicator A	500 mAmp
G	92#164	Output	Sump / Retarder Temperature Indicator Output	500 mAmp
H	92#162	Input	Service Brake Status Input	

Connector Number 7206				
Cavity	Circuit Number	I/O	Function	Maximum Current
A	92#101	Input	Aux. Function Range Inhibit (Single Input)	
B	92#117	Input	Automatic Neutral - Single Input	
C	92C103		Signal Return	
D	92#143			
E	92#142	Input	Auxiliary Hold	
F	92#145	Output	Range Indicator	500 mAmp
G	92#130	Output	Engine Overspeed Indicator	500 mAmp
H	92#123	Input		

Parts Associated with This Feature:

PART NUMBER	DESCRIPTION
80-WAY TRANSMISSION CONTROL MODULE	
3605713C1	80-WAY TCM CONNECTOR BODY (7500)
3606525C1	TCM CONNECTOR LOCK

3686945C1	WIRE TERMINAL 18-GAUGE
3606525C1	CONNECTOR PLUG
8-WAY CONNECTOR 7205 (CHASSIS HARNESS)	
3525872C1	8-WAY CONNECTOR BODY
3525873C1	CONNECTOR LOCK
1661875C1	WIRE TERMINAL 18-GAUGE
1661872C1	WIRE TERMINAL SEAL 18-GAUGE
2025431C1	CONNECTOR CAVITY PLUG
8-WAY MATING CONNECTOR FOR 7205 (BODY BUILDER HARNESS)	
3525874C1	8-WAY CONNECTOR BODY
3525873C1	CONNECTOR LOCK
1667742C1	WIRE TERMINAL 18-GAUGE
1661872C1	WIRE TERMINAL SEAL 18-GAUGE
2025431C1	CONNECTOR CAVITY PLUG
8-WAY CONNECTOR 7206 (CHASSIS HARNESS)	
3525874C1	8-WAY CONNECTOR BODY
3525875C1	CONNECTOR LOCK
1667742C1	WIRE TERMINAL 18-GAUGE
1661872C1	WIRE TERMINAL SEAL 18-GAUGE
2025431C1	CONNECTOR CAVITY PLUG
8-WAY MATING CONNECTOR FOR 7206 (BODY BUILDER HARNESS)	
3525872C1	8-WAY CONNECTOR BODY
3525875C1	CONNECTOR LOCK
1661875C1	WIRE TERMINAL 18-GAUGE
1661872C1	WIRE TERMINAL SEAL 18-GAUGE
2025431C1	CONNECTOR CAVITY PLUG

Parts Associated with Feature

How to Test This Feature:
Review this entry carefully and choose the transmission and optional electrical interface feature that is right for the particular equipment application. Reference Allison's software tool and chassis model circuit diagram manual as a programming and diagnostic resource.

References:
Refer to the applicable International® Circuit Diagrams and Service Manuals.

Refer to the Allison Vocational Model Guide:

38.14. 13WUY: ALLISON SPARE INPUT/OUTPUT for Oil Field Series (OFS), **Package Number 193**

Feature Applicability to Vehicle Platforms:

- Heavy Extreme (HX) 2021 and Newer

Extended Description: Preprogrammed control functions that are designed to meet customer needs are available as optional equipment on Allison transmissions. The body builder Input/Output connectors will provide the appropriate wires needed for the vehicle to interface with the transmission. These connectors provide sump/retarder temperature, range indicator, retarder indicator and various other inputs as required by application. 13WUY provides Allison's 5th generation I/O package 193 and is for the Oil Field Series (OFS) vocations.

System Block Diagram:

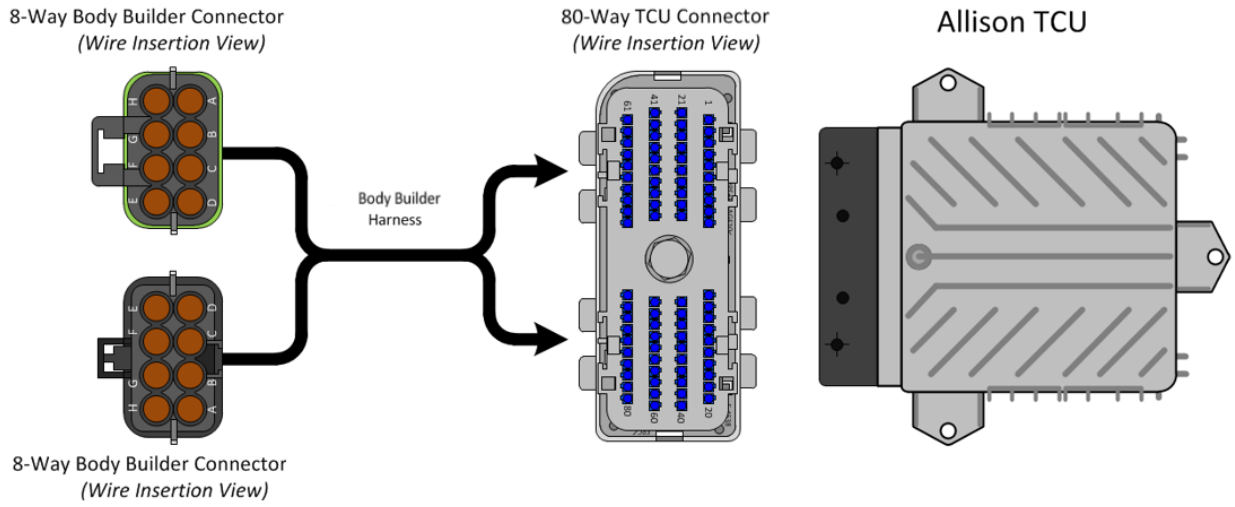

Pinout Functions

CAUTION - A TCM that is powered by 24 volts will provide 24 volts on the PTO enable output.

Function Content of I/O Package 193				
Connector Number 5710 or 5712				
Cavity	Circuit Number	I/O	Function	Maximum Current
A	92#103B		Signal Return	
B	92#113	Output		
C	92#104			
D	92#124	Output	Retarder Interface Output	500 mAmp
E	92#122	Input		
F	92#105	Output	Lockup Indicator	500 mAmp
G	92#164	Output	Sump Retarder Temperature Indicator	500 mAmp
H	92#162	Input	Service Brake Status Input	

Connector Number 5711 or 5713				
Cavity	Circuit Number	I/O	Function	Maximum Current
A	92#101	Input	Aux Function Range Inhibit	
B	92#117B	Input	Automatic Neutral - Single Input	
C	92#103C		Signal Return	
D	92#143		Quick to Neutral Pump	
E	92#142	Input	Shift Selector Transition & Oil Field Pumping Input	
F	92#145	Output	Range Indicator	500 mAmp
G	92#130	Output		500 mAmp
H	92#123	Input	Manual Lockup Enable	

Parts Associated with This Feature:

PART NUMBER	DESCRIPTION
80-WAY TRANSMISSION CONTROL MODULE	
3605713C1	80-WAY TCM CONNECTOR BODY (7500)
3606525C1	TCM CONNECTOR LOCK
3686945C1	WIRE TERMINAL 18-GAUGE
3606525C1	CONNECTOR PLUG

8-WAY CONNECTOR 7205 (CHASSIS HARNESS)	
3525872C1	8-WAY CONNECTOR BODY
3525873C1	CONNECTOR LOCK
1661875C1	WIRE TERMINAL 18-GAUGE
1661872C1	WIRE TERMINAL SEAL 18-GAUGE
2025431C1	CONNECTOR CAVITY PLUG
8-WAY MATING CONNECTOR FOR 7205 (BODY BUILDER HARNESS)	
3525874C1	8-WAY CONNECTOR BODY
3525873C1	CONNECTOR LOCK
1667742C1	WIRE TERMINAL 18-GAUGE
1661872C1	WIRE TERMINAL SEAL 18-GAUGE
2025431C1	CONNECTOR CAVITY PLUG
8-WAY CONNECTOR 7206 (CHASSIS HARNESS)	
3525874C1	8-WAY CONNECTOR BODY
3525875C1	CONNECTOR LOCK
1667742C1	WIRE TERMINAL 18-GAUGE
1661872C1	WIRE TERMINAL SEAL 18-GAUGE
2025431C1	CONNECTOR CAVITY PLUG
8-WAY MATING CONNECTOR FOR 7206 (BODY BUILDER HARNESS)	
3525872C1	8-WAY CONNECTOR BODY
3525875C1	CONNECTOR LOCK
1661875C1	WIRE TERMINAL 18-GAUGE
1661872C1	WIRE TERMINAL SEAL 18-GAUGE
2025431C1	CONNECTOR CAVITY PLUG

Parts Associated with Feature

How to Test This Feature:
Review this entry carefully and choose the transmission and optional electrical interface feature that is right for the particular equipment application. Reference Allison's software tool and chassis model circuit diagram manual as programming and diagnostic resource.

References:
Refer to the applicable International® Circuit Diagrams and Service Manuals.

Refer to the Allison Vocational Model Guide:

38.15. 13WUZ: ALLISON SPARE INPUT/OUTPUT for Emergency Vehicle Series (EVS), Fire/Pumper, Tank, Aerial/Ladder, Package Number 198, Includes J1939 Based Auto Neutral.

Feature Applicability to Vehicle Platforms:
- Heavy Vocational (HV)

- Medium Vocational (MV)
- Heavy Extreme (HX) 2021 and Newer

Extended Description: Preprogrammed control functions that are designed to meet customer needs are available as optional equipment on Allison transmissions. The body builder Input/Output connectors will provide the appropriate wires needed for the vehicle to interface with the transmission. These connectors provide vehicle speed, sump/retarder temperature, PTO enable capability, range indicator, retarder indicator and various other inputs as required by application. 13WUZ provides Allison's 5th generation I/O package 198 and is for Emergency Vehicle Series (EVS) vocations requiring J1939 based Auto Neutral enabled in the package.

Code 13WUZ is the same package as code 13WUE except it includes the SAE J1939 based park brake auto neutral feature to receive a park brake status. This method does not require a park brake status wired directly to the transmission controller. This code applies to emergency vehicles that utilize split shaft PTO and are required to meet NFPA regulations. Applications not requiring the auto neutral feature should continue to use code 13WUE or other applicable I/O codes.

System Block Diagram:

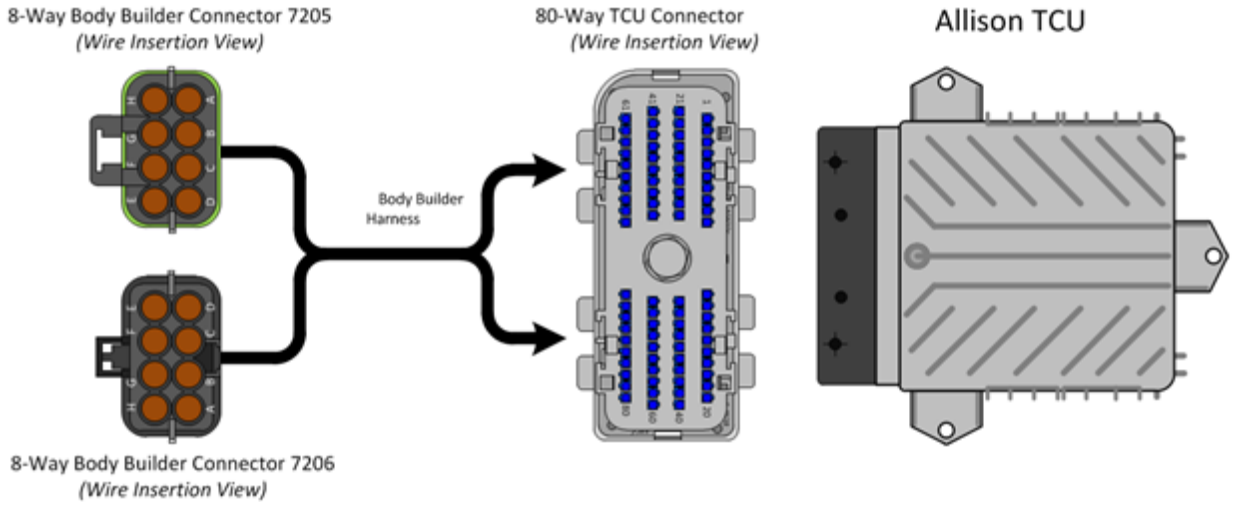

Pinout Functions

CAUTION - A TCM that is powered by 24 volts will provide 24 volts on the PTO enable output.

Connector Number 7205				
Cavity	Circuit Number	I/O	Function	Maximum Current
A	92B103		Signal Return	
B	92#113	Output	Neutral Indicator for PTO and PTO Request (NIPTO)	
C	92#104		Engine Brake Interface Output	
D	92#129			
E	92#122	Input	Pump Mode Input (Fire Truck Pump Mode 4th Lockup)	
F	92#105	Output	Output Speed Indicator	500 mAmp
G	92#164	Output		500 mAmp
H	92#162	Input	Service Brake Status Input	

Connector Number 7206				
Cavity	Circuit Number	I/O	Function	Maximum Current
A	92#101	Input		
B	92#117	Input	Automatic Neutral - Single Input	
C	92C103			
D	92#143			
E	92#142	Input	PTO Drive Interface 1 Input	
F	92#145	Output	Range Indicator	500 mAmp
G	92#130	Output	PTO Drive Interface Indicator	500 mAmp
H	92#123	Input	Pump Mode Input (Fire Truck Pump Mode 4th Lockup	

Parts Associated with This Feature:

PART NUMBER	DESCRIPTION

80-WAY TRANSMISSION CONTROL MODULE	
3605713C1	80-WAY TCM CONNECTOR BODY (7500)
3606525C1	TCM CONNECTOR LOCK
3686945C1	WIRE TERMINAL 18-GAUGE
3606525C1	CONNECTOR PLUG
8-WAY CONNECTOR 7205 (CHASSIS HARNESS)	
3525872C1	8-WAY CONNECTOR BODY
3525873C1	CONNECTOR LOCK
1661875C1	WIRE TERMINAL 18-GAUGE
1661872C1	WIRE TERMINAL SEAL 18-GAUGE
2025431C1	CONNECTOR CAVITY PLUG
8-WAY MATING CONNECTOR FOR 7205 (BODY BUILDER HARNESS)	
3525874C1	8-WAY CONNECTOR BODY
3525873C1	CONNECTOR LOCK
1667742C1	WIRE TERMINAL 18-GAUGE
1661872C1	WIRE TERMINAL SEAL 18-GAUGE
2025431C1	CONNECTOR CAVITY PLUG
8-WAY CONNECTOR 7206 (CHASSIS HARNESS)	
3525874C1	8-WAY CONNECTOR BODY
3525875C1	CONNECTOR LOCK
1667742C1	WIRE TERMINAL 18-GAUGE
1661872C1	WIRE TERMINAL SEAL 18-GAUGE
2025431C1	CONNECTOR CAVITY PLUG
8-WAY MATING CONNECTOR FOR 7206 (BODY BUILDER HARNESS)	
3525872C1	8-WAY CONNECTOR BODY
3525875C1	CONNECTOR LOCK
1661875C1	WIRE TERMINAL 18-GAUGE
1661872C1	WIRE TERMINAL SEAL 18-GAUGE
2025431C1	CONNECTOR CAVITY PLUG

Parts Associated with Feature

How to Test This Feature:
Review this entry carefully and choose the transmission and optional electrical interface feature that is right for the particular equipment application. Reference Allison's software tool and chassis model circuit diagram manual as a programming and diagnostic resource.

References:
Refer to the applicable International® Circuit Diagrams and Service Manuals.

Refer to the Allison Vocational Model Guide:

38.16. 13WVA: ALLISON SPARE INPUT/OUTPUT for Emergency Vehicle Series (EVS), 303/360 Includes J1939 Based Auto Neutral; Fire/Pumper, Tank, Aerial/Ladder.

Feature Applicability to Vehicle Platforms:

- Medium Vocational (MV)

Extended Description: 13WVA is for Allison 3000/4000 series transmissions. The feature includes two eight-way connectors populated with associated wiring and with mating connectors and cavity plugs located in the engine compartment on the driver's side near the window wiper motor. It is available for emergency vehicle applications that require the transmission to shift to neutral any time the park brake is engaged. The transmission will remain in neutral when the park brake is disengaged requiring the operator to shift the transmission into a forward or reverse gear. The feature also includes the capability to enable 3rd gear lock up for split shaft pump operation. Allison DOC software must be used by the equipment installer to enable the 3rd gear lockup feature after the split shaft pump is installed. The Allison 5th generation controls reference this feature as package 360. Reference Allison documentation for wire assignments available in the package.

System Block Diagram:

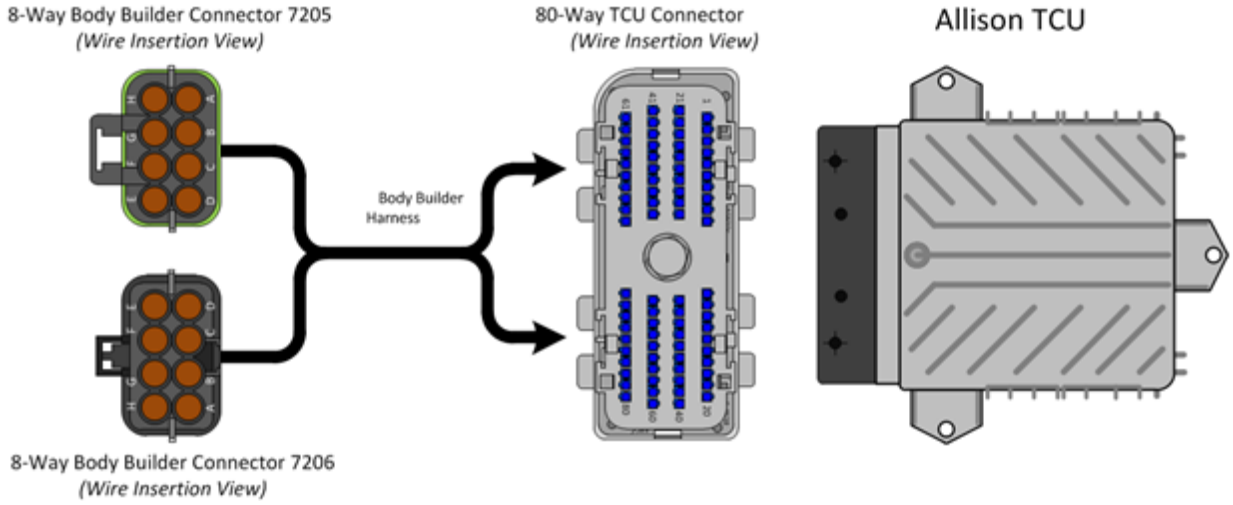

Pinout Functions

CAUTION - A TCM that is powered by 24 volts will provide 24 volts on the PTO enable output.

Connector Number 7205				
Cavity	Circuit Number	I/O	Function	Maximum Current
A	92B103		Signal Return	
B		Input		
C	92#150	Output	PTO Drive Interface Indicator	500 mAmp
D				
E	92#122	Input	Pump Mode Input (3rd Lockup	
F	92#105	Output	Output Speed Indicator	500 mAmp
G	92#164	Output	Sump/Retarder Temperature Indicator	500 mAmp
H	92#162	Input	Service Brake Status Input	

Connector Number 7206				
Cavity	Circuit Number	I/O	Function	Maximum Current
A	92#101	Input		
B	92#117	Input		
C	92C103		Signal Return	
D	92#143		PTO Drive Interface Input	
E	92#142	Input	Secondary Mode Input	
F	92#145	Output	Range Indicator (3rd)	500 mAmp
G	92#130	Output		500 mAmp
H	92#123	Input	Pump Mode Input (3rd Lockup	

Parts Associated with This Feature:

PART NUMBER	DESCRIPTION
80-WAY TRANSMISSION CONTROL MODULE	
3605713C1	80-WAY TCM CONNECTOR BODY (7500)
3606525C1	TCM CONNECTOR LOCK
3686945C1	WIRE TERMINAL 18-GAUGE
3606525C1	CONNECTOR PLUG

8-WAY CONNECTOR 7205 (CHASSIS HARNESS)	
3525872C1	8-WAY CONNECTOR BODY
3525873C1	CONNECTOR LOCK
1661875C1	WIRE TERMINAL 18-GAUGE
1661872C1	WIRE TERMINAL SEAL 18-GAUGE
2025431C1	CONNECTOR CAVITY PLUG
8-WAY MATING CONNECTOR FOR 7205 (BODY BUILDER HARNESS)	
3525874C1	8-WAY CONNECTOR BODY
3525873C1	CONNECTOR LOCK
1667742C1	WIRE TERMINAL 18-GAUGE
1661872C1	WIRE TERMINAL SEAL 18-GAUGE
2025431C1	CONNECTOR CAVITY PLUG
8-WAY CONNECTOR 7206 (CHASSIS HARNESS)	
3525874C1	8-WAY CONNECTOR BODY
3525875C1	CONNECTOR LOCK
1667742C1	WIRE TERMINAL 18-GAUGE
1661872C1	WIRE TERMINAL SEAL 18-GAUGE
2025431C1	CONNECTOR CAVITY PLUG
8-WAY MATING CONNECTOR FOR 7206 (BODY BUILDER HARNESS)	
3525872C1	8-WAY CONNECTOR BODY
3525875C1	CONNECTOR LOCK
1661875C1	WIRE TERMINAL 18-GAUGE
1661872C1	WIRE TERMINAL SEAL 18-GAUGE
2025431C1	CONNECTOR CAVITY PLUG

Parts Associated with Feature

How to Test This Feature:
Review this entry carefully and choose the transmission and optional electrical interface feature that is right for the particular equipment application. Reference Allison's software tool and chassis model circuit diagram manual as a programming and diagnostic resource.

References:
Refer to the applicable International® Circuit Diagrams and Service Manuals.

Refer to the Allison Vocational Model Guide:

38.17. 13WVB: ALLISON SPARE INPUT/OUTPUT for Emergency Vehicle Series (EVS), Rescue, Ambulance, Package Number 170, Includes J1939 Based Auto Neutral.

Feature Applicability to Vehicle Platforms:
- Heavy Vocational (HV)
- Medium Vocational (MV)

Extended Description: 13WVB is for Allison 3000/4000 series transmissions. The feature includes two eight-way connectors populated with associated wiring and with mating connectors and cavity plugs located in the engine compartment on the driver's side near the window wiper motor. It is available for emergency vehicle applications that require the transmission to shift to neutral any time the park brake is engaged. The transmission will remain in neutral when the park brake is disengaged requiring the operator to shift the transmission into a forward or reverse gear. The Allison 5th generation controls reference this feature as package 170. Reference Allison documentation for wire assignments available in the package.

System Block Diagram:

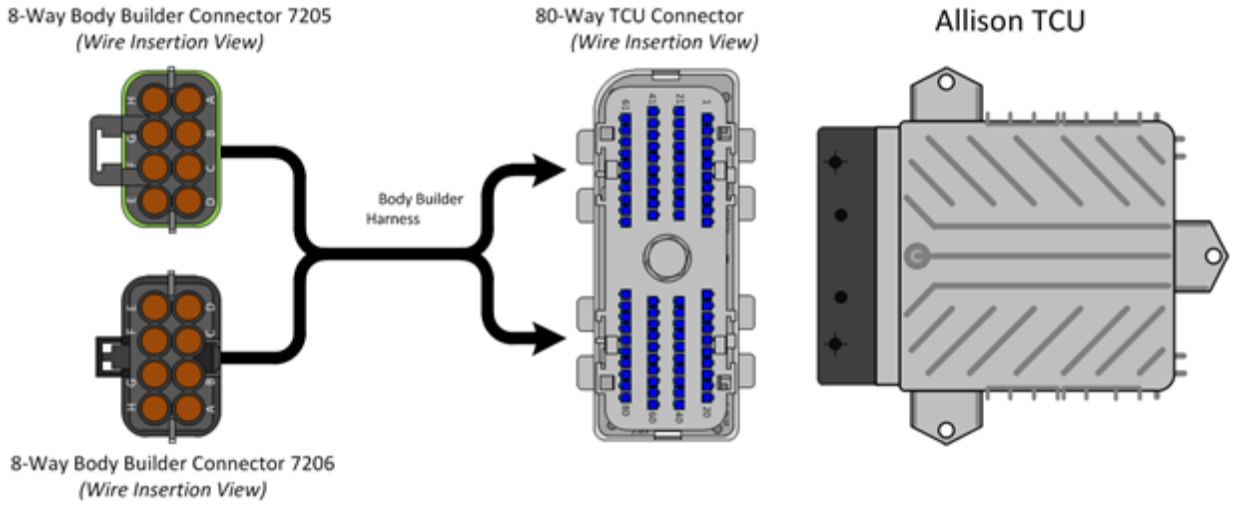

Pinout Functions

CAUTION - A TCM that is powered by 24 volts will provide 24 volts on the PTO enable output.

Connector Number 7205				
Cavity	Circuit Number	I/O	Function	Maximum Current
A	92B103		Signal Return	
B	92#113	Output	Range Indicator	
C	92#104	Output	Engine Brake Interface Output	500 mAmp
D	92#129			
E	92#122	Input		
F	92#105	Output	Output Speed Indicator	500 mAmp
G	92#164	Output	Sump/Retarder Temperature Indicator	500 mAmp
H	92#162	Input	Service Brake Status Input	

Connector Number 7206				
Cavity	Circuit Number	I/O	Function	Maximum Current
A	92#101	Input	Shift Selector Transition Input	
B	92#117	Input	Automatic Neutral - Dual Input w/ Service Brake Status	
C	92C103		Signal Return	
D	92#143		PTO Enable Input	
E	92#142	Input	Automatic Neutral - Dual Input w/ Service Brake Status	
F	92#145	Output	Neutral Indicator for PTO and PTO Request (NIPTO)	500 mAmp
G	92#130	Output	PTO Drive Interface 1 Output	500 mAmp
H	92#123	Input	Neutral at Stop	

Parts Associated with This Feature:

PART NUMBER	DESCRIPTION
80-WAY TRANSMISSION CONTROL MODULE	
3605713C1	80-WAY TCM CONNECTOR BODY (7500)

3606525C1	TCM CONNECTOR LOCK
3686945C1	WIRE TERMINAL 18-GAUGE
3606525C1	CONNECTOR PLUG
8-WAY CONNECTOR 7205 (CHASSIS HARNESS)	
3525872C1	8-WAY CONNECTOR BODY
3525873C1	CONNECTOR LOCK
1661875C1	WIRE TERMINAL 18-GAUGE
1661872C1	WIRE TERMINAL SEAL 18-GAUGE
2025431C1	CONNECTOR CAVITY PLUG
8-WAY MATING CONNECTOR FOR 7205 (BODY BUILDER HARNESS)	
3525874C1	8-WAY CONNECTOR BODY
3525873C1	CONNECTOR LOCK
1667742C1	WIRE TERMINAL 18-GAUGE
1661872C1	WIRE TERMINAL SEAL 18-GAUGE
2025431C1	CONNECTOR CAVITY PLUG
8-WAY CONNECTOR 7206 (CHASSIS HARNESS)	
3525874C1	8-WAY CONNECTOR BODY
3525875C1	CONNECTOR LOCK
1667742C1	WIRE TERMINAL 18-GAUGE
1661872C1	WIRE TERMINAL SEAL 18-GAUGE
2025431C1	CONNECTOR CAVITY PLUG
8-WAY MATING CONNECTOR FOR 7206 (BODY BUILDER HARNESS)	
3525872C1	8-WAY CONNECTOR BODY
3525875C1	CONNECTOR LOCK
1661875C1	WIRE TERMINAL 18-GAUGE
1661872C1	WIRE TERMINAL SEAL 18-GAUGE
2025431C1	CONNECTOR CAVITY PLUG

Parts Associated with Feature

How to Test This Feature:
Review this entry carefully and choose the transmission and optional electrical interface feature that is right for the particular equipment application. Reference Allison's software tool and chassis model circuit diagram manual as a programming and diagnostic resource.

References:
Refer to the applicable International® Circuit Diagrams and Service Manuals.

Refer to the Allison Vocational Model Guide:

38.18. 13WVX: ALLISON SPARE INPUT/OUTPUT for Rugged Duty Series (RDS), On/Off Highway, Package Number 235

Feature Applicability to Vehicle Platforms:

- Heavy Vocational (HV)
- Heavy Extreme (HX) 2021 and Newer

Extended Description: Preprogrammed control functions that are designed to meet customer needs are available as optional equipment on Allison transmissions. The body builder Input/Output connectors will provide the appropriate wires needed for the vehicle to interface with the transmission. These connectors provide vehicle speed, sump/retarder temperature, PTO enable capability, range indicator, retarder indicator and various other inputs as required by application. 13WVX provides Allison's 5th generation I/O package 235.

System Block Diagram:

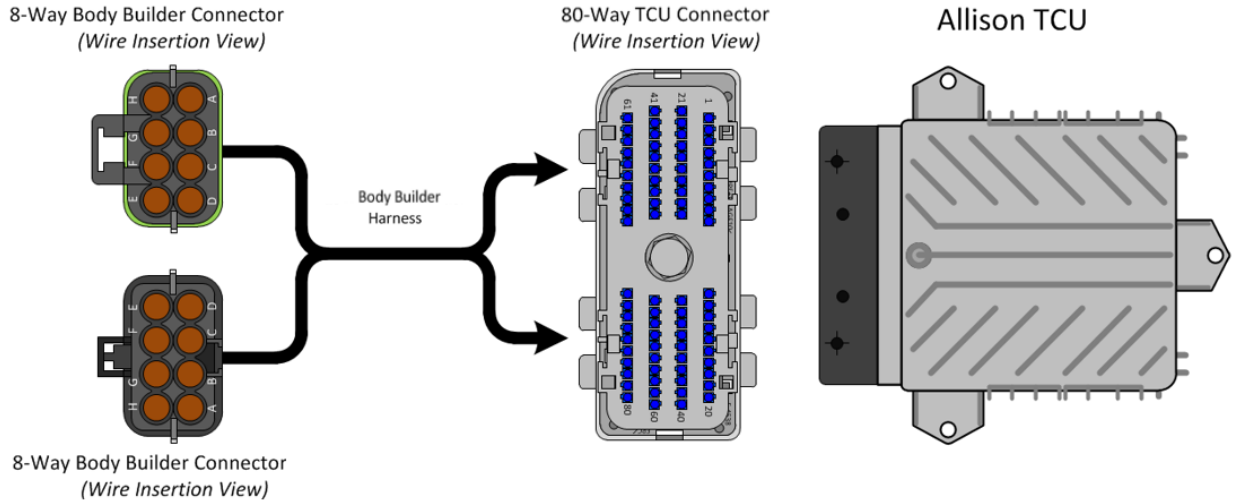

Pinout Functions

CAUTION - A TCM that is powered by 24 volts will provide 24 volts on the PTO enable output.

Connector Number 5710 or 5712				
Cavity	Circuit Number	I/O	Function	Maximum Current
A	92#103B		Signal Return	
B	92#113	Output	Secondary Mode Indicator	
C	92#104		Engine Brake Interface Output	
D	92#124	Output	Retarder Interface Output	
E	92#122	Input	Accelerator Kickdown Input	
F	92#105	Output	Output Speed Indicator	500 mAmp
G	92#164	Output	Sump Retarder Temperature Indicator	500 mAmp
H	92#162	Input	Service Brake Status Input	

Connector Number 5711 or 5713				
Cavity	Circuit Number	I/O	Function	Maximum Current
A	92#101	Input	Aux Function Range Inhibit	
B	92#117	Input	Automatic Neutral - Single Input	
C	92#103C		Signal Return	
D	92#143		PTO Drive Interface Input 1	
E	92#142	Input	Secondary Mode	
F	92#145	Output	Range Indicator	500 mAmp
G	92#130	Output	PTO Drive Interface 1 Output	500 mAmp
H	92#123	Input	Neutral at Stop	

Parts Associated with This Feature:

PART NUMBER	DESCRIPTION
80-WAY TRANSMISSION CONTROL MODULE	
3605713C1	80-WAY TCM CONNECTOR BODY (7500)

3606525C1	TCM CONNECTOR LOCK
3686945C1	WIRE TERMINAL 18-GAUGE
3606525C1	CONNECTOR PLUG
8-WAY CONNECTOR 7205 (CHASSIS HARNESS)	
3525872C1	8-WAY CONNECTOR BODY
3525873C1	CONNECTOR LOCK
1661875C1	WIRE TERMINAL 18-GAUGE
1661872C1	WIRE TERMINAL SEAL 18-GAUGE
2025431C1	CONNECTOR CAVITY PLUG
8-WAY MATING CONNECTOR FOR 7205 (BODY BUILDER HARNESS)	
3525874C1	8-WAY CONNECTOR BODY
3525873C1	CONNECTOR LOCK
1667742C1	WIRE TERMINAL 18-GAUGE
1661872C1	WIRE TERMINAL SEAL 18-GAUGE
2025431C1	CONNECTOR CAVITY PLUG
8-WAY CONNECTOR 7206 (CHASSIS HARNESS)	
3525874C1	8-WAY CONNECTOR BODY
3525875C1	CONNECTOR LOCK
1667742C1	WIRE TERMINAL 18-GAUGE
1661872C1	WIRE TERMINAL SEAL 18-GAUGE
2025431C1	CONNECTOR CAVITY PLUG
8-WAY MATING CONNECTOR FOR 7206 (BODY BUILDER HARNESS)	
3525872C1	8-WAY CONNECTOR BODY
3525875C1	CONNECTOR LOCK
1661875C1	WIRE TERMINAL 18-GAUGE
1661872C1	WIRE TERMINAL SEAL 18-GAUGE
2025431C1	CONNECTOR CAVITY PLUG

Parts Associated with Feature

How to Test This Feature:
Review this entry carefully and choose the transmission and optional electrical interface feature that is right for the particular equipment application. Reference Allison's software tool and chassis model circuit diagram manual as programming and diagnostic resource.

References:
Refer to the applicable International® Circuit Diagrams and Service Manuals.

Refer to the Allison Vocational Model Guide:

39. FEPTO/REPTO

Front Engine Power Take-Off (PTO) and Rear Engine Power Take-Off (PTO), also known as FEPTO/REPTO, are systems that draw power directly from the engine's crankshaft.

39.1. Non S13 Integrated FEPTO/REPTO

Feature Applicability to Vehicle Platforms:

- Line (LT)
- Regional Haul (RH)
- Heavy Vocational (HV)
- Heavy Extreme (HX) 2021 and Newer

FEPTO or REPTO support programming is accomplished with DLB.

BCM feature 597688 programming determines how the inputs are configured to support FEPTO, REPTO operation.

There is no connector interface provided for trucks with Non S13 Engines
The input will need to be wired to the BCM.

Extended Description: The feature provides REPTO/FEPTO engagement feedback to the BCM via a hardwired digital input. When REPTO/FEPTO is installed on the engine, feedback is provided to the BCM. For the engines supporting both REPTO and FEPTO, feedback is spliced from the PTOs.

System Block Diagram:

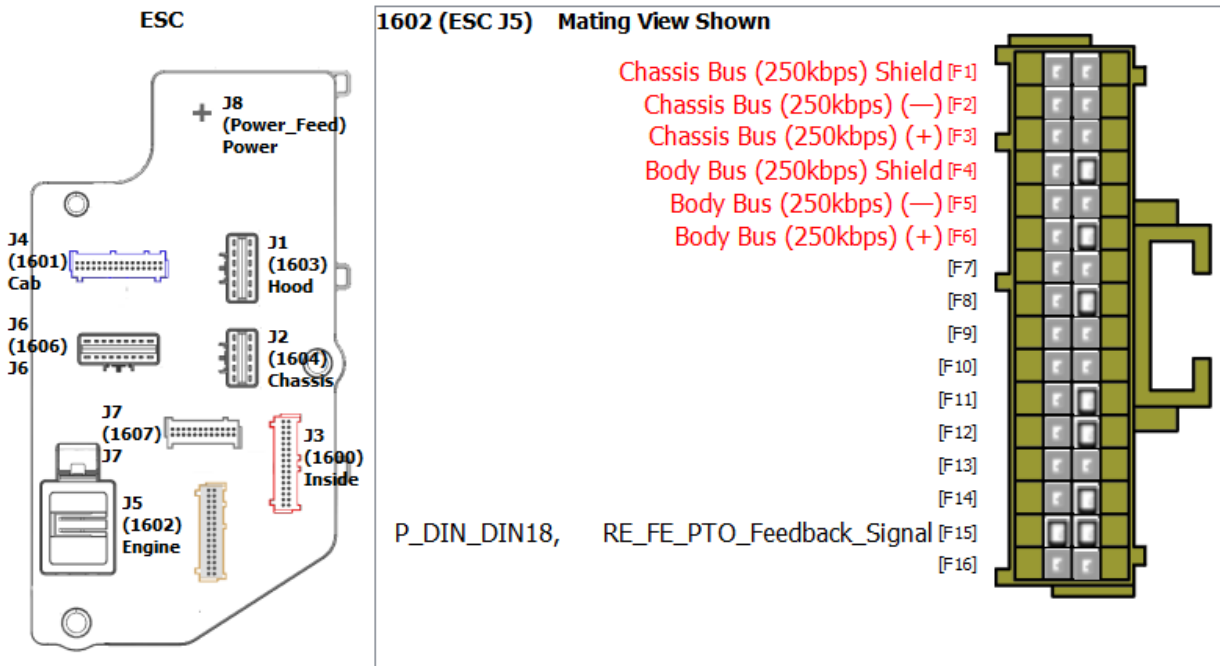

Body Controller Software Feature Codes:

- 597688 - BCM PROG, **FEPTO/REPTO message to TCM**

Parts Associated with This Feature:

PART NUMBER	DESCRIPTION
BODY CONTROL MODULE J6 CONNECTOR PARTS	
3544883C1	18-WAY BODY CONTROLLER J6 (1606/2023) CONNECTOR WIRE TERMINAL 20/22-GAUGE [GT150]

Parts Associated with Feature

How to Test This Feature:
The FEPTO and REPTO on the engine are always spinning. The TEM needs to provide the required controls and valves to control the devices being driven.

39.2. S13 Integrated FEPTO/REPTO

Feature Applicability to Vehicle Platforms:

- Line Haul (LT)
- Regional Haul (RH)
- Heavy Vocational (HV)
- Heavy Extreme (HX) 2021 and Newer

FEPTO or REPTO support programming, with DLB, is accomplished.

BCM feature 597688 programming determines how the inputs are configured to support the FEPTO, and REPTO.

Extended Description: The feature provides REPTO/FEPTO engagement feedback to the BCM via a hardwired digital input. When REPTO/FEPTO is installed on the engine, feedback is provided to the BCM. For the engines supporting both REPTO and FEPTO, feedback is spliced from the PTOs.
REPTO/FEPTO engagement feedback to the Transmission Control Module (TCM).

The body builder connector has a pin assigned to support the feedback for REPTO/FEPTO on S13 Engines

FEPTO or REPTO support programming, with SDS and DLB, is accomplished with combinations of BCM, ECM and TCM parameters.

TCM programming determines the PTO configuration for transmission PTOs, FEPTO, REPTO or Split Shaft.

BCM programming determines how the inputs are configured to support FEPTO, REPTO or Split Shaft PTOs.

PIM Programming supports engine and vehicle speed limits and accelerator pedal interaction while in PTO mode.

System Block Diagram:

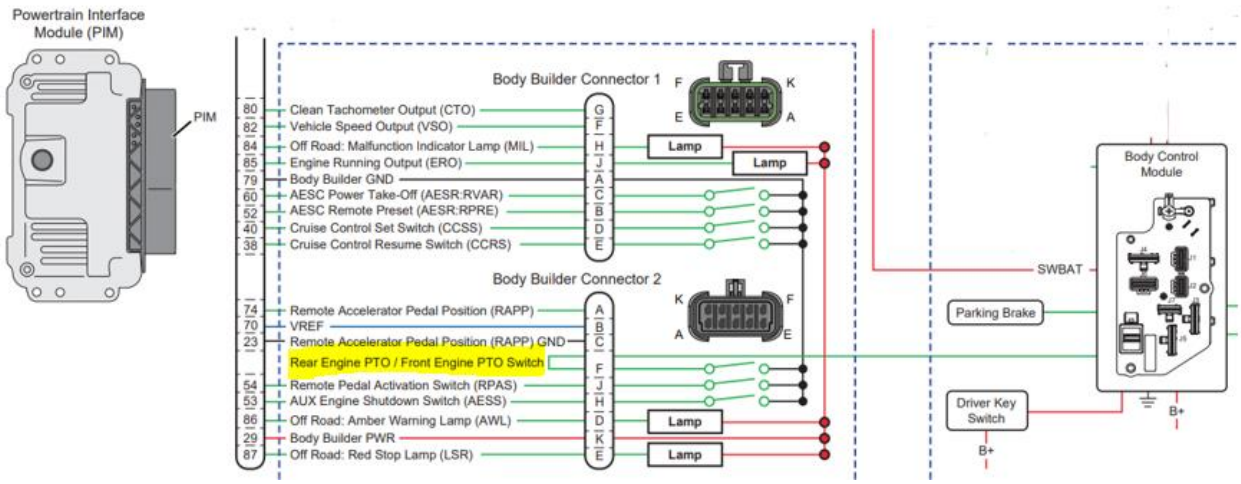

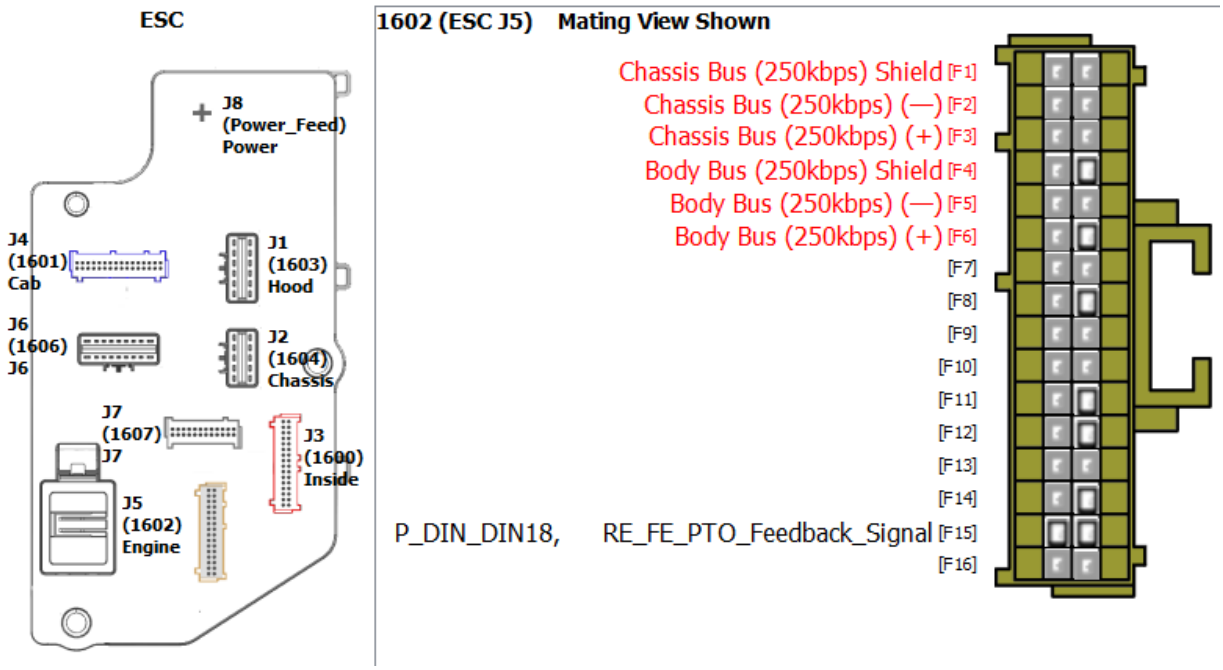

Body Controller Software Feature Codes:

- 597688 - BCM PROG, **FEPTO/REPTO message to TCM**

TCM Software Parameters:

Refer to the International® T14 (2023) Overview: Power Take Off (PTO) Parameters documentation.

CEM1 Controller Software Parameters:

Refer to the International® T14 (2023) Overview: Power Take Off (PTO) Parameters documentation.

Parts Associated with This Feature:

PART NUMBER	DESCRIPTION
10-WAY CONNECTOR 4705 (BODY BUILDER CONNECTOR 1)	
3538634C1	10-WAY CONNECTOR BODY
3538636C1	10-WAY CONNECTOR LOCK
1667742C1	WIRE TERMINAL 18-GAUGE
3568570C1	WIRE TERMINAL SEAL 18-GAUGE
2025431C1	CONNECTOR CAVITY PLUG
10-WAY MATING CONNECTOR FOR 4705C (BODY BUILDER CONNECTOR 2)	
3538635C1	10-WAY CONNECTOR
3538636C1	10-WAY CONNECTOR LOCK

1661875C1	WIRE TERMINAL 18-GAUGE
3568570C1	WIRE TERMINAL SEAL 18-GAUGE
2025431C1	CONNECTOR CAVITY PLUG
Note: 4705 and 4705C are mating connectors. If you do not have the required mating connector for body builder connector one or two, order the parts for the other connector.	
76-WAY CONNECTOR (THERMAL PROTECTION BARRIER PASS THROUGH)	
3574285C1	76-WAY CONNECTOR WIRE TERMINAL FEMALE 14-GUAGE
3574288C1	76-WAY CONNECTOR WIRE TERMINAL FEMALE 16-GUAGE
2003343C1	76-WAY CONNECTOR WIRE TERMINAL FEMALE 18-GUAGE
3549416C1	76-WAY CONNECTOR WIRE TERMINAL MALE 14-GUAGE
3549417C1	76-WAY CONNECTOR WIRE TERMINAL MALE 16-GUAGE
3549418C1	76-WAY CONNECTOR WIRE TERMINAL MALE 18-GUAGE
BODY CONTROL MODULE J6 CONNECTOR PARTS	
3544883C1	18-WAY BODY CONTROLLER J6 (1606/2023) CONNECTOR WIRE TERMINAL 20/22-GAUGE [GT150]

Parts Associated with Feature

How to Test This Feature:

The FEPTO and REPTO on the engine are always spinning. The TEM needs to provide the required controls and valves to control the devices being driven.

40. Auxiliary Transmission

13607 TRANSMISSION, AUXILIARY {Fuller AT-1202} 2-Speed with Air Shift Controls

Feature Applicability to Vehicle Platforms:

- Heavy Vocational (HV)
- Heavy Extreme (HX)

Extended Description:

Note: Transmission programming may need to accompany this feature.
Refer to the applicable transmission manual.

The auxiliary transmission is controlled by one dash mounted, tri-stable switch. The switch is labeled as follows:

- The up position is labeled “LO” → corresponds to the auxiliary transmission high or direct drive mode. When the switch is in this position, it is assumed that the operator has requested the vehicle be in **high gear**.

- The center position is labeled “N” → corresponds to the auxiliary transmission neutral mode. When the switch is in this position, it is assumed that the operator has requested the vehicle be in **neutral gear**.
- The down position is labeled “HI” → corresponds to the low or half-speed auxiliary transmission mode. When the switch is in this position, it is assumed that the operator has requested the vehicle be in **low gear**.

The Auxiliary transmission switch does NOT have an in-switch indicator.

The three air inputs to the Auxiliary Transmission are as follows:
- The high gear port.
- The neutral port
- The constant supply port.

Using these lines, the transmission can be put into one of three states:
- HIGH GEAR (DIRECT DRIVE) is achieved when air is supplied to the constant supply B port and the high gear C port.
- NEUTRAL is achieved when air is supplied to the constant supply B port and the A neutral port.
- LOW is achieved when air is supplied to only the constant supply, B port.

Other combinations of air supplied to the auxiliary transmission may cause unforeseeable behavior and shall not be allowed.

Feature 0597268: The auxiliary transmission system shall use three solenoids:
- Solenoid A shall be connected to the neutral port of the auxiliary transmission.
- Solenoid B shall be connected to the constant supply port of the auxiliary transmission.
- Solenoid C shall be connected to the high gear port of the auxiliary transmission.

  All three of these solenoids are normally closed solenoids. E.g., they supply air when power is applied.

Shifting of the Auxiliary Transmission shall be allowed when the key is in any position other than the OFF position. This includes shifting from any state into any other state.

Shorted Air Solenoids

If any of the three solenoids are detected as being shorted to ground (status of 1), the logic shall turn off the air solenoid power if it is currently commanded on. This is to prevent damage to the module in the event of a short. The logic will check the state of the air solenoid power FET before commanding it off to ensure that the FET is not turned off, inadvertently, at key cycle before the logic has determined whether or not a

solenoid is actually shorted. When the air solenoid power FET is turned off, all three of the auxiliary transmission solenoids will be simultaneously un-powered.

Bad Status on Aux Transmission Switch

If a bad status on the aux transmission switch is detected, the feature shall un-power all three of the solenoids.

System Block Diagram:

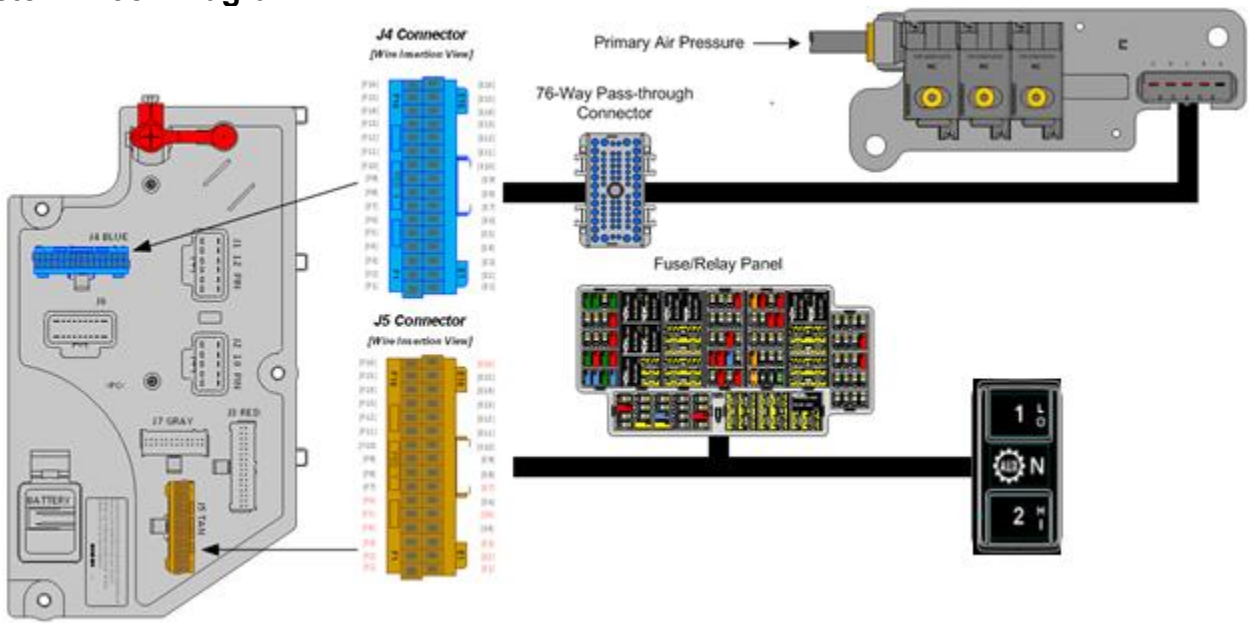

Parts Associated with This Feature:

PART NUMBER	DESCRIPTION
MULTIPLEX SWITCH-PACK PARTS	
4057689C1	HOUSING, SWITCH 6-PACK DIN MULTIPLEX
3766096C1	SWITCH, AUXILIARY TRANSMISSION 3-POSITION LATCHING
AIR SOLENOID 4-PACK PARTS	
2506711C91	KIT AIR UNIVERSAL SOLENOID (NORMALLY CLOSED)
2505594C1	4-PACK AIR SOLENOID BASE
1661375C2	4-PACK AIR SOLENOID BASE 5-CAVITY CONNECTOR
1661376C1	4-PACK AIR SOLENOID BASE 5-CAVITY CONNECTOR LOCK
2033816C1	4-PACK AIR SOLENOID WIRE TERMINAL 14-GAUGE
2033819C1	4-PACK AIR SOLENOID WIRE TERMINAL 18-GAUGE
0589391C1	4-PACK AIR SOLENOID WIRE TERMINAL SEAL 14-GAUGE
2607909C1	4-PACK AIR SOLENOID WIRE TERMINAL SEAL 18-GAUGE
76-WAY CONNECTOR (THERMAL PROTECTION BARRIER PASS THROUGH)	

3574285C1	76-WAY CONNECTOR WIRE TERMINAL FEMALE 14-GUAGE
3574288C1	76-WAY CONNECTOR WIRE TERMINAL FEMALE 16-GUAGE
2003343C1	76-WAY CONNECTOR WIRE TERMINAL FEMALE 18-GUAGE
3549416C1	76-WAY CONNECTOR WIRE TERMINAL MALE 14-GUAGE
3549417C1	76-WAY CONNECTOR WIRE TERMINAL MALE 16-GUAGE
3549418C1	76-WAY CONNECTOR WIRE TERMINAL MALE 18-GUAGE
BODY CONTROL MODULE J5 CONNECTOR PARTS	
3522073C1	32-WAY BODY CONTROLLER J5 (1601/1602) CONNECTOR WIRE TERMINAL 18/20-GAUGE
3534303C1	32-WAY BODY CONTROLLER J5 (1601/1602) CONNECTOR WIRE TERMINAL 20/22-GAUGE

Part Numbers Associate with Feature

How to Test This Feature:
1. Turn the Ignition (IGN) key to the RUN position, with the vehicle stationary.
2. Press the Auxiliary Transmission switch to each position. Note that the Auxiliary Transmission shifts accordingly.

Note: This feature uses body controller-based software controls which can be diagnosed with The International® Diamond Logic® Builder software (see local dealer if not owned).

References:
Refer to the applicable International® Circuit Diagrams and Service Manuals.

41. Work Light and Outside Cab Power Features

41.1. 08TMH: SWITCH, AUXILIARY Accessory Control; for Wiring in Roof, With Maximum of 20 AMP Load with Switches in the Instrument Panel.

Feature Applicability to Vehicle Platforms:

- Heavy Vocational (HV)
- Medium Vocational (MV)
- Heavy Extreme (HX) 2021 and Newer

Extended Description: This feature consists of a switch mounted in the center panel with wiring that is routed up the right “A” pillar. The circuit is protected with a 20-AMP fuse.

System Block Diagram:

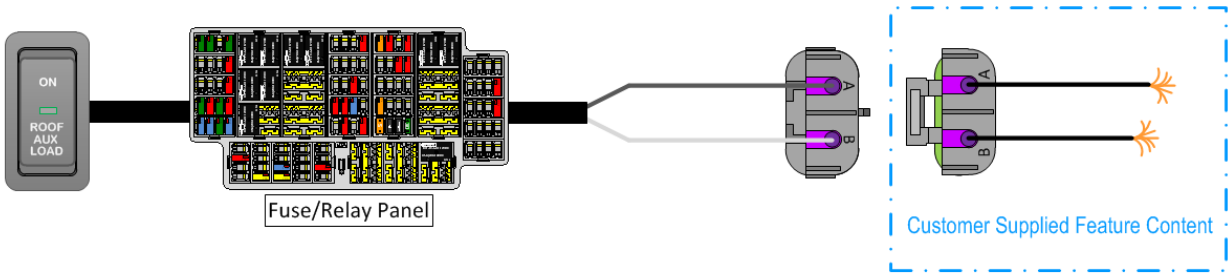

Parts Associated with This Feature:

PART NUMBER	DESCRIPTION
3766658C1	SWITCH, ROOF AUX LOAD
AUXILIARY PWR SOURCE (CHASSIS HARNESS CONNECTOR PARTS)	
0587567C91	2-WAY CONNECTOR BODY
1673748C1	WIRE TERMINAL 12-GAUGE
0587577C1	WIRE TERMINAL 14/16-GAUGE
0589391C1	WIRE TERMINAL SEAL 12-GAUGE
1667735C1	WIRE TERMINAL SEAL 14/16-GAUGE
AUXILIARY PWR SOURCE (BODY BUILDER HARNESS CONNECTOR PARTS)	
0587568C91	2-WAY CONNECTOR BODY (DELPHI WEATHERPACK SEALED 2.6MM FEM 2W 20 AMPS)
1673747C1	WIRE TERMINAL 16-GAUGE (DELPHI WEATHERPACK 2.6MM MALE 12 AWG)
0587575C1	WIRE TERMINAL 16-GAUGE (DELPHI WEATHERPACK 2.6MM MALE 16-14 AWG)
0589391C1	WIRE TERMINAL 12-GUAGE (DELPHI BLUE 1W CAVITY SEAL PN:15324996)
1667735C1	WIRE TERMINAL 16-GUAGE (DELPHI BLUE 1W CAVITY SEAL PN:15324996)

Part Numbers Associated with Auxiliary Load Feature

How to Test This Feature:
1. Turn on in-cab switch.
2. Verify that the added feature operates.
3. Verify that the feed wire is receiving battery voltage.

References:
Refer to the applicable International® Circuit Diagrams and Service Manuals.

41.2. 08WEX: AUXILIARY HARNESS for Auxiliary Power Source; 30-Amp, Key Switched, 2-Pin Connector, Located on Floor Between Seats.

- **Feature Applicability to Vehicle Platforms:** Heavy Extreme (HX) 2021 and Newer

Extended Description: This feature consists of an ignition key switched wiring that is routed up the right “A” pillar to the back of cab to a coil that when stretched out can reach between the seats. The circuit is protected with a 30-AMP fuse. This feature is only available on the HX models.

System Block Diagram:

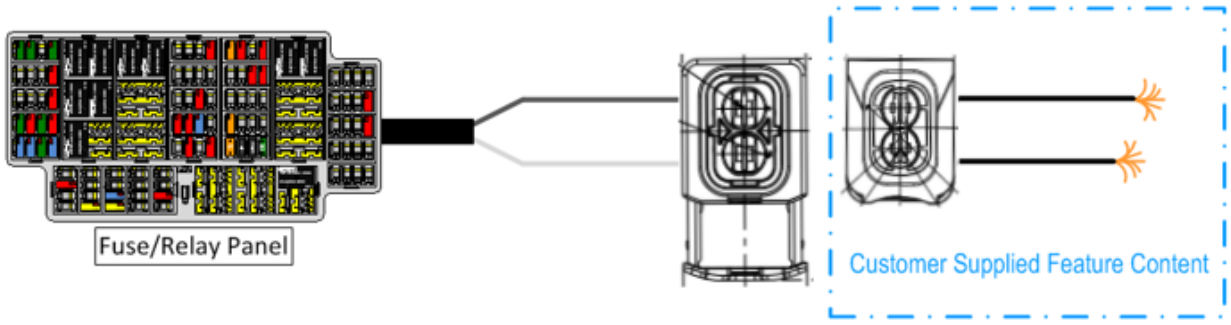

Parts Associated with This Feature:

PART NUMBER	DESCRIPTION
AUXILIARY PWR SOURCE (CHASSIS HARNESS CONNECTOR PARTS)	
4110038C1	2-WAY CONNECTOR BODY
	WIRE TERMINAL
	SEAL
AUXILIARY PWR SOURCE (BODY BUILDER HARNESS CONNECTOR PARTS)	
4115742C1	2-WAY CONNECTOR BODY
4231667C1	WIRE TERMINAL)
6113346C1	SEAL

Terminal Part Numbers Needed to Connect to Feature

How to Test This Feature:
1. Turn on ignition switch.
2. Verify that the added feature operates.
3. Verify that the feed wire is receiving battery voltage.

Note: This feature uses body controller-based software controls which can be diagnosed with International's Diamond Logic® Builder software (see local dealer if not owned).

References:
Refer to the applicable International® Circuit Diagrams and Service Manuals.

41.3. 08WGV: WORK LIGHT WIRING for (2) Customer Installed Work Lights, Mounted on Top Rear Corners of Cab, with Switch on Dash, Switch Will Also Activate Standard Work Light

Feature Applicability to Vehicle Platforms:
- Line Haul Transport (LT)
- Regional Haul (RH)
- Heavy Extreme (HX) 2021 and Newer

Extended Description: This feature includes a switch in the Instrument Panel (IP). The switch will illuminate when the switch is on. The feature provides an output from the Body Controller (BCM) and provides wiring to the back of cab which includes power and ground. This can be used to satisfy any number of electrical needs such as lights inside dry van boxes, small pumps, and illumination to aid in various job functions.
If the engine is off, there is a time out parameter, which is factory set at 120-minutes. If the vehicle is running, the work light will not time out. If the work light is left on when the vehicle is moving, the work light will turn off when the vehicle speed exceeds the work light off-speed parameter. This parameter is factory set at 2-MPH. Both parameters can be changed through the Diamond Logic® Builder software.

System Block Diagram:

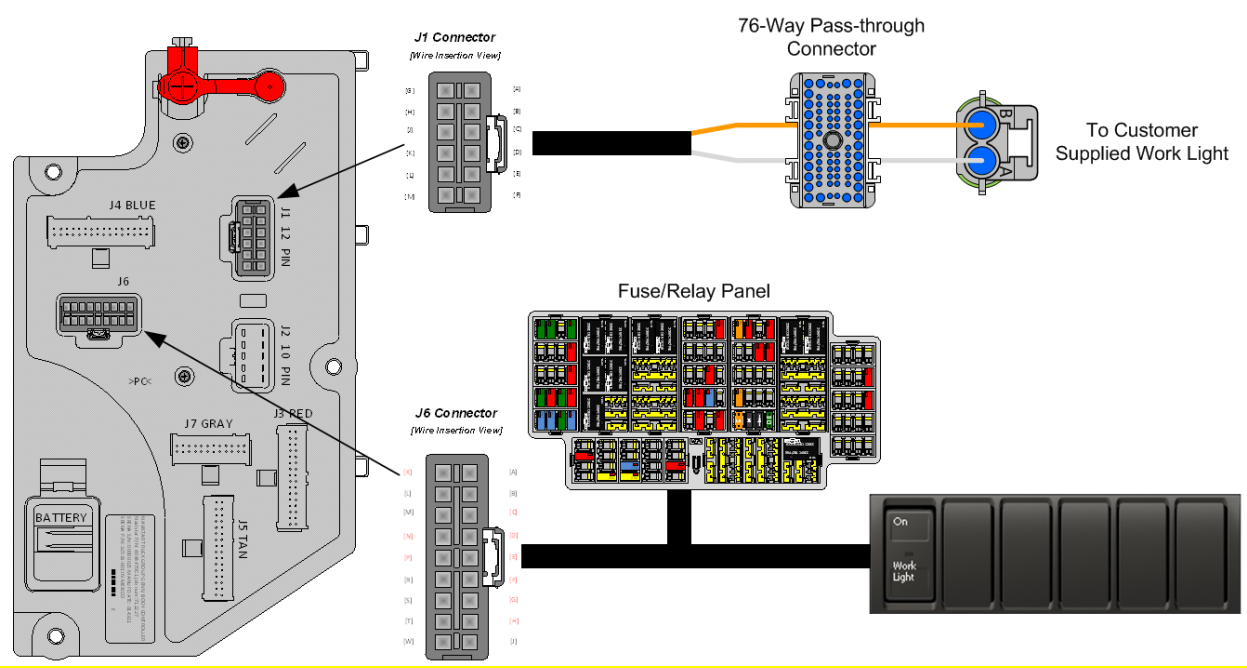

Body Controller Software Feature Codes:

- 597008 - BCM PROG, WORK LIGHT Rocker Switch
  - (If there is the desire to turn off the work light feature's diagnostics each parameter setting will need to be set to zero).

Body Controller Software Feature Code Parameters:

Parameter	ID	Description	Default	Units	Min	Max	Step
Work_Light_Hi_ Current	1899	Work Light High Current Detection Level (Amps)	10	A	0	10	0.1
Work_Light_Lo_ Current	1898	Work Light Low Current Detection Level (Amps)	0.5	A	0	10	0.1
Work_Light_OC_ Current	1900	Work Light Open Circuit Detection Level (Amps)	0.5	A	0	10	0.1
Work_Light_Off_ Speed	2568	This parameter is required to turn off the work light if the vehicle's speed is greater than the work light off-speed parameter	2	Mph	1	90	2
Work_Light_Tim eout_Enable	640	This parameter sets the amount of time that the work light will remain on after the ignition is turned to off.	2	Hours	0.16	24	0.16

Parameter Definitions:

- **Work_Light_Hi_Current** - If the current in the work light circuit exceeds the level set by this parameter, the Body Controller (BCM) will shut off the circuit and register a fault code.

- **Work_Light_Lo_Current** - If the current in the work light circuit falls below the level set by this parameter, the Body Controller (BCM) will register a fault code.

- **Work_Light_OC_Current** - This parameter should be left at its factory default of zero.

- **Work_Light_Off_Speed** – This is a programmable parameter for vehicle speed. Once this value is achieved the body controller will turn off the work light.

- **Work_Light_Timeout_Enable** – This parameter is used to set the amount of time that the customer desires the work light to remain on after the IGN key is turned off. This parameter is for customers who desire to have their work light. time out after a specified length of time so that the light does not drain the battery(s) in case the operator forgets to turn the work light off.

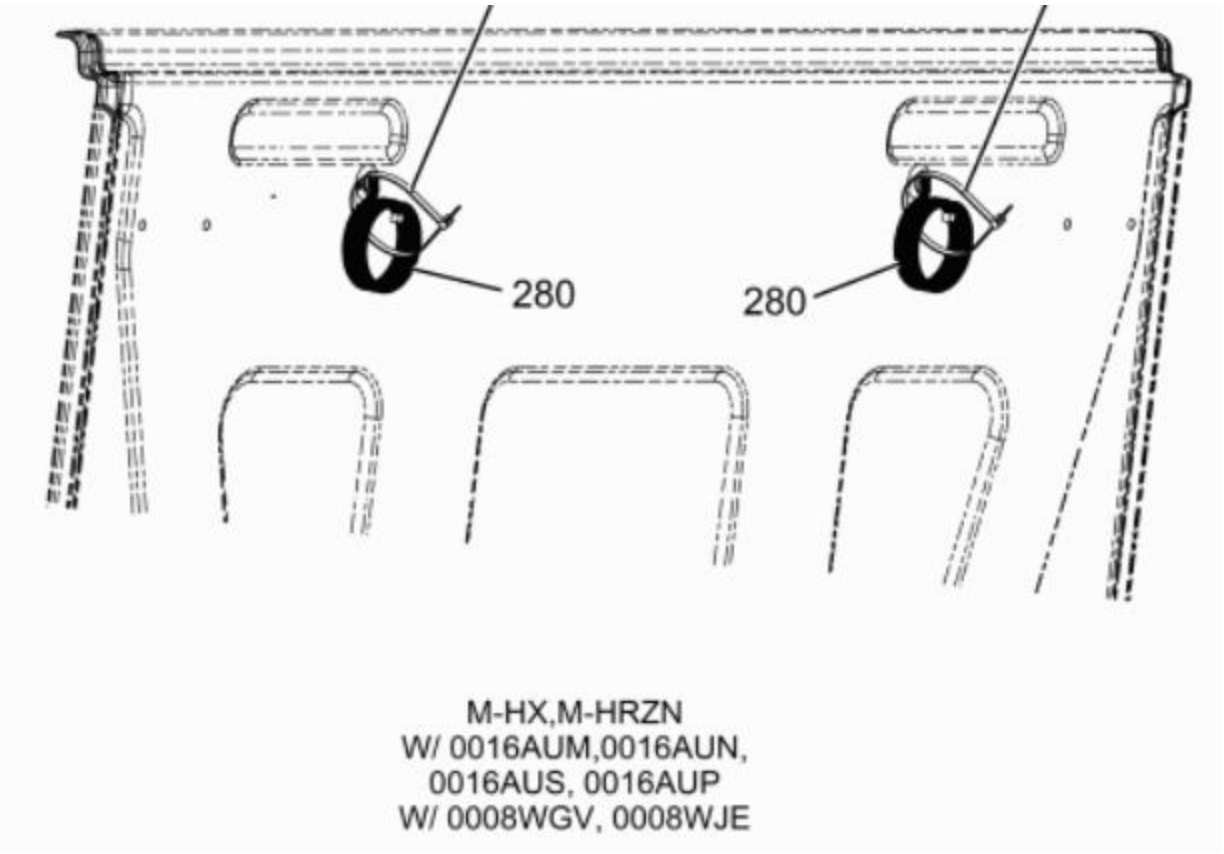

Arrow Indicates Location of Work Light Connector (Straight Truck)

Parts Associated with This Feature:

PART NUMBER	DESCRIPTION
MULTIPLEX SWITCH-PACK PARTS	
4057689C4	HOUSING, SWITCH 6-PACK DIN MULTIPLEX
4102405C1	POSITION 3-POSITION MONOSTABLE “MOMENTARY” WORK LIGHT SWITCH ACTUATOR
WORK LIGHT CONNECTOR (CHASSIS HARNESS)	
1661778C1	2-WAY CONNECTOR BODY
1661875C1	WIRE TERMINAL 16-GAUGE
1661874C1	CONNECTOR LOCK
1661872C1	WIRE TERMINAL SEAL 16-GAUGE
WORK LIGHT MATING CONNECTOR (CHASSIS HARNESS)	
3543888C1	2-WAY CONNECTOR BODY
1661874C1	CONNECTOR LOCK
1667742C1	WIRE TERMINAL 16-GUAGE
1661872C1	WIRE TERMINAL SEAL 16-GAUGE
BODY CONTROL MODULE J1/J6 CONNECTOR PARTS	
3598711C1	12-WAY CONNECTOR BODY J1 (1603)
3573833C1	12-WAY CONNECTOR LOCK J1 (1603)

3544878C1	WIRE TERMINAL 12/14-GAUGE J1 (1603)
3544877C1	WIRE TERMINAL 14/16-GAUGE J1 (1603)
3544876C1	WIRE TERMINAL 16/18-GAUGE J1 (1603)
3544875C1	WIRE TERMINAL 18/20-GAUGE J1 (1603)
3544878C1	18-WAY BODY CONTROLLER J6 (1606/2023) CONNECTOR WIRE TERMINAL 12-14-GAUGE [GT280]
3544877C1	18-WAY BODY CONTROLLER J6 (1606/2023) CONNECTOR WIRE TERMINAL 14/16-GAUGE [GT280]
3544876C1	18-WAY BODY CONTROLLER J6 (1606/2023) CONNECTOR WIRE TERMINAL 16/18-GAUGE [GT280]
3544875C1	18-WAY BODY CONTROLLER J6 (1606/2023) CONNECTOR WIRE TERMINAL 18/20-GAUGE [GT280]
3544884C1	18-WAY BODY CONTROLLER J6 (1606/2023) CONNECTOR WIRE TERMINAL 16/18-GAUGE [GT150]
3544883C1	18-WAY BODY CONTROLLER J6 (1606/2023) CONNECTOR WIRE TERMINAL 20/22-GAUGE [GT150]

Parts Required to Connect to Work Light Cable

How to Test This Feature:
1. Activate work light switch.
2. Verify that pin G (labeled Work Light) on the Body Controller (BCM) connector (#1603) is providing battery voltage.
3. Verify that the work light (or alternate load) is functioning properly.
4. Turn work light switch OFF.
5. Verify that the work light output goes OFF.

Note: This feature uses body controller-based software controls which can be diagnosed with International's Diamond Logic® Builder software (see local dealer if not owned).

References:
Refer to the applicable International® Circuit Diagrams and Service Manuals

41.4. 08WJE: WORK LIGHT WIRING for (2) Customer Installed Work Lights, Mounted on Top Rear Corners of Cab, with Switch on Dash, Switch Will Also Activate Standard Work Light and Backup Lights when Vehicle is in Reverse or Park Brake Applied.

Feature Applicability to Vehicle Platforms:
- Line Haul Transport (LT)
- Regional Haul (RH)
- Heavy Extreme (HX) 2021 and Newer

Extended Description: This feature includes a switch in the Instrument Panel (IP). The switch will illuminate when the switch is on. The feature provides an output from the Body Controller (BCM) and provides wiring to the back of cab which includes power and ground. This can be used to satisfy any number of electrical needs such as lights inside dry van boxes, small pumps, and illumination to aid in various job functions.
If the engine is off, there is a time out parameter, which is factory set at 120-minutes. If the vehicle is running, the work light will not time out. If the work light is left on when the vehicle is moving, the work light will turn off when the vehicle speed exceeds the work light off-speed parameter. This parameter is factory set at 2-MPH. Both parameters can be changed through the Diamond Logic® Builder software.

System Block Diagram:

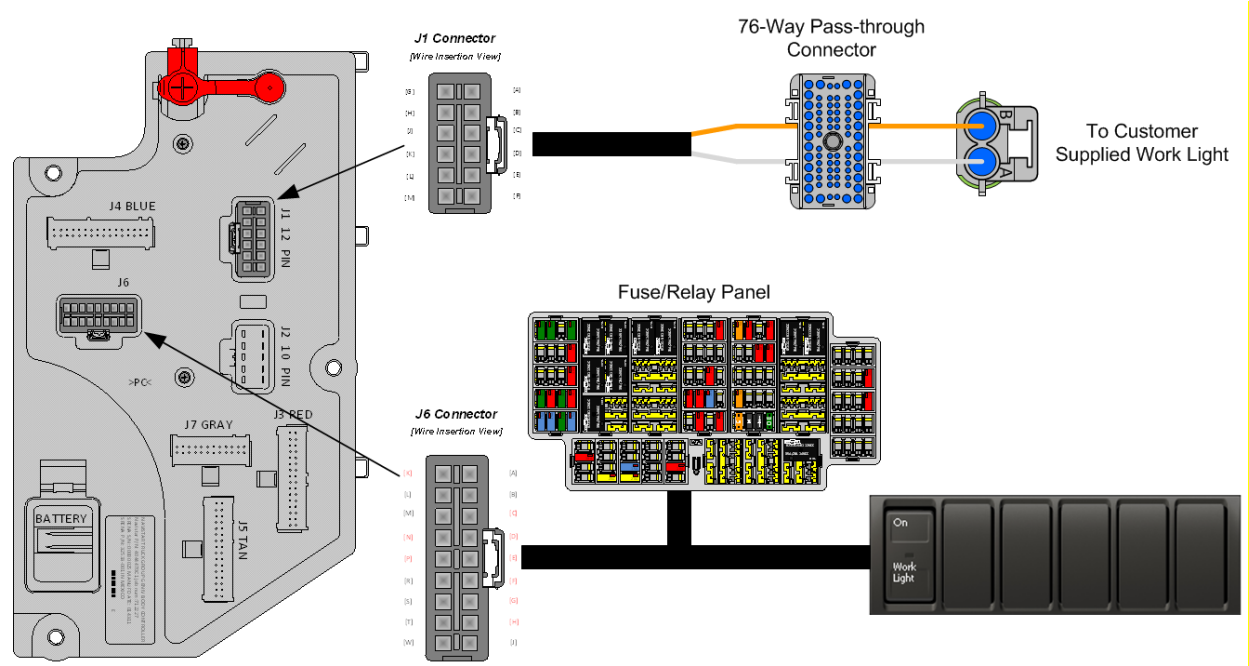

Body Controller Software Feature Codes:

- 597008 - BCM PROG, WORK LIGHT Rocker Switch
  - (If there is the desire to turn off the work light feature's diagnostics each parameter setting will need to be set to zero).
- 597084 - BCM PROG, WORK LIGHT ON W/BACKUP

Body Controller Software Feature Code Parameters:

Parameter	ID	Description	Default	Units	Min	Max	Step
Work_Light_Hi_ Current	1899	Work Light High Current Detection Level (Amps)	10	A	0	10	0.1
Work_Light_Lo_ Current	1898	Work light Low Current Detection Level (Amps)	0.5	A	0	10	0.1
Work_Light_OC_ Current	1900	Work Light Open Circuit Detection Level (Amps)	0.5	A	0	10	0.1
Work_Light_Off_ Speed	2568	This parameter is required to turn off the work light if the vehicle's speed is greater than the work light off-speed parameter	2	Mph	1	90	2
Work_Light_Tim eout_Enable	640	This parameter sets the amount of time that the work light will remain on after the ignition is turned to off.	2	Hours	0.16	24	0.16

Parameter Definitions:

- **Work_Light_Hi_Current** - If the current in the work light circuit exceeds the level set by this parameter, the Body Controller (BCM) will shut off the circuit and register a fault code.

- **Work_Light_Lo_Current** - If the current in the work light circuit falls below the level set by this parameter, the Body Controller (BCM) will register a fault code.

- **Work_Light_OC_Current** - This parameter should be left at its factory default of zero.

- **Work_Light_Off_Speed** – This is a programmable parameter for vehicle speed. Once this value is achieved the body controller will turn off the work light.

- **Work_Light_Timeout_Enable** – This parameter is used to set the amount of time that the customer desires the work light to remain on after the IGN key is turned off. This parameter is for customers who desire to have their work light. time out after a specified length of time so that the light does not drain the battery(s) in case the operator forgets to turn the work light off.

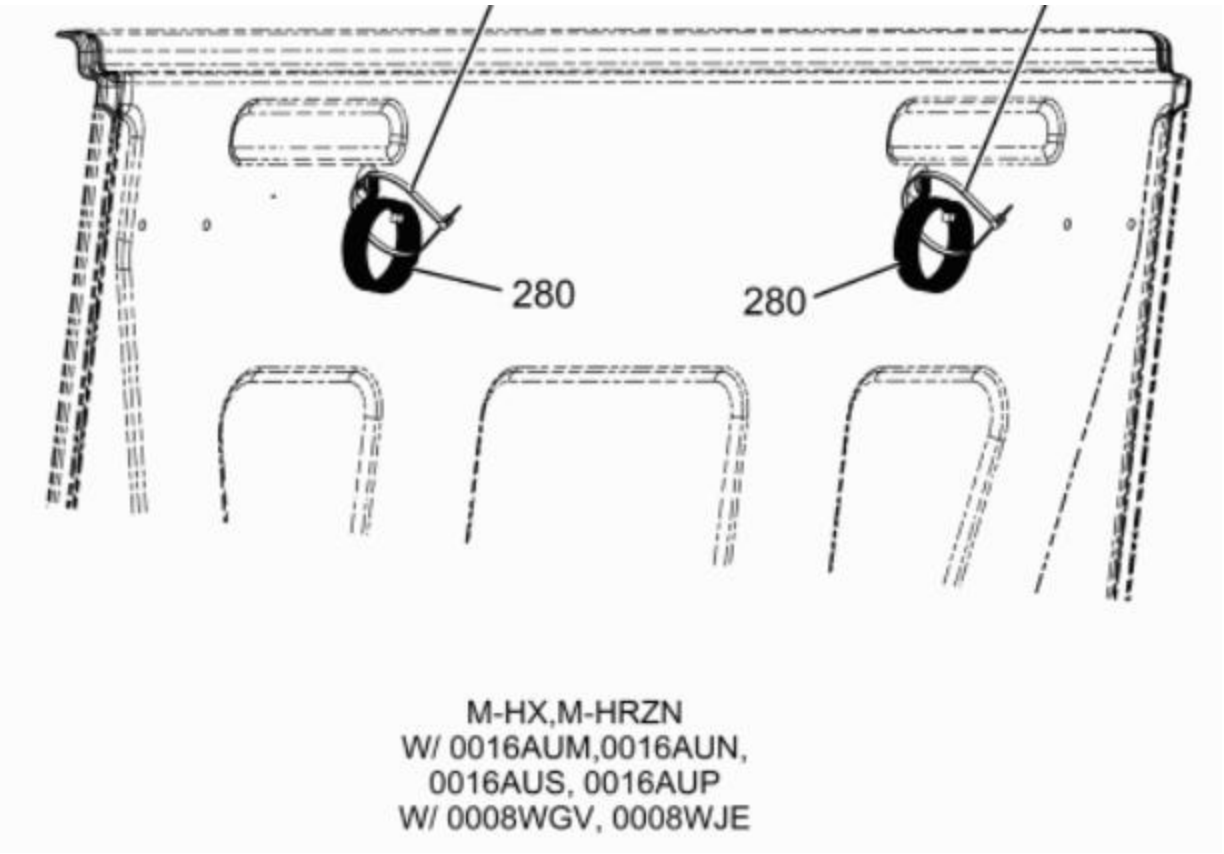

Arrow Indicates Location of Work Light Connector (Straight Truck)

Parts Associated with This Feature:

PART NUMBER	DESCRIPTION
MULTIPLEX SWITCH-PACK PARTS	
4057689C4	HOUSING, SWITCH 6-PACK DIN MULTIPLEX
4102405C1	POSITION 3-POSITION MONOSTABLE “MOMENTARY” WORK LIGHT SWITCH ACTUATOR
WORK LIGHT CONNECTOR (CHASSIS HARNESS)	
1661778C1	2-WAY CONNECTOR BODY
1661875C1	WIRE TERMINAL 16-GAUGE
1661874C1	CONNECTOR LOCK
1661872C1	WIRE TERMINAL SEAL 16-GAUGE
WORK LIGHT MATING CONNECTOR (CHASSIS HARNESS)	
3543888C1	2-WAY CONNECTOR BODY
1661874C1	CONNECTOR LOCK
1667742C1	WIRE TERMINAL 16-GUAGE
1661872C1	WIRE TERMINAL SEAL 16-GAUGE
BODY CONTROL MODULE J1/J6 CONNECTOR PARTS	
3598711C1	12-WAY CONNECTOR BODY J1 (1603)
3573833C1	12-WAY CONNECTOR LOCK J1 (1603)

3544878C1	WIRE TERMINAL 12/14-GAUGE J1 (1603)
3544877C1	WIRE TERMINAL 14/16-GAUGE J1 (1603)
3544876C1	WIRE TERMINAL 16/18-GAUGE J1 (1603)
3544875C1	WIRE TERMINAL 18/20-GAUGE J1 (1603)
3544878C1	18-WAY BODY CONTROLLER J6 (1606/2023) CONNECTOR WIRE TERMINAL 12-14-GAUGE [GT280]
3544877C1	18-WAY BODY CONTROLLER J6 (1606/2023) CONNECTOR WIRE TERMINAL 14/16-GAUGE [GT280]
3544876C1	18-WAY BODY CONTROLLER J6 (1606/2023) CONNECTOR WIRE TERMINAL 16/18-GAUGE [GT280]
3544875C1	18-WAY BODY CONTROLLER J6 (1606/2023) CONNECTOR WIRE TERMINAL 18/20-GAUGE [GT280]
3544884C1	18-WAY BODY CONTROLLER J6 (1606/2023) CONNECTOR WIRE TERMINAL 16/18-GAUGE [GT150]
3544883C1	18-WAY BODY CONTROLLER J6 (1606/2023) CONNECTOR WIRE TERMINAL 20/22-GAUGE [GT150]

Parts Required to Connect to Work Light Cable

How to Test This Feature:
1. Activate work light switch.
2. Verify that pin G (labeled Work Light) on the Body Controller (BCM) connector (#1603) is providing battery voltage.
3. Verify that the work light (or alternate load) is functioning properly.
4. Turn work light switch OFF.
5. Verify that the work light output goes OFF.
6. Put vehicle in reverse.
7. Verify that pin G (labeled Work Light) on the Body Controller (BCM) connector (#1603) is providing battery voltage.
8. Verify that the work light (or alternate load) is functioning properly.
9. Put vehicle in neutral.
10. Verify that the work light output goes OFF.

Note: This feature uses body controller-based software controls which can be diagnosed with International's Diamond Logic® Builder software (see local dealer if not owned).

References:
Refer to the applicable International® Circuit Diagrams and Service Manuals

41.5. 08WJZ: WORKLIGHT ON W/BACKUP Work Lights will Activate when Vehicle is in Reverse

Feature Applicability to Vehicle Platforms:
- Heavy Vocational (HV**)**
- Heavy Extreme (HX) 2021 and Newer

Extended Description: This feature will activate the work light when the BCM senses that the vehicle is in reverse gear. It must be configured with the Work Light Switch Feature 08WTT.

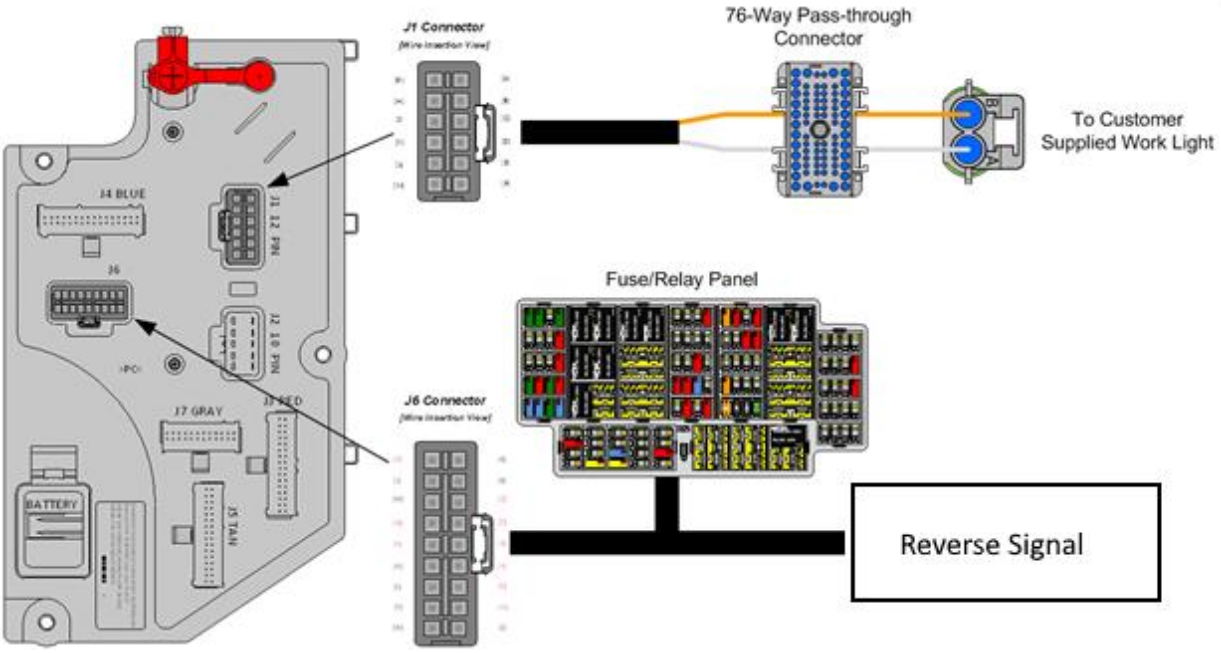

Body Controller Software Feature Codes:

0597084 BCM PROG, WORKLIGHT ON W/BACKUP

Parts Associated with This Feature:

PART NUMBER	DESCRIPTION
MULTIPLEX SWITCH-PACK PARTS	
4057689C4	HOUSING, SWITCH 6-PACK DIN MULTIPLEX
4102405C1	POSITION 3-POSITION MONOSTABLE “MOMENTARY” WORK LIGHT SWITCH ACTUATOR
WORK LIGHT CONNECTOR (CHASSIS HARNESS)	
1661778C1	2-WAY CONNECTOR BODY
1661875C1	WIRE TERMINAL 16-GAUGE
1661874C1	CONNECTOR LOCK
1661872C1	WIRE TERMINAL SEAL 16-GAUGE
WORK LIGHT MATING CONNECTOR (CHASSIS HARNESS)	
3543888C1	2-WAY CONNECTOR BODY
1661874C1	CONNECTOR LOCK
1667742C1	WIRE TERMINAL 16-GUAGE
1661872C1	WIRE TERMINAL SEAL 16-GAUGE
BODY CONTROL MODULE J1/J6 CONNECTOR PARTS	
3598711C1	12-WAY CONNECTOR BODY J1 (1603)
3573833C1	12-WAY CONNECTOR LOCK J1 (1603)
3544878C1	WIRE TERMINAL 12/14-GAUGE J1 (1603)
3544877C1	WIRE TERMINAL 14/16-GAUGE J1 (1603)
3544876C1	WIRE TERMINAL 16/18-GAUGE J1 (1603)
3544875C1	WIRE TERMINAL 18/20-GAUGE J1 (1603)
3544878C1	18-WAY BODY CONTROLLER J6 (1606/2023) CONNECTOR WIRE TERMINAL 12-14-GAUGE [GT280]
3544877C1	18-WAY BODY CONTROLLER J6 (1606/2023) CONNECTOR WIRE TERMINAL 14/16-GAUGE [GT280]
3544876C1	18-WAY BODY CONTROLLER J6 (1606/2023) CONNECTOR WIRE TERMINAL 16/18-GAUGE [GT280]
3544875C1	18-WAY BODY CONTROLLER J6 (1606/2023) CONNECTOR WIRE TERMINAL 18/20-GAUGE [GT280]
3544884C1	18-WAY BODY CONTROLLER J6 (1606/2023) CONNECTOR WIRE TERMINAL 16/18-GAUGE [GT150]
3544883C1	18-WAY BODY CONTROLLER J6 (1606/2023) CONNECTOR WIRE TERMINAL 20/22-GAUGE [GT150]

Parts Required to Connect to Work Light Cable

How to Test This Feature:

1. Put vehicle in reverse.
2. Verify that pin G (labeled Work Light) on the Body Controller (BCM) connector (#1603) is providing battery voltage.
3. Verify that the work light (or alternate load) is functioning properly.
4. Put vehicle in neutral.
5. Verify that the work light output goes OFF.

Note: This feature uses body controller-based software controls which can be diagnosed with International's Diamond Logic® Builder software (see local dealer if not owned).

References:
Refer to the applicable International® Circuit Diagrams and Service Manuals

41.6. 08WTT: SWITCH, TOGGLE, FOR WORK LIGHT Lighted; on Instrument Panel and Wiring Effects for Customer Furnished End of Frame Light

Feature Applicability to Vehicle Platforms:

- Heavy Vocational (HV**)**
- Heavy Extreme (HX) 2021 and Newer

Extended Description: This feature includes a switch in the Instrument Panel (IP). The switch will illuminate when the switch is on. The feature provides an output from the Body Controller (BCM) and provides wiring to the back of cab which includes power and ground. This can be used to satisfy any number of electrical needs such as lights inside dry van boxes, small pumps, and illumination to aid in various job functions.
If the engine is off, there is a time out parameter, which is factory set at 120-minutes. If the vehicle is running, the work light will not time out. If the work light is left on when the vehicle is moving, the work light will turn off when the vehicle speed exceeds the work light off-speed parameter. This parameter is factory set at 2-MPH. Both parameters can be changed through the Diamond Logic® Builder software.

System Block Diagram:

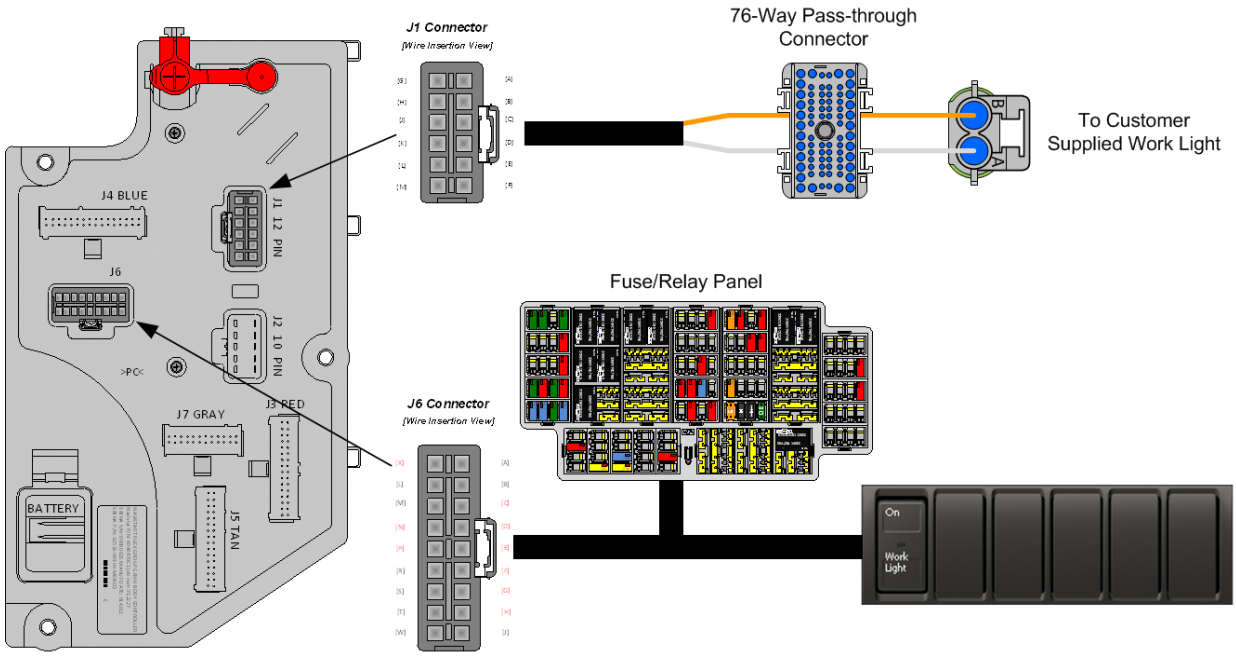

Body Controller Software Feature Codes:

- 597008 - BCM PROG, WORK LIGHT Rocker Switch
    - (If there is the desire to turn off the work light feature's diagnostics each parameter setting will need to be set to zero).

Body Controller Software Feature Code Parameters:

Parameter	ID	Description	Default	Units	Min	Max	Step
Work_Light_Hi_ Current	1899	Work Light High Current Detection Level (Amps)	10	A	0	10	0.1
Work_Light_Lo_ Current	1898	Work light Low Current Detection Level (Amps)	0.5	A	0	10	0.1
Work_Light_OC_ Current	1900	Work Light Open Circuit Detection Level (Amps)	0.5	A	0	10	0.1
Work_Light_Off_ Speed	2568	This parameter is required to turn off the work light if the vehicle's speed is greater than the work light off-speed parameter	2	Mph	1	90	2
Work_Light_Tim eout_Enable	640	This parameter sets the amount of time that the work light will remain on after the ignition is turned to off.	2	Hours	0.16	24	0.16

Parameter Definitions:

- **Work_Light_Hi_Current** - If the current in the work light circuit exceeds the level set by this parameter, the Body Controller (BCM) will shut off the circuit and register a fault code.

- **Work_Light_Lo_Current** - If the current in the work light circuit falls below the level set by this parameter, the Body Controller (BCM) will register a fault code.

- **Work_Light_OC_Current** - This parameter should be left at its factory default of zero.

- **Work_Light_Off_Speed** – This is a programmable parameter for vehicle speed. Once this value is achieved the body controller will turn off the work light.

- **Work_Light_Timeout_Enable** – This parameter is used to set the amount of time that the customer desires the work light to remain on after the IGN key is turned off. This parameter is for customers who desire to have their work light. time out after a specified length of time so that the light does not drain the battery(s) in case the operator forgets to turn the work light off.



Arrow Indicates Location of Work Light Connector (Straight Truck)

Parts Associated with This Feature:

PART NUMBER	DESCRIPTION
MULTIPLEX SWITCH-PACK PARTS	
4057689C4	HOUSING, SWITCH 6-PACK DIN MULTIPLEX
4102405C1	POSITION 3-POSITION MONOSTABLE “MOMENTARY” WORK LIGHT SWITCH ACTUATOR
WORK LIGHT CONNECTOR (CHASSIS HARNESS)	
1661778C1	2-WAY CONNECTOR BODY
1661875C1	WIRE TERMINAL 16-GAUGE
1661874C1	CONNECTOR LOCK
1661872C1	WIRE TERMINAL SEAL 16-GAUGE
WORK LIGHT MATING CONNECTOR (CHASSIS HARNESS)	
3543888C1	2-WAY CONNECTOR BODY
1661874C1	CONNECTOR LOCK
1667742C1	WIRE TERMINAL 16-GUAGE
1661872C1	WIRE TERMINAL SEAL 16-GAUGE
BODY CONTROL MODULE J1/J6 CONNECTOR PARTS	
3598711C1	12-WAY CONNECTOR BODY J1 (1603)
3573833C1	12-WAY CONNECTOR LOCK J1 (1603)
3544878C1	WIRE TERMINAL 12/14-GAUGE J1 (1603)
3544877C1	WIRE TERMINAL 14/16-GAUGE J1 (1603)
3544876C1	WIRE TERMINAL 16/18-GAUGE J1 (1603)
3544875C1	WIRE TERMINAL 18/20-GAUGE J1 (1603)
3544878C1	18-WAY BODY CONTROLLER J6 (1606/2023) CONNECTOR WIRE TERMINAL 12-14-GAUGE [GT280]

3544877C1	18-WAY BODY CONTROLLER J6 (1606/2023) CONNECTOR WIRE TERMINAL 14/16-GAUGE [GT280]
3544876C1	18-WAY BODY CONTROLLER J6 (1606/2023) CONNECTOR WIRE TERMINAL 16/18-GAUGE [GT280]
3544875C1	18-WAY BODY CONTROLLER J6 (1606/2023) CONNECTOR WIRE TERMINAL 18/20-GAUGE [GT280]
3544884C1	18-WAY BODY CONTROLLER J6 (1606/2023) CONNECTOR WIRE TERMINAL 16/18-GAUGE [GT150]
3544883C1	18-WAY BODY CONTROLLER J6 (1606/2023) CONNECTOR WIRE TERMINAL 20/22-GAUGE [GT150]

Parts Required to Connect to Work Light Cable

How to Test This Feature:
1. Activate work light switch.
2. Verify that pin G (labeled Work Light) on the Body Controller (BCM) connector (#1603) is providing battery voltage.
3. Verify that the work light (or alternate load) is functioning properly.
4. Turn work light switch OFF.
5. Verify that the work light output goes OFF.

Note: This feature uses body controller-based software controls which can be diagnosed with International's Diamond Logic® Builder software (see local dealer if not owned).

References:
Refer to the applicable International® Circuit Diagrams and Service Manuals

41.7. 08XBK: SWITCH, AUXILIARY Switch 40-AMP Circuit for Customer Use; Includes Wiring Connection in the engine compartment near the mega-fuse.

Feature Applicability to Vehicle Platforms:
- Heavy Vocational (HV**)**
- Heavy Extreme (HX) 2021 and Newer

Extended Description: Feature code 08XBK provides a 40-Amp accessory feed for customer use. An in-cab rocker switch controls the circuit. A blank windowed two position latching switch is provided with this feature along with a graphic overlay kit that allows custom labeling of the switch function.
System Block Diagram:

Body Controller Software Feature Codes:
597310 - BCM PROG, SWITCH AUX 40-AMP

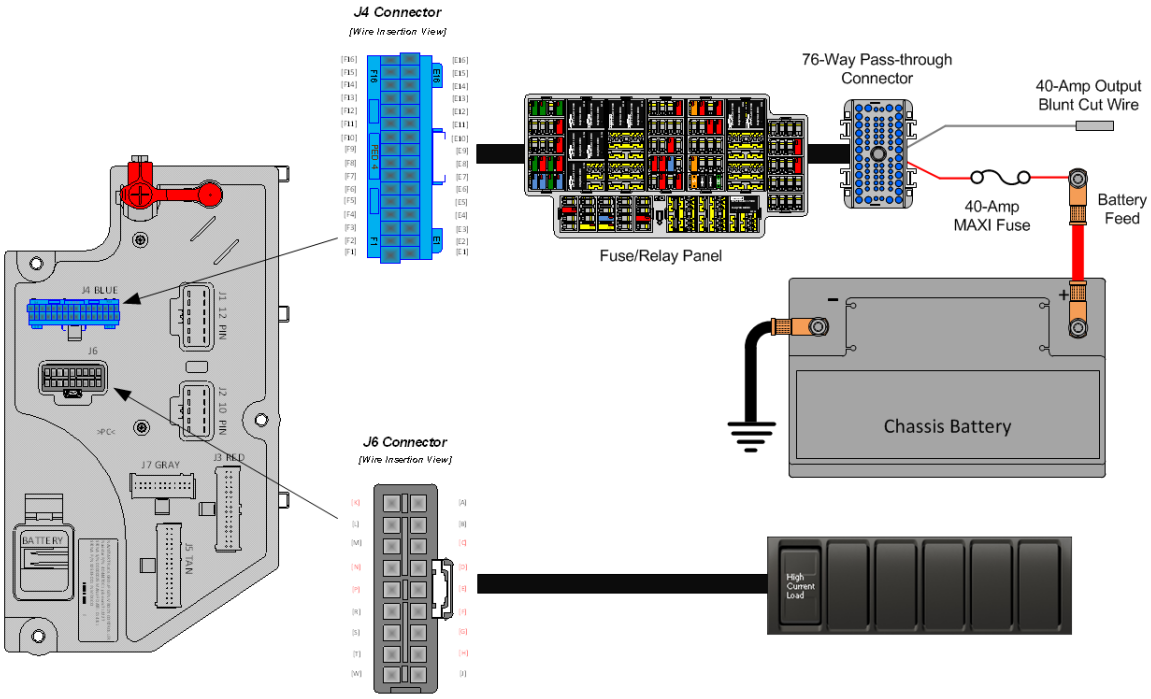

Parts Associated with This Feature:

PART NUMBER	DESCRIPTION
MULTIPLEX SWITCH-PACK PARTS	
4057689C4	HOUSING, SWITCH 6-PACK DIN MULTIPLEX
4102431C1	SWITCH, ELECTRONIC, BLANK WINDOW ROCKER - 2 POS - BISTABLE
3534204C1	FUSE, MAXI, 40 AMP
3525613C1	MAXI FUSE HOLDER
3614762C1	MAXI FUSE HOLDER TERMINAL 12 GAUGE WIRE
3515522C1	MAXI FUSE HOLDER TERMINAL 10GAUGE WIRE
3541256C1	TERMINAL SEAL
3515524C1	FUSE HOLDER COVER

Parts Associated with Fuse and Switch Feature

How to Test This Feature:
To test this circuit, verify that battery voltage is present at the wire provided when the in-cab switch is activated with the IGN key in the on or accessory position. The green indicator in the rocker switch shall be illuminated when the output is on.

Note: This feature uses body controller-based software controls which can be diagnosed with International's Diamond Logic® Builder software (see local dealer if not owned).

References:
Refer to the applicable International® Circuit Diagrams and Service Manuals

41.8. 08XBM: TOGGLE SWITCH, AUXILIARY (1) with One 30-Amp Circuit Breaker.

Feature Applicability to Vehicle Platforms:

- Line Haul Transport (LT)
- Regional Haul (RH)

Extended Description: This feature consists of 1 switch mounted in the center panel used to control a relay that controls power to a blunt cut wire. The feature is fed by accessory circuits and is protected with a 30-AMP fuse.

System Block Diagram:

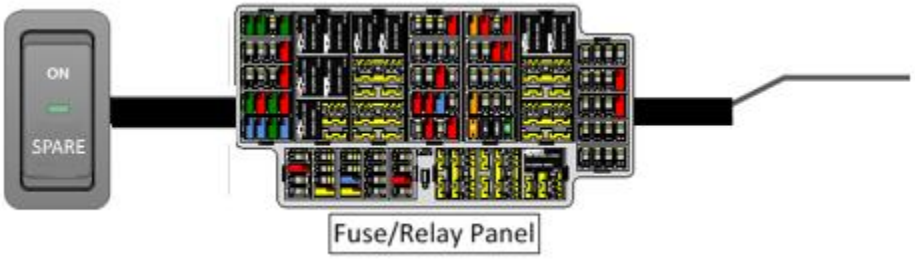

Parts Associated with This Feature:

PART NUMBER	DESCRIPTION
4057715C2	SWITCH, SPARE

Part Number Associated with Auxiliary Switch Feature

How to Test This Feature:

1. Turn on in-cab switch.
2. Verify that the added feature operates.
3. Verify that the feed wire is receiving battery voltage.

References:

Refer to the applicable International® Circuit Diagrams and Service Manuals.

41.9. 08XBN: TOGGLE SWITCH, AUXILIARY (2) with Two 30-Amp Circuit Breakers.

Feature Applicability to Vehicle Platforms:

- Line Haul Transport (LT)
- Regional Haul (RH)

Extended Description: This feature consists of 2 switches mounted in the center panel used to control relays that control power to blunt cut wires. The feature is fed by accessory circuits and is protected with 30-AMP fuses.

System Block Diagram:

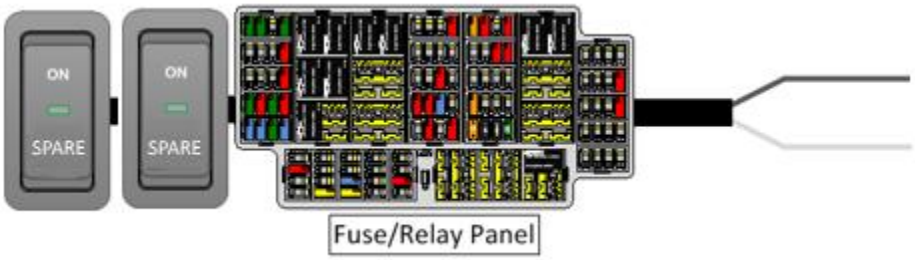

Parts Associated with This Feature:

PART NUMBER	DESCRIPTION
4057715C2	SWITCH, SPARE

Part Number Associated with Auxiliary Load Feature

How to Test This Feature:
1. Turn on in-cab switch.
2. Verify that the added feature operates.
3. Verify that the feed wire is receiving battery voltage.

References:
Refer to the applicable International® Circuit Diagrams and Service Manuals.

41.10. 08WAA: WORK LIGHT (LED); Pedestal Mounted with Switch on Instrument Panel (Truck Lite 81 Series).

Feature Applicability to Vehicle Platforms:

- Heavy Vocational (HV)
- Line Haul Transport (LT)
- Medium Vocational (MV)
- Regional Haul (RH)

Extended Description: With the International®-installed work light 08WAA, nighttime trailer hook-ups are made easier with a work light mounted at the Back of Cab (BOC) on tractors. This light illuminates the fifth wheel area of the vehicle. This feature includes a switch in the Instrument Panel (IP). The switch will illuminate when the switch is on. This feature provides an output from the Body Controller (BCM) and includes the wiring and work light mounted at the Back of Cab (BOC).

If the engine is off, there is a time out feature, which is factory set at 120-minutes. The time out period can be changed through the Diamond Logic® Builder software (see local dealer if not owned). If the vehicle is running, the work light will not time out after 120-minutes. If the work light is left on when the vehicle is moving, the green indicator light in the work light switch will flash.

System Block Diagram:

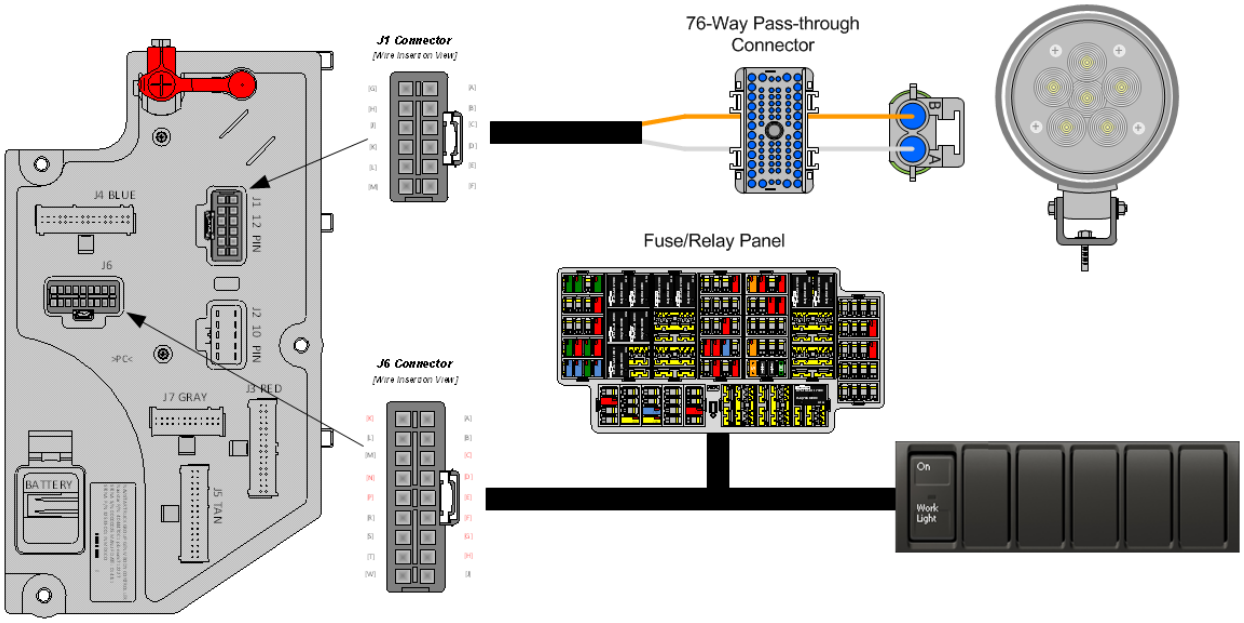

Body Controller Software Feature Codes:

- 597008 - BCM PROG, WORK LIGHT Rocker Switch
    - (If there is the desire to turn off the work light feature's diagnostics each parameter setting will need to be set to zero).

Body Controller Software Feature Code Parameters:

Parameter	ID	Description	Default	Units	Min	Max	Step
Work_Light_Hi_ Current	1899	Work Light High Current Detection Level (Amps)	10	A	0	10	0.1
Work_Light_Lo_ Current	1898	Work Light Low Current Detection Level (Amps)	0.5	A	0	10	0.1
Work_Light_OC_ Current	1900	Work Light Open Circuit Detection Level (Amps)	0.5	A	0	10	0.1
Work_Light_Off_ Speed	2568	This parameter is required to turn off the work light if the vehicle's speed is greater than the work light off-speed parameter	2	Mph	1	90	2
Work_Light_Tim eout_Enable	640	This parameter sets the amount of time that the work light will remain on after the ignition is turned to off.	2	Hours	0.16	24	0.16

Parameter Definitions:

- **Work_Light_Hi_Current** - If the current in the work light circuit exceeds the level set by this parameter, the Body Controller (BCM) will shut off the circuit and register a fault code.

- **Work_Light_Lo_Current** - If the current in the work light circuit falls below the level set by this parameter, the Body Controller (BCM) will register a fault code.

- **Work_Light_OC_Current** - This parameter should be left at its factory default of zero.

- **Work_Light_Off_Speed** – This is a programmable parameter for vehicle speed. Once this value is achieved the body controller will turn off the work light.

- **Work_Light_Timeout_Enable** – This parameter is used to set the amount of time that the customer desires the work light to remain on after the IGN key is turned off. This parameter is for customers who desire to have their work light. time out after a specified length of time so that the light does not drain the battery(s) in case the operator forgets to turn the work light off.

arts Associated with This Feature:

PART NUMBER	DESCRIPTION
WORK LIGHT RELATED HARDWARE	
3542321C92	CABLE, ASM, WORK LT/PWR CONTROL, BACK OF CAB
3682350C1	LIGHT, FLOOD, LED, PEDESTAL MOUNT W/SEALED CONNECTOR
1667880C3	SUPPORT, WORK LIGHT MOUNTING
31047R1	BOLT, HEX FLG HD M6 X 25
40209R1	NUT, M6, FLANGED LOCK, PHC
289862C1	STRAP, CABLE LOCK
289862C1	STRAP, CABLE LOCK
3544557C1	STRAP, CABLE LOCK, BUTTON HEAD TIE WITH 2-SIDE ARROWS
1661778C1	2-WAY CONNECTOR BODY
WORK LIGHT CONNECTOR (CHASSIS HARNESS)	
1661778C1	2-WAY CONNECTOR BODY
1661875C1	WIRE TERMINAL 16-GAUGE
1661874C1	CONNECTOR LOCK
1661872C1	WIRE TERMINAL SEAL 16-GAUGE
WORK LIGHT MATING CONNECTOR (BODY BUILDER HARNESS)	
3543888C1	2-WAY CONNECTOR BODY
1661874C1	CONNECTOR LOCK
1667742C1	WIRE TERMINAL 16-GUAGE
1661872C1	WIRE TERMINAL SEAL 16-GAUGE
MULTIPLEX SWITCH-PACK PARTS	
4057689C1	HOUSING, SWITCH 6-PACK DIN MULTIPLEX
4102405C1	POSITION 3-POSITION MONOSTABLE “MOMENTARY” WORK LIGHT SWITCH ACTUATOR
BODY CONTROL MODULE J1/J6 CONNECTOR PARTS	
3598711C1	12-WAY CONNECTOR BODY J1 (1603)
3573833C1	12-WAY CONNECTOR LOCK J1 (1603)
3544878C1	WIRE TERMINAL 12/14-GAUGE J1 (1603)
3544877C1	WIRE TERMINAL 14/16-GAUGE J1 (1603)
3544876C1	WIRE TERMINAL 16/18-GAUGE J1 (1603)
3544875C1	WIRE TERMINAL 18/20-GAUGE J1 (1603)
3544878C1	18-WAY BODY CONTROLLER J6 (1606/2023) CONNECTOR WIRE TERMINAL 12-14-GAUGE [GT280]
3544877C1	18-WAY BODY CONTROLLER J6 (1606/2023) CONNECTOR WIRE TERMINAL 14/16-GAUGE [GT280]
3544876C1	18-WAY BODY CONTROLLER J6 (1606/2023) CONNECTOR WIRE TERMINAL 16/18-GAUGE [GT280]
3544875C1	18-WAY BODY CONTROLLER J6 (1606/2023) CONNECTOR WIRE TERMINAL 18/20-GAUGE [GT280]
3544884C1	18-WAY BODY CONTROLLER J6 (1606/2023) CONNECTOR WIRE TERMINAL 16/18-GAUGE [GT150]

3544883C1	18-WAY BODY CONTROLLER J6 (1606/2023) CONNECTOR WIRE TERMINAL 20/22-GAUGE [GT150]

LED Work Light Wiring with Standard Pedestal Mount

How to Test This Feature:
1. Activate work light switch.
2. Verify that pin G (labeled Work Light) on the Body Controller (BCM) connector (#1603) is providing battery voltage.
3. Verify that the work light (or alternate load) is functioning properly.
4. Turn work light switch OFF.
5. Verify that the work light output goes OFF.

Note: This feature uses body controller-based software controls which can be diagnosed with The International® Diamond Logic® Builder software (see local dealer if not owned).

References:
Refer to the applicable International® Circuit Diagrams and Service Manuals.

41.11. 08WJZ: WORKLIGHT ON W/BACKUP Work Lights will Activate when Vehicle is in Reverse

Feature Applicability to Vehicle Platforms:

- Heavy Vocational (HV)
- Line Haul Transport (LT)
- Medium Vocational (MV)
- Regional Haul (RH)

Extended Description: This feature will activate the work light when the BCM senses that the vehicle is in reverse gear. It must be configured with the Work Light Switch Feature 08WTT.

Note: A 12-volt reverse signal input to BCM connector 1602 pin F10 will need to be added if the truck was not built with this feature.

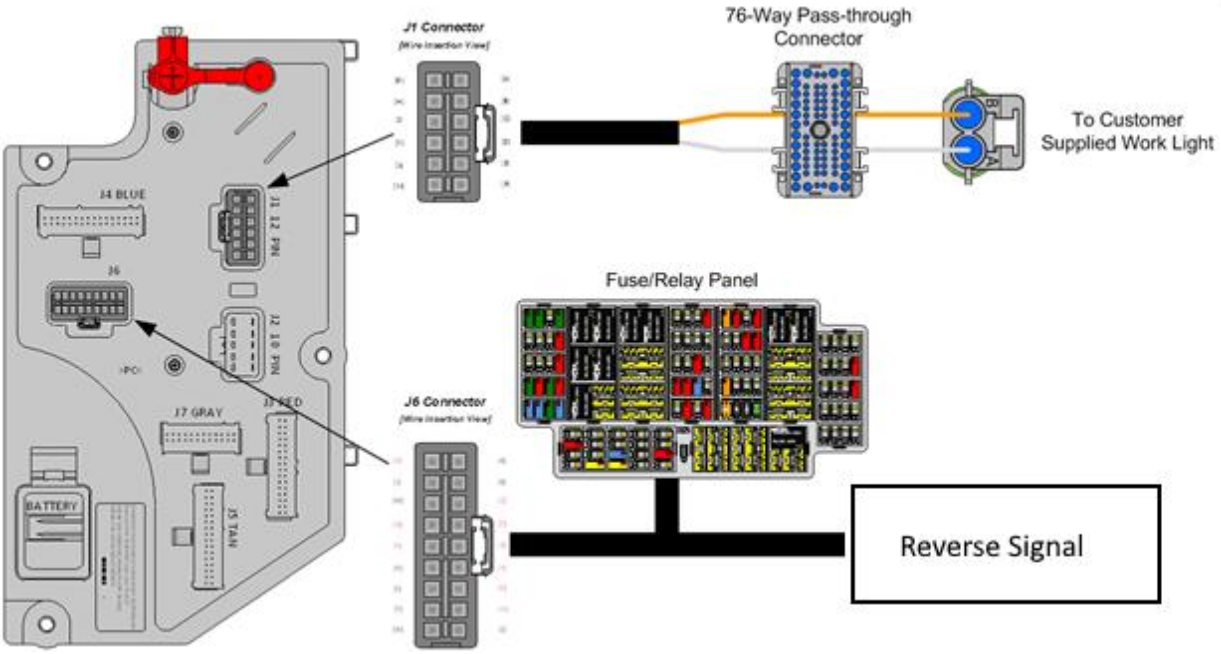

Body Controller Software Feature Codes:

0597084 BCM PROG, WORKLIGHT ON W/BACKUP

arts Associated with This Feature:

PART NUMBER	DESCRIPTION
MULTIPLEX SWITCH-PACK PARTS	
4057689C4	HOUSING, SWITCH 6-PACK DIN MULTIPLEX

4102405C1	POSITION 3-POSITION MONOSTABLE “MOMENTARY” WORK LIGHT SWITCH ACTUATOR
WORK LIGHT CONNECTOR (CHASSIS HARNESS)	
1661778C1	2-WAY CONNECTOR BODY
1661875C1	WIRE TERMINAL 16-GAUGE
1661874C1	CONNECTOR LOCK
1661872C1	WIRE TERMINAL SEAL 16-GAUGE
WORK LIGHT MATING CONNECTOR (CHASSIS HARNESS)	
3543888C1	2-WAY CONNECTOR BODY
1661874C1	CONNECTOR LOCK
1667742C1	WIRE TERMINAL 16-GUAGE
1661872C1	WIRE TERMINAL SEAL 16-GAUGE
BODY CONTROL MODULE J1/J6 CONNECTOR PARTS	
3598711C1	12-WAY CONNECTOR BODY J1 (1603)
3573833C1	12-WAY CONNECTOR LOCK J1 (1603)
3544878C1	WIRE TERMINAL 12/14-GAUGE J1 (1603)
3544877C1	WIRE TERMINAL 14/16-GAUGE J1 (1603)
3544876C1	WIRE TERMINAL 16/18-GAUGE J1 (1603)
3544875C1	WIRE TERMINAL 18/20-GAUGE J1 (1603)
3544878C1	18-WAY BODY CONTROLLER J6 (1606/2023) CONNECTOR WIRE TERMINAL 12-14-GAUGE [GT280]
3544877C1	18-WAY BODY CONTROLLER J6 (1606/2023) CONNECTOR WIRE TERMINAL 14/16-GAUGE [GT280]
3544876C1	18-WAY BODY CONTROLLER J6 (1606/2023) CONNECTOR WIRE TERMINAL 16/18-GAUGE [GT280]
3544875C1	18-WAY BODY CONTROLLER J6 (1606/2023) CONNECTOR WIRE TERMINAL 18/20-GAUGE [GT280]
3544884C1	18-WAY BODY CONTROLLER J6 (1606/2023) CONNECTOR WIRE TERMINAL 16/18-GAUGE [GT150]
3544883C1	18-WAY BODY CONTROLLER J6 (1606/2023) CONNECTOR WIRE TERMINAL 20/22-GAUGE [GT150]

Parts Required to Connect to Work Light Cable

How to Test This Feature:

1. Put vehicle in reverse.
2. Verify that 1602-F10 is receiving a 12-volt reverse input.
3. Verify that pin G (labeled Work Light) on the Body Controller (BCM) connector (#1603) is providing battery voltage.
4. Verify that the work light (or alternate load) is functioning properly.
5. Put vehicle in neutral.
6. Verify that the work light output goes OFF.

Note: This feature uses body controller-based software controls which can be diagnosed with The International® Diamond Logic® Builder software (see local dealer if not owned).

References:
Refer to the applicable International® Circuit Diagrams and Service Manuals.

41.12. 08WTT: SWITCH, TOGGLE, FOR WORK LIGHT Lighted; on Instrument Panel and Wiring Effects for Customer Furnished End of Frame Light

Feature Applicability to Vehicle Platforms:

- Heavy Extreme (HX) 2021 and Newer

Extended Description: This feature includes a switch in the Instrument Panel (IP). The switch will illuminate when the switch is on. The feature provides an output from the Body Controller (BCM) and provides wiring to the back of cab which includes power and ground. This can be used to satisfy any number of electrical needs such as lights inside dry van boxes, small pumps, and illumination to aid in various job functions.
If the engine is off, there is a time out parameter, which is factory set at 120-minutes. If the vehicle is running, the work light will not time out. If the work light is left on when the vehicle is moving, the work light will turn off when the vehicle speed exceeds the work light off-speed parameter. This parameter is factory set at 2-MPH. Both parameters can be changed through the Diamond Logic® Builder software.

System Block Diagram:

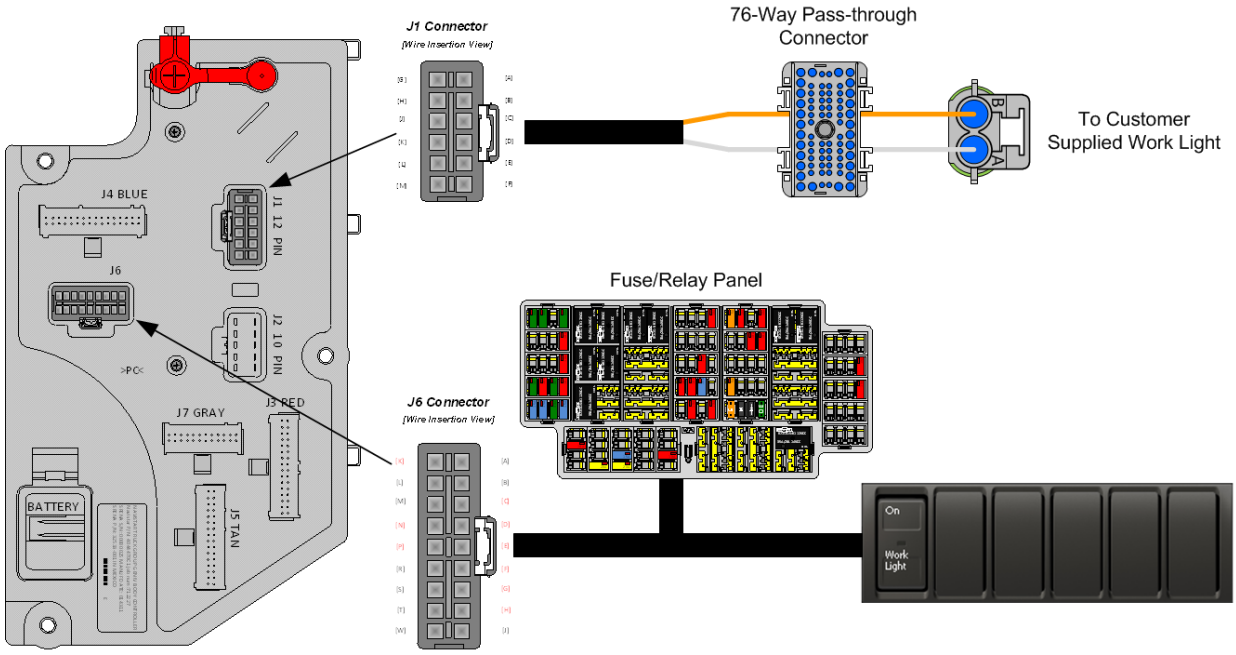

Body Controller Software Feature Codes:

- 597008 - BCM PROG, WORK LIGHT Rocker Switch
    - (If there is the desire to turn off the work light feature's diagnostics each parameter setting will need to be set to zero).

Body Controller Software Feature Code Parameters:

Parameter	ID	Description	Default	Units	Min	Max	Step
Work_Light_Hi_ Current	1899	Work Light High Current Detection Level (Amps)	10	A	0	10	0.1
Work_Light_Lo_ Current	1898	Work light Low Current Detection Level (Amps)	0.5	A	0	10	0.1
Work_Light_OC_ Current	1900	Work Light Open Circuit Detection Level (Amps)	0.5	A	0	10	0.1
Work_Light_Off_ Speed	2568	This parameter is required to turn off the work light if the vehicle's speed is greater than the work light off-speed parameter	2	Mph	1	90	2
Work_Light_Tim eout_Enable	640	This parameter sets the amount of time that the work light will remain on after the ignition is turned to off.	2	Hours	0.16	24	0.16

Parameter Definitions:

- **Work_Light_Hi_Current** - If the current in the work light circuit exceeds the level set by this parameter, the Body Controller (BCM) will shut off the circuit and register a fault code.

- **Work_Light_Lo_Current** - If the current in the work light circuit falls below the level set by this parameter, the Body Controller (BCM) will register a fault code.

- **Work_Light_OC_Current** - This parameter should be left at its factory default of zero.

- **Work_Light_Off_Speed** – This is a programmable parameter for vehicle speed. Once this value is achieved the body controller will turn off the work light.

- **Work_Light_Timeout_Enable** – This parameter is used to set the amount of time that the customer desires the work light to remain on after the IGN key is turned off. This parameter is for customers who desire to have their work light. time out after a specified length of time so that the light does not drain the battery(s) in case the operator forgets to turn the work light off.

- battery(s) in case the operator forgets to turn the work light off.

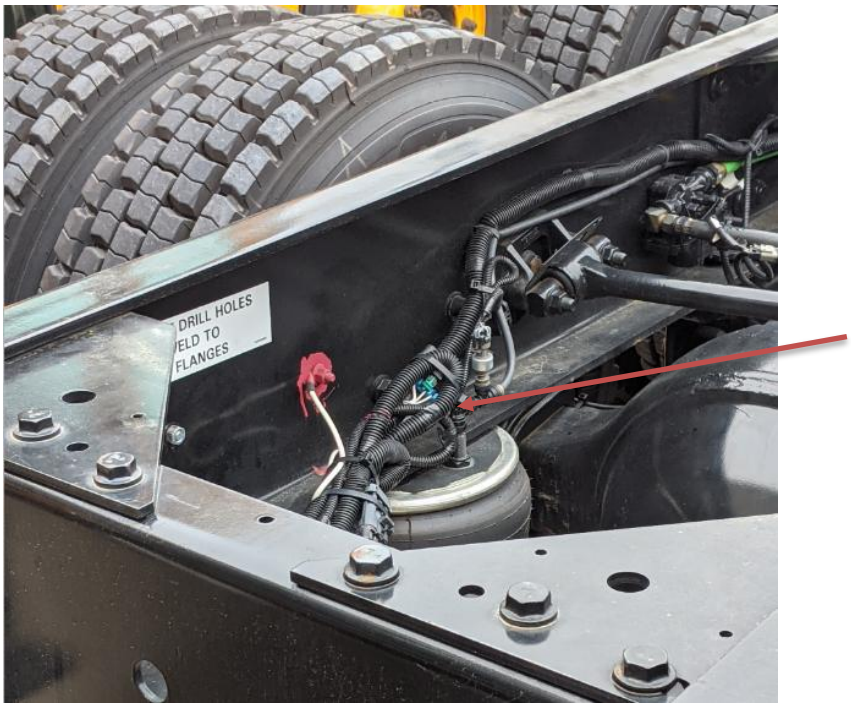

Arrow Indicates Location of Work Light Connector (Straight Truck)

Parts Associated with This Feature:

PART NUMBER	DESCRIPTION
MULTIPLEX SWITCH-PACK PARTS	
4057689C4	HOUSING, SWITCH 6-PACK DIN MULTIPLEX
4102405C1	POSITION 3-POSITION MONOSTABLE “MOMENTARY” WORK LIGHT SWITCH ACTUATOR
WORK LIGHT CONNECTOR (CHASSIS HARNESS)	
1661778C1	2-WAY CONNECTOR BODY
1661875C1	WIRE TERMINAL 16-GAUGE
1661874C1	CONNECTOR LOCK
1661872C1	WIRE TERMINAL SEAL 16-GAUGE
WORK LIGHT MATING CONNECTOR (CHASSIS HARNESS)	
3543888C1	2-WAY CONNECTOR BODY
1661874C1	CONNECTOR LOCK
1667742C1	WIRE TERMINAL 16-GUAGE
1661872C1	WIRE TERMINAL SEAL 16-GAUGE
BODY CONTROL MODULE J1/J6 CONNECTOR PARTS	
3598711C1	12-WAY CONNECTOR BODY J1 (1603)
3573833C1	12-WAY CONNECTOR LOCK J1 (1603)
3544878C1	WIRE TERMINAL 12/14-GAUGE J1 (1603)
3544877C1	WIRE TERMINAL 14/16-GAUGE J1 (1603)

3544876C1	WIRE TERMINAL 16/18-GAUGE J1 (1603)
3544875C1	WIRE TERMINAL 18/20-GAUGE J1 (1603)
3544878C1	18-WAY BODY CONTROLLER J6 (1606/2023) CONNECTOR WIRE TERMINAL 12-14-GAUGE [GT280]
3544877C1	18-WAY BODY CONTROLLER J6 (1606/2023) CONNECTOR WIRE TERMINAL 14/16-GAUGE [GT280]
3544876C1	18-WAY BODY CONTROLLER J6 (1606/2023) CONNECTOR WIRE TERMINAL 16/18-GAUGE [GT280]
3544875C1	18-WAY BODY CONTROLLER J6 (1606/2023) CONNECTOR WIRE TERMINAL 18/20-GAUGE [GT280]
3544884C1	18-WAY BODY CONTROLLER J6 (1606/2023) CONNECTOR WIRE TERMINAL 16/18-GAUGE [GT150]
3544883C1	18-WAY BODY CONTROLLER J6 (1606/2023) CONNECTOR WIRE TERMINAL 20/22-GAUGE [GT150]

Parts Required to Connect to Work Light Cable

How to Test This Feature:
1. Activate work light switch.
2. Verify that pin G (labeled Work Light) on the Body Controller (BCM) connector (#1603) is providing battery voltage.
3. Verify that the work light (or alternate load) is functioning properly.
4. Turn work light switch OFF.
5. Verify that the work light output goes OFF.

Note: This feature uses body controller-based software controls which can be diagnosed with International's Diamond Logic® Builder software (see local dealer if not owned).

References:
Refer to the applicable International® Circuit Diagrams and Service Manuals

41.13. 08WEX: AUXILIARY HARNESS for Auxiliary Power Source; 30-Amp, Key Switched, 2-Pin Connector, Located on Floor Between Seats.

Feature Applicability to Vehicle Platforms:
- Heavy Vocational (HV)
- Heavy Extreme (HX) 2021 and Newer

Extended Description: This feature consists of ignition key switched wiring that is routed up the right "A" pillar to the back of cab to a coil that when stretched out can reach between the seats. The circuit is protected with a 30-AMP fuse. This feature is only available on the HV models.

System Block Diagram:

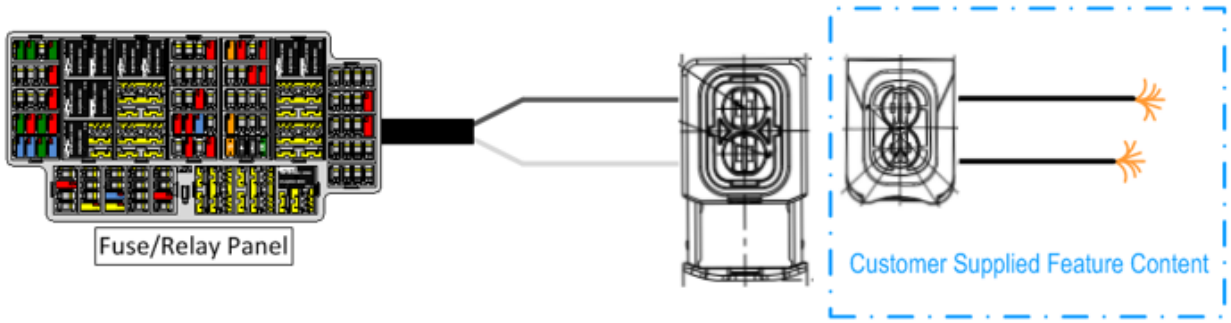

Parts Associated with This Feature:

PART NUMBER	DESCRIPTION
AUXILIARY PWR SOURCE (CHASSIS HARNESS CONNECTOR PARTS)	
4110038C1	2-WAY CONNECTOR BODY
6113343C1	WIRE TERMINAL
6113346C1	SEAL
AUXILIARY PWR SOURCE (BODY BUILDER HARNESS CONNECTOR PARTS)	
4115742C1	2-WAY CONNECTOR BODY
4231667C1	WIRE TERMINAL)
6113346C1	SEAL

Terminal Part Numbers Needed to Connect to Feature

How to Test This Feature:
1. Turn on ignition switch.
2. Verify that the added feature operates.
3. Verify that the feed wire is receiving battery voltage.

Note: This feature uses body controller-based software controls which can be diagnosed with The International® Diamond Logic® Builder software (see local dealer if not owned).

References:
Refer to the applicable International® Circuit Diagrams and Service Manuals.

41.14. 08WLL: WORK LIGHT; Pedestal Mounted with Switch on Instrument Panel (Truck Lite 81 Series).

Feature Applicability to Vehicle Platforms:
- Line Haul Transport (LT)
- Medium Vocational (MV)
- Regional Haul (RH)

Extended Description: With the International®-installed work light 08WLL nighttime trailer hook-ups are made easier with a work light mounted at the Back of Cab (BOC) on tractors. This light illuminates the fifth wheel area of the vehicle. This feature includes a switch in the Instrument Panel (IP). The switch will illuminate when the switch is on. This feature provides an output from the Body Controller (BCM) and includes the wiring and work light pedestal mounted at the Back of Cab (BOC).

If the engine is off, there is a time out feature, which is factory set at 120-minutes. The time out period can be changed through the Diamond Logic® Builder software (see local dealer if not owned). If the vehicle is running, the work light will not time out after 120-minutes. If the work light is left on when the vehicle is moving, the green indicator light in the work light switch will flash.

System Block Diagram:

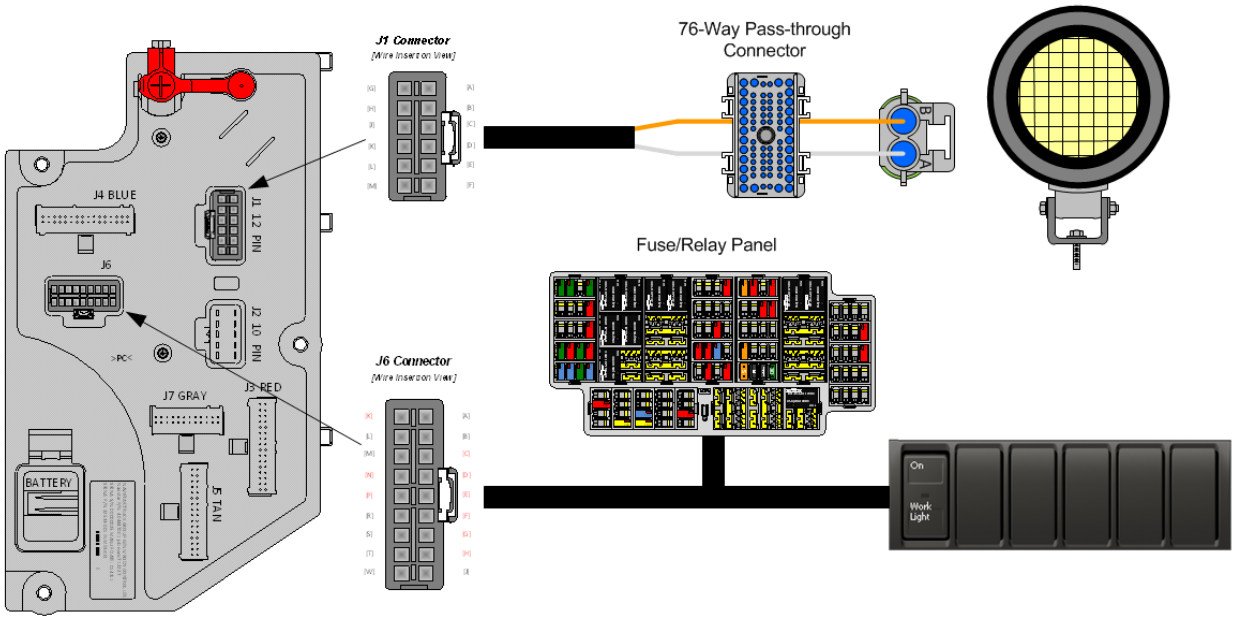

Body Controller Software Feature Codes:

- 597008 - BCM PROG, WORK LIGHT Rocker Switch or Push Button B
    - (If there is the desire to turn off the work light feature's diagnostics each parameter setting will need to be set to zero).

Body Controller Software Feature Code Parameters:

Parameter	ID	Description	Default	Units	Min	Max	Step
Work_Light_Hi_ Current	1899	Work Light High Current Detection Level (Amps)	10	A	0	10	0.1
Work_Light_Lo_ Current	1898	Work Light Low Current Detection Level (Amps)	0.5	A	0	10	0.1
Work_Light_OC_ Current	1900	Work Light Open Circuit Detection Level (Amps)	0.5	A	0	10	0.1
Work_Light_Off_ Speed	2568	This parameter is required to turn off the work light if the vehicle's speed is greater than the work light off-speed parameter	2	Mph	1	90	2
Work_Light_Tim eout_Enable	640	This parameter sets the amount of time that the work light will remain on after the ignition is turned to off.	2	Hours	0.16	24	0.16

Parameter Definitions:

- **Work_Light_Hi_Current** - If the current in the work light circuit exceeds the level set by this parameter, the Body Controller (BCM) will shut off the circuit and register a fault code.

- **Work_Light_Lo_Current** - If the current in the work light circuit falls below the level set by this parameter, the Body Controller (BCM) will register a fault code.

- **Work_Light_OC_Current** - This parameter should be left at its factory default of zero.

- **Work_Light_Off_Speed** – This is a programmable parameter for vehicle speed. Once this value is achieved the body controller will turn off the work light.

  Work_Light_Timeout_Enable – This parameter is used to set the amount of time that the customer desires the work light to remain on after the IGN key is turned off. This parameter is for customers who desire to have their work light. time out after a specified length of time so that the light does not drain the battery(s) in case the operator forgets to turn the work light off.

Parts Associated with This Feature:

PART NUMBER	DESCRIPTION
WORK LIGHT RELATED HARDWARE	
3542321C92	CABLE, ASM, WORK LT/PWR CONTROL, BACK OF CAB
3625758C1	LIGHT, FLOOD, INCANDECENT PEDESTAL MOUNT W/SEALED CONNECTOR
1667880C3	SUPPORT, WORK LIGHT MOUNTING
31047R1	BOLT, HEX FLG HD M6 X 25
40209R1	NUT, M6, FLANGED LOCK, PHC
289862C1	STRAP, CABLE LOCK

289862C1	STRAP, CABLE LOCK
3544557C1	STRAP, CABLE LOCK, BUTTON HEAD TIE WITH 2-SIDE ARROWS
WORK LIGHT CONNECTOR (CHASSIS HARNESS)	
1661778C1	2-WAY CONNECTOR BODY
1661875C1	WIRE TERMINAL 16-GAUGE
1661874C1	CONNECTOR LOCK
1661872C1	WIRE TERMINAL SEAL 16-GAUGE
WORK LIGHT MATING CONNECTOR (BODY BUILDER HARNESS)	
3543888C1	2-WAY CONNECTOR BODY
1661874C1	CONNECTOR LOCK
1667742C1	WIRE TERMINAL 16-GUAGE
1661872C1	WIRE TERMINAL SEAL 16-GAUGE
MULTIPLEX SWITCH-PACK PARTS	
4057689C1	HOUSING, SWITCH 6-PACK DIN MULTIPLEX
4102405C1	POSITION 3-POSITION MONOSTABLE “MOMENTARY” WORK LIGHT SWITCH ACTUATOR
BODY CONTROL MODULE J1/J6 CONNECTOR PARTS	
3598711C1	12-WAY CONNECTOR BODY J1 (1603)
3573833C1	12-WAY CONNECTOR LOCK J1 (1603)
3544878C1	WIRE TERMINAL 12/14-GAUGE J1 (1603)
3544877C1	WIRE TERMINAL 14/16-GAUGE J1 (1603)
3544876C1	WIRE TERMINAL 16/18-GAUGE J1 (1603)
3544875C1	WIRE TERMINAL 18/20-GAUGE J1 (1603)
3544878C1	18-WAY BODY CONTROLLER J6 (1606/2023) CONNECTOR WIRE TERMINAL 12-14-GAUGE [GT280]
3544877C1	18-WAY BODY CONTROLLER J6 (1606/2023) CONNECTOR WIRE TERMINAL 14/16-GAUGE [GT280]
3544876C1	18-WAY BODY CONTROLLER J6 (1606/2023) CONNECTOR WIRE TERMINAL 16/18-GAUGE [GT280]
3544875C1	18-WAY BODY CONTROLLER J6 (1606/2023) CONNECTOR WIRE TERMINAL 18/20-GAUGE [GT280]
3544884C1	18-WAY BODY CONTROLLER J6 (1606/2023) CONNECTOR WIRE TERMINAL 16/18-GAUGE [GT150]
3544883C1	18-WAY BODY CONTROLLER J6 (1606/2023) CONNECTOR WIRE TERMINAL 20/22-GAUGE [GT150]

Parts Required to Connect to Work Light Cable

How to Test This Feature:
1. Activate work light switch.
2. Verify that pin G (labeled Work Light) on the Body Controller (BCM) connector (#1603) is providing battery voltage.
3. Verify that the work light (or alternate load) is functioning properly.
4. Turn work light switch OFF.
5. Verify that the work light output goes OFF.

Note: This feature uses body controller-based software controls which can be diagnosed with The International® Diamond Logic® Builder software (see local dealer if not owned).

References:
Refer to the applicable International® Circuit Diagrams and Service Manuals.

41.15. 08WMA: SWITCH, TOGGLE, FOR WORK LIGHT Lighted; on Instrument Panel and Wiring Effects for Customer Furnished Back of Cab Light.

Feature Applicability to Vehicle Platforms:

- Heavy Vocational (HV)
- Line Haul Transport (LT)
- Medium Vocational (MV)
- Regional Haul (RH)

Extended Description: This feature includes a switch in the Instrument Panel (IP). The switch will illuminate when the switch is on. The feature provides an output from the Body Controller (BCM) and provides wiring to the back of cab which includes power and ground. This can be used to satisfy any number of electrical needs such as lights inside dry van boxes, small pumps, and illumination to aid in various job functions.
If the engine is off, there is a time out parameter, which is factory set at 120-minutes. If the vehicle is running, the work light will not time out. If the work light is left on when the vehicle is moving, the work light will turn off when the vehicle speed exceeds the work light off-speed parameter. This parameter is factory set at 2-MPH. Both parameters can be changed through the Diamond Logic® Builder software.

System Block Diagram:

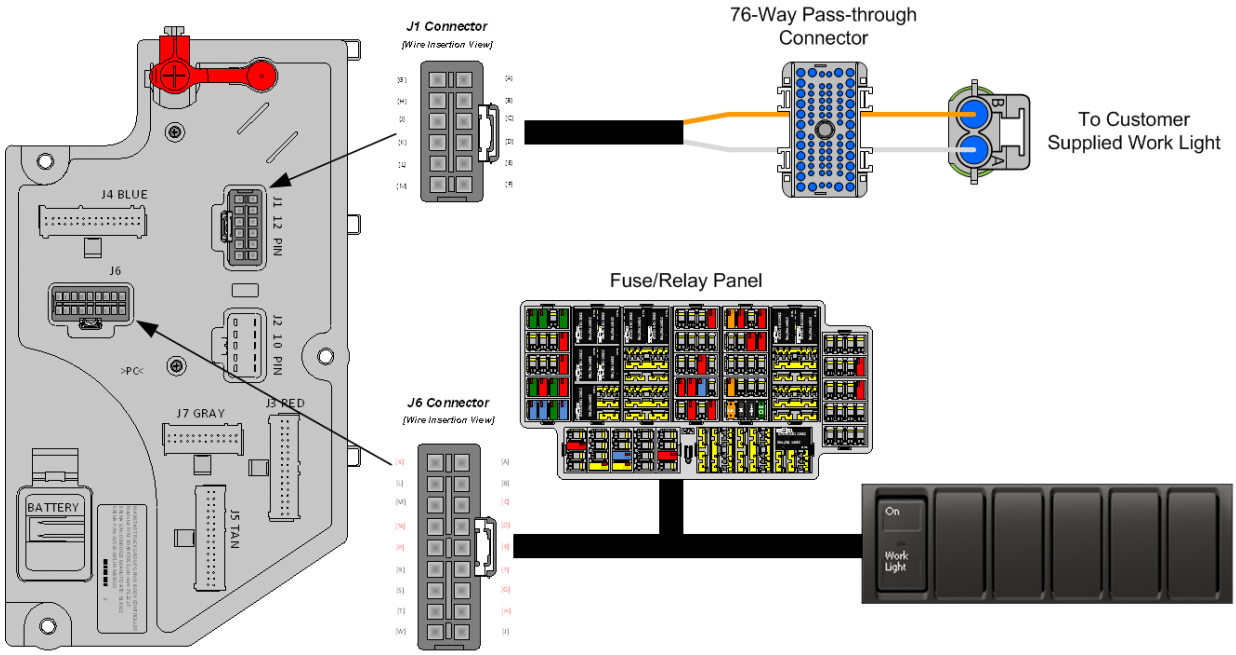

Body Controller Software Feature Codes:

- 597008 - BCM PROG, WORK LIGHT Rocker Switch
    - (If there is the desire to turn off the work light feature's diagnostics each parameter setting will need to be set to zero).

Body Controller Software Feature Code Parameters:

Parameter	ID	Description	Default	Units	Min	Max	Step
Work_Light_Hi_ Current	1899	Work Light High Current Detection Level (Amps)	10	A	0	10	0.1
Work_Light_Lo_ Current	1898	Work light Low Current Detection Level (Amps)	0.5	A	0	10	0.1
Work_Light_OC_ Current	1900	Work Light Open Circuit Detection Level (Amps)	0.5	A	0	10	0.1
Work_Light_Off_ Speed	2568	This parameter is required to turn off the work light if the vehicle's speed is greater than the work light off-speed parameter	2	Mph	1	90	2
Work_Light_Tim eout_Enable	640	This parameter sets the amount of time that the work light will remain on after the ignition is turned to off.	2	Hours	0.16	24	0.16

Parameter Definitions:

- **Work_Light_Hi_Current** - If the current in the work light circuit exceeds the level set by this parameter, the Body Controller (BCM) will shut off the circuit and register a fault code.

- **Work_Light_Lo_Current** - If the current in the work light circuit falls below the level set by this parameter, the Body Controller (BCM) will register a fault code.

- **Work_Light_OC_Current** - This parameter should be left at its factory default of zero.

- **Work_Light_Off_Speed** – This is a programmable parameter for vehicle speed. Once this value is achieved the body controller will turn off the work light.

- **Work_Light_Timeout_Enable** – This parameter is used to set the amount of time that the customer desires the work light to remain on after the IGN key is turned off. This parameter is for customers who desire to have their work light. time out after a specified length of time so that the light does not drain the battery(s) in case the operator forgets to turn the work light off.



Arrow Indicates Location of Work Light Connector (Straight Truck)

Parts Associated with This Feature:

PART NUMBER	DESCRIPTION
MULTIPLEX SWITCH-PACK PARTS	
4057689C1	HOUSING, SWITCH 6-PACK DIN MULTIPLEX
4102405C1	POSITION 3-POSITION MONOSTABLE “MOMENTARY” WORK LIGHT SWITCH ACTUATOR
WORK LIGHT CONNECTOR (CHASSIS HARNESS)	
1661778C1	2-WAY CONNECTOR BODY
1661875C1	WIRE TERMINAL 16-GAUGE
1661874C1	CONNECTOR LOCK
1661872C1	WIRE TERMINAL SEAL 16-GAUGE
WORK LIGHT MATING CONNECTOR (CHASSIS HARNESS)	
3543888C1	2-WAY CONNECTOR BODY
1661874C1	CONNECTOR LOCK
1667742C1	WIRE TERMINAL 16-GUAGE
1661872C1	WIRE TERMINAL SEAL 16-GAUGE
BODY CONTROL MODULE J1/J6 CONNECTOR PARTS	
3598711C1	12-WAY CONNECTOR BODY J1 (1603)
3573833C1	12-WAY CONNECTOR LOCK J1 (1603)
3544878C1	WIRE TERMINAL 12/14-GAUGE J1 (1603)
3544877C1	WIRE TERMINAL 14/16-GAUGE J1 (1603)
3544876C1	WIRE TERMINAL 16/18-GAUGE J1 (1603)
3544875C1	WIRE TERMINAL 18/20-GAUGE J1 (1603)
3544878C1	18-WAY BODY CONTROLLER J6 (1606/2023) CONNECTOR WIRE TERMINAL 12-14-GAUGE [GT280]

3544877C1	18-WAY BODY CONTROLLER J6 (1606/2023) CONNECTOR WIRE TERMINAL 14/16-GAUGE [GT280]
3544876C1	18-WAY BODY CONTROLLER J6 (1606/2023) CONNECTOR WIRE TERMINAL 16/18-GAUGE [GT280]
3544875C1	18-WAY BODY CONTROLLER J6 (1606/2023) CONNECTOR WIRE TERMINAL 18/20-GAUGE [GT280]
3544884C1	18-WAY BODY CONTROLLER J6 (1606/2023) CONNECTOR WIRE TERMINAL 16/18-GAUGE [GT150]
3544883C1	18-WAY BODY CONTROLLER J6 (1606/2023) CONNECTOR WIRE TERMINAL 20/22-GAUGE [GT150]

Parts Required to Connect to Work Light Cable

How to Test This Feature:
1. Activate work light switch.
2. Verify that pin G (labeled Work Light) on the Body Controller (BCM) connector (#1603) is providing battery voltage.
3. Verify that the work light (or alternate load) is functioning properly.
4. Turn work light switch OFF.
5. Verify that the work light output goes OFF.

Note: This feature uses body controller-based software controls which can be diagnosed with The International® Diamond Logic® Builder software (see local dealer if not owned).

References:
Refer to the applicable International® Circuit Diagrams and Service Manuals.

41.16. 08WXN: WORK LIGHT (2) (Grote) 60 Series, Mounted Under Hood One Each Side.

Feature Applicability to Vehicle Platforms:

- Line Haul Transport (LT)
- Regional Haul (RH)

Extended Description: Feature 08WXN includes two engine compartment work lights mounted under hood, one on each side of the engine. This feature includes a switch in the Instrument Panel (IP). The switch will illuminate when the switch is on. This feature provides an output from the Body Controller (BCM) and includes the wiring and work lights mounted under hood to provide illumination of the engine compartment.

If the engine is off, there is a time out feature, which is factory set at 120-minutes. The time out period can be changed through the Diamond Logic® Builder software (see local dealer if not owned). If the vehicle is running, the work light will not time out after 120-minutes. If the work light is left on when the vehicle is moving, the green indicator light in the work light switch will flash.

System Block Diagram:

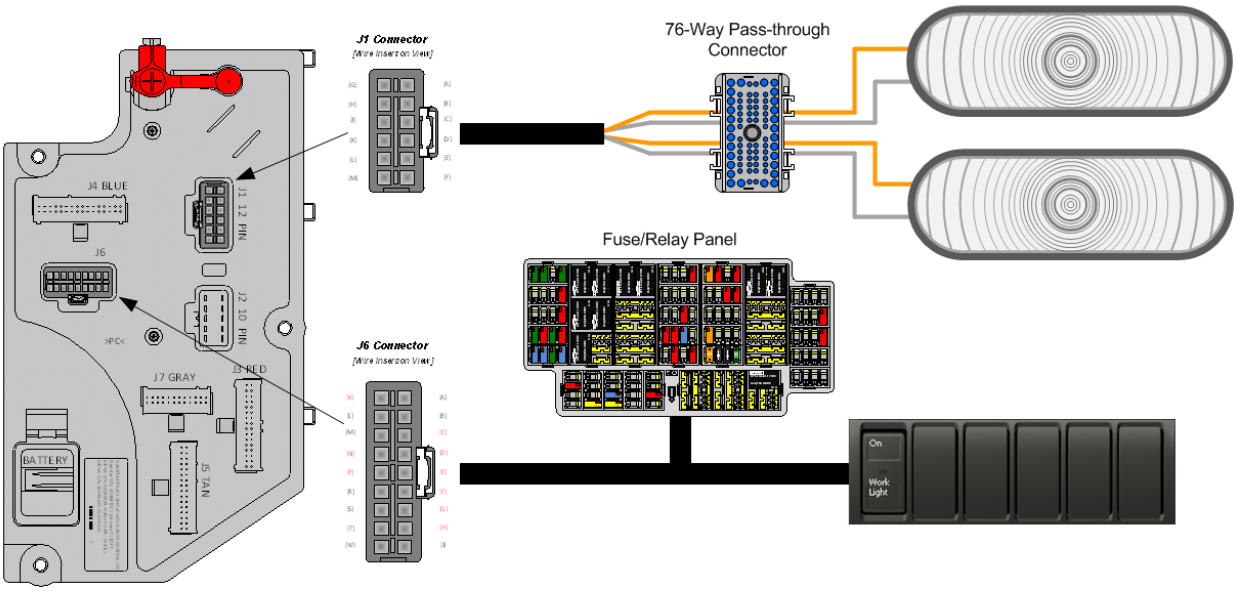

Body Controller Software Feature Codes:

- 597008 - BCM PROG, WORK LIGHT Rocker Switch or Push-Button B
  - (If there is the desire to turn off the work light feature's diagnostics each parameter setting will need to be set to zero).

Body Controller Software Feature Code Parameters:

Parameter	ID	Description	Default	Units	Min	Max	Step

Work_Light_Hi_Current	1899	Work Light High Current Detection Level (Amps)	10	A	0	10	0.1
Work_Light_Lo_Current	1898	Work Light Low Current Detection Level (Amps)	0.5	A	0	10	0.1
Work_Light_OC_Current	1900	Work Light Open Circuit Detection Level (Amps)	0.5	A	0	10	0.1
Work_Light_Off_Speed	2568	This parameter is required to turn off the work light if the vehicle's speed is greater than the work light off-speed parameter	2	Mph	1	90	2
Work_Light_Timeout_Enable	640	This parameter sets the amount of time that the work light will remain on after the ignition is turned to off.	2	Hours	0.16	24	0.16

Parameter Definitions:

- **Work_Light_Hi_Current** - If the current in the work light circuit exceeds the level set by this parameter, the Body Controller (BCM) will shut off the circuit and register a fault code.

- **Work_Light_Lo_Current** - If the current in the work light circuit falls below the level set by this parameter, the Body Controller (BCM) will register a fault code.

- **Work_Light_OC_Current** - This parameter should be left at its factory default of zero.

- **Work_Light_Off_Speed** – This is a programmable parameter for vehicle speed. Once this value is achieved the body controller will turn off the work light.

- **Work_Light_Timeout_Enable** – This parameter is used to set the amount of time that the customer desires the work light to remain on after the IGN key is turned off. This parameter is for customers who desire to have their work light. time out after a specified length of time so that the light does not drain the battery(s) in case the operator forgets to turn the work light off.

Parts Associated with This Feature:

PART NUMBER	DESCRIPTION
WORK LIGHT CONNECTOR (CHASSIS HARNESS)	
1661778C1	2-WAY CONNECTOR BODY
1661875C1	WIRE TERMINAL 16-GAUGE
1661874C1	CONNECTOR LOCK
1661872C1	WIRE TERMINAL SEAL 16-GAUGE
WORK LIGHT MATING CONNECTOR (BODY BUILDER HARNESS)	
3543888C1	2-WAY CONNECTOR BODY
1661874C1	CONNECTOR LOCK
1667742C1	WIRE TERMINAL 16-GUAGE
1661872C1	WIRE TERMINAL SEAL 16-GAUGE

MULTIPLEX SWITCH-PACK PARTS	
4057689C1	HOUSING, SWITCH 6-PACK DIN MULTIPLEX
4102405C1	POSITION 3-POSITION MONOSTABLE “MOMENTARY” WORK LIGHT SWITCH ACTUATOR
BODY CONTROL MODULE J1/J6 CONNECTOR PARTS	
3598711C1	12-WAY CONNECTOR BODY J1 (1603)
3573833C1	12-WAY CONNECTOR LOCK J1 (1603)
3544878C1	WIRE TERMINAL 12/14-GAUGE J1 (1603)
3544877C1	WIRE TERMINAL 14/16-GAUGE J1 (1603)
3544876C1	WIRE TERMINAL 16/18-GAUGE J1 (1603)
3544875C1	WIRE TERMINAL 18/20-GAUGE J1 (1603)
3544878C1	18-WAY BODY CONTROLLER J6 (1606/2023) CONNECTOR WIRE TERMINAL 12-14-GAUGE [GT280]
3544877C1	18-WAY BODY CONTROLLER J6 (1606/2023) CONNECTOR WIRE TERMINAL 14/16-GAUGE [GT280]
3544876C1	18-WAY BODY CONTROLLER J6 (1606/2023) CONNECTOR WIRE TERMINAL 16/18-GAUGE [GT280]
3544875C1	18-WAY BODY CONTROLLER J6 (1606/2023) CONNECTOR WIRE TERMINAL 18/20-GAUGE [GT280]
3544884C1	18-WAY BODY CONTROLLER J6 (1606/2023) CONNECTOR WIRE TERMINAL 16/18-GAUGE [GT150]
3544883C1	18-WAY BODY CONTROLLER J6 (1606/2023) CONNECTOR WIRE TERMINAL 20/22-GAUGE [GT150]

Parts Associated with Work Light Feature

How to Test This Feature:
1. Activate work light switch.
2. Verify that pin G (labeled Work Light) on the Body Controller (BCM) connector (#1603) is providing battery voltage.
3. Verify that the work light (or alternate load) is functioning properly.
4. Turn work light switch OFF.
5. Verify that the work light output goes OFF.

Note: This feature uses body controller-based software controls which can be diagnosed with The International® Diamond Logic® Builder software (see local dealer if not owned).

References:
Refer to the applicable International® Circuit Diagrams and Service Manuals.

41.17. 08XBK: SWITCH, AUXILIARY Switch 40-AMP Circuit for Customer Use; Includes Wiring Connection in the engine compartment near the mega-fuse.

Feature Applicability to Vehicle Platforms:

- Heavy Vocational (HV)
- Medium Vocational (MV)
- Heavy Extreme (HX) 2021 and Newer

Extended Description: Feature code 08XBK provides a 40-Amp accessory feed for customer use. An in-cab rocker switch controls the circuit. A blank windowed two position latching switch is provided with this feature along with a graphic overlay kit that allows custom labeling of the switch function.

System Block Diagram:

Body Controller Software Feature Codes:

597310 - BCM PROG, SWITCH AUX 40-AMP

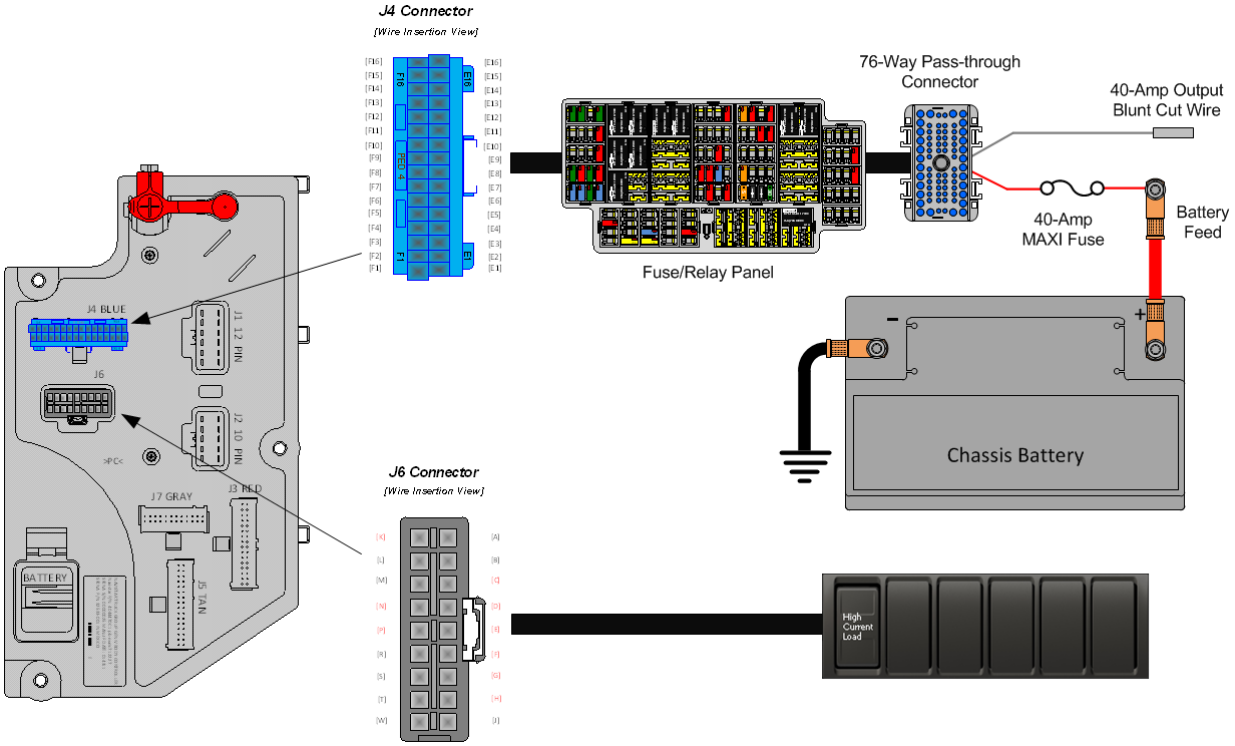

Parts Associated with This Feature:

PART NUMBER	DESCRIPTION
MULTIPLEX SWITCH-PACK PARTS	
4057689C1	HOUSING, SWITCH 6-PACK DIN MULTIPLEX
4102431C1	SWITCH, ELECTRONIC, BLANK WINDOW ROCKER - 2 POS - BISTABLE
3534204C1	FUSE, MAXI, 40 AMP
3525613C1	MAXI FUSE HOLDER
3614762C1	MAXI FUSE HOLDER TERMINAL 12 GAUGE WIRE
3515522C1	MAXI FUSE HOLDER TERMINAL 10GAUGE WIRE
3541256C1	TERMINAL SEAL
3515524C1	FUSE HOLDER COVER

Parts Associated with Fuse and Switch Feature

How to Test This Feature:
To test this circuit, verify that battery voltage is present at the wire provided when the in-cab switch is activated with the IGN key in the on or accessory position. The green indicator in the rocker switch shall be illuminated when the output is on.

Note: This feature uses body controller-based software controls which can be diagnosed with The International® Diamond Logic® Builder software (see local dealer if not owned).

References:
Refer to the applicable International® Circuit Diagrams and Service Manuals.

42. Appendix - General Electrical Section:

Description - International® vehicle electrical systems are becoming increasingly complex with the addition of a BCM, electronically driven instrument gauges, and Antilock Brake Systems (ABS) to name a few. While most systems still operate on battery voltage (12 volts), some systems operate at as high as 700 volts (battery powered vehicles) and as low as five (5) volts (pressure sensors).

International® publishes Electrical Circuit Diagrams and Service Manuals for all its models. Body builders and installers should refer to these manuals before connecting body lights and accessories to the vehicle electrical system to assure that circuits chosen are both appropriate and not overloaded. Modifications not defined in the circuit diagram book are not to be made to the vehicle electrical/electronic control systems without first contacting International's Technical Service Department at 1-800-336-4500.

42.1. J1939 HIGH SPEED DATA LINK (SAE J1939/15)

The information in this section applies to all severe and medium vocational series models.

Performing the proper repairs or modifications of the J1939 circuits is critical to maintaining the integrity and performance of the vehicle systems. (For repair procedures, see the Data Link Repair section in this manual.) This information is based on SAE J1939/15 and TMC RP 142 .

These instructions are intended for modifications that meet the SAE spec, i.e., no internal resistor. When extending the backbone, the proper materials must be used. The data link cable consists of a twisted pair of insulated wires and are covered by an insulating jacket. The data link cable must meet the SAE - specified characteristic impedance of 120-ohms. Never splice regular automotive type wire such as GXL, SXL, TXL into the data link cable. Use data link cable furnished by Raychem, part number 2021D0309.

The backbone is the main part of the cable. This is terminated at each end with a 120-ohm resistor. When adding a device, the backbone must be extended. This is done by removing the resistor, inserting the backbone extension, then plugging the resistor and the device into the extension.

J1939:

J1939 is a high-speed serial communications data link. The system requires two terminating resistors. The wire between these two resistors is called the backbone. The backbone cannot be longer than 131.2 feet (40m). A module can tap into the backbone. This point is called the Node. The distance between two nodes cannot be less than 3.9

inches (0.1m). The cable length from the node to the module cannot be longer than 9.8 feet (3m).

Terminating Resistor Part Numbers:

Current resistors APTIV

Resistor	15429045 / Navistar 3769112C91
Connector	13510085 / Navistar 3683465C1
Terminal	15326427 / Navistar 3683464C1
Cable seal	15366060 / Navistar 3535424C1
CPA	15317832 / Navistar 3573833C1
Conn. Lock	15355128 / Navistar 3683466C1

PKC replacements

Resistor	E-3375-021	Navistar part # 4222608C91
Connector	E-2238-002	Navistar part # 4222609C91
Yazaki terminal	7114-4103-08 (gold)	Navistar part # 3834459C1
Cable seal	E-1644-02.	Navistar part # 3600058C1

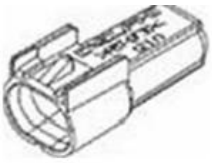

15429045
2 Way Black GT 150 Sealed Male Connector Assembly, Max Current 15 amps

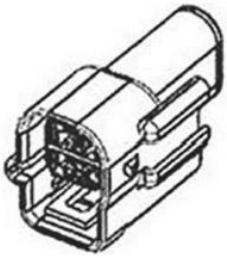

120 ohm cap
E3375-021





13510085
2 Way Black GT 150 Sealed Female Connector Assembly, Max Current 15 amps

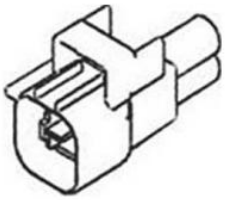

Mating Connector
E-2238-002



42.2. Wire Splicing and Termination - Standard Terminals and Splices:

Standard Terminals

1. Cut the cable just before the insulation wings on the terminal.
2. Remove the insulation, being careful not to cut any of the wire strands.
3. Position cable in the new terminal.
4. Hand crimp the core wings first, then the insulation wings.

Note: Always use the recommended crimp tool for each terminal. A detailed crimp chart is included in the repair kit.

5. Solder all hand crimped terminals and electrically check for continuity.

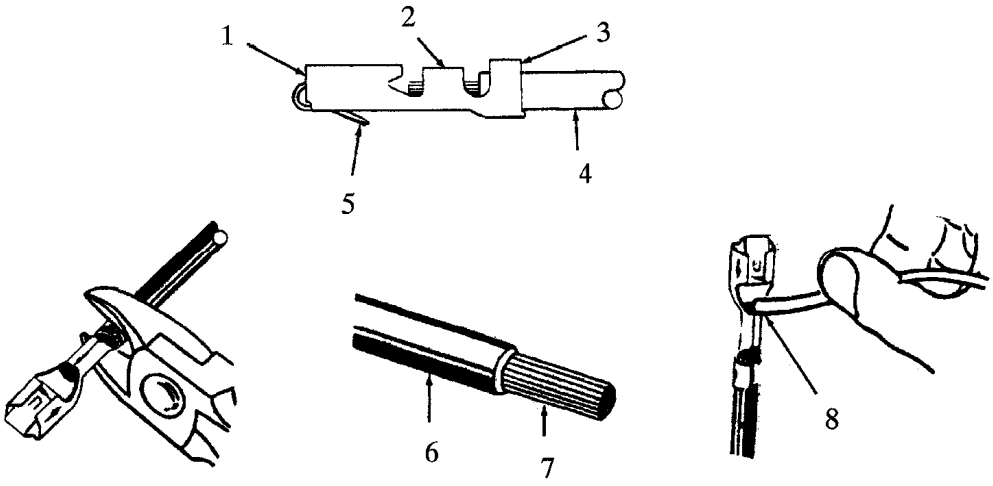

Standard Terminal

1. MATING END
2. CORE WINGS
3. INSULATION WINGS
4. CABLE
5. LOCK TANG
6. INSULATION
7. WIRE STRANDS
8. SOLDER

Splice Inspection:

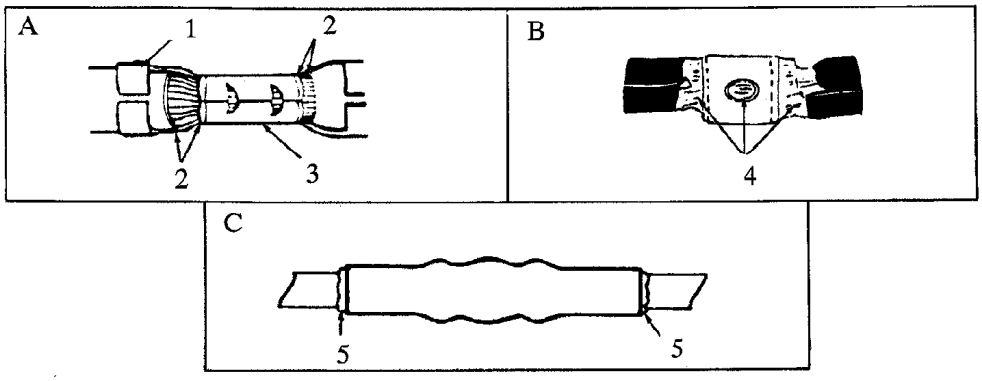

Splice Inspection

A. TERMINAL APPLICATION
1. INSULATION CRIMP
2. WIRE STRANDS VISIBLE IN THIS AREA
3. CORE CRIMP
B. SOLDER APPLICATION
4. GOOD SOLDER APPLICATION

C. CRIMP AND SEAL HEAT APPLICATION
5. EVIDENCE OF GLUE

Splice Clip Installation
NOTE - A new clip must be located a minimum of 1.5 inches (40 mm) from a connector, sleeve, or another clip.

1. Cut off the old clip or bad section of wire.

2. Remove the insulation being careful not to cut any of the wire strands.

3. Install the proper clip on the wire strands.

4. Hand crimp the clip until securely fastened.

5. Solder the clip and electrically check for continuity.

6. Cover the entire splice with splice tape. Extend the tape onto the insulation on both sides of the splice(s).

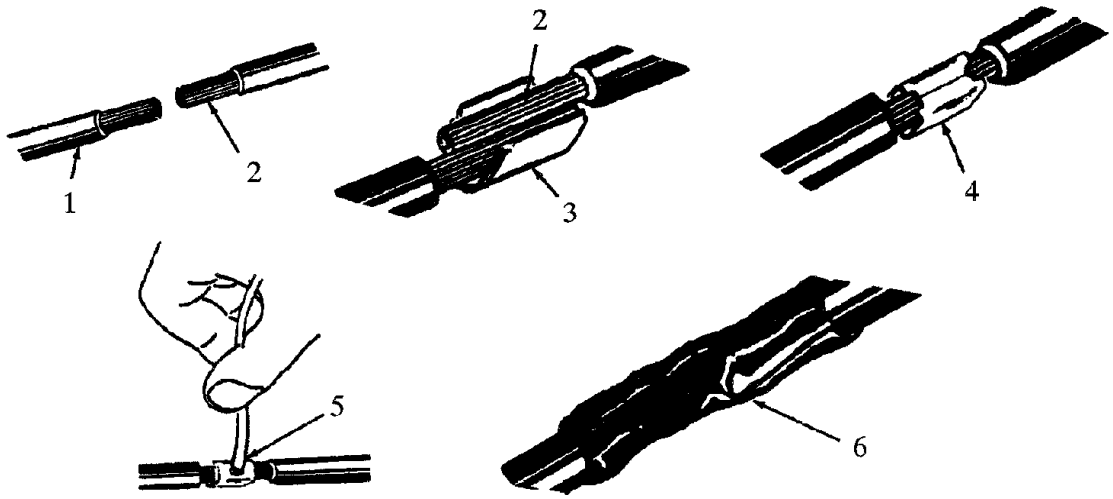

Splice Clip Installation

1. INSULATION
2. WIRE STRANDS
3. CLIP (POSITIONED CORRECTLY)
4. CRIMPED CORRECTLY
5. SOLDER
6. TAPE

Crimp and Seal Splice Sleeve Installation:
Parts Information:

Part Number	Description	Quantity

3517501C1	12-10 AWG Splice	2
3517502C1	16-14 AWG Splice	7
3517503C1	22-18 AWG Splice	2
2644000R1	Dual Wall Heat Shrink, 50mm	50

Note: A new sleeve must be located a minimum of 1.5 inches (40 mm) from a connector, clip, or another sleeve.

1. Cut off the old sleeve or bad section of the wire.

2. Remove insulation being careful not to cut any of the wire strands.

3. Install the proper sleeve on the wire strands, making sure the ends of the wire hit the stop.

4. Hand crimp to the sleeve. Gently tug on the wire to make sure that they are secure.

Note: Always use the recommended crimp tool for each sleeve. A detailed crimp chart is included in the Repair Kit.

CAUTION - Use an appropriate heat gun. Do not use a match or open flame to heat the sleeve seal.

5. Electrically check the sleeve and wire cable for continuity.

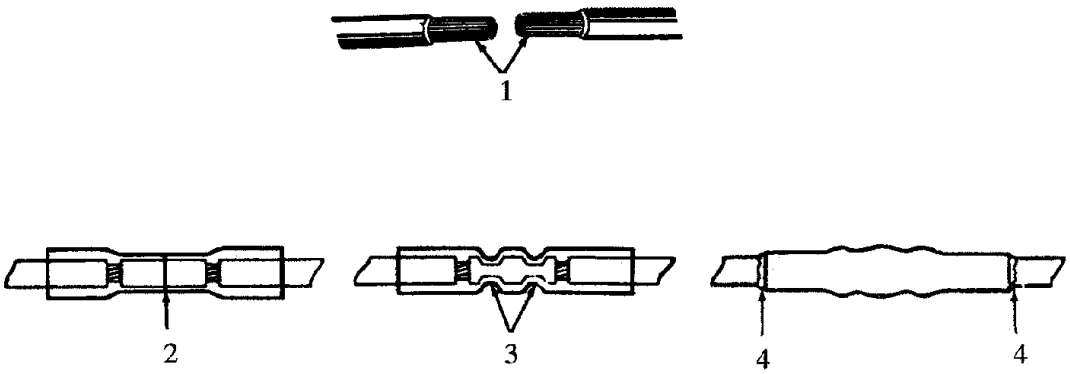

Crimp and Seal Splice Sleeve Installation

1. WIRE STRANDS
2. WIRE STOP
3. CRIMP CONNECTOR
4. EVIDENCE OF GLUE

Data Link Repair:

J1939/11 Shielded Only
Repairs to damaged J1939 circuits should be accomplished using identical types of wiring. Splices should be crimped, soldered, and covered with heat shrink. Ensure the twist in the wire pair is maintained and that any wire bundles in the engine compartment are shielded and covered with heat shrink.

Wire Repair
This instruction addresses termination and splicing of J1939 wire.

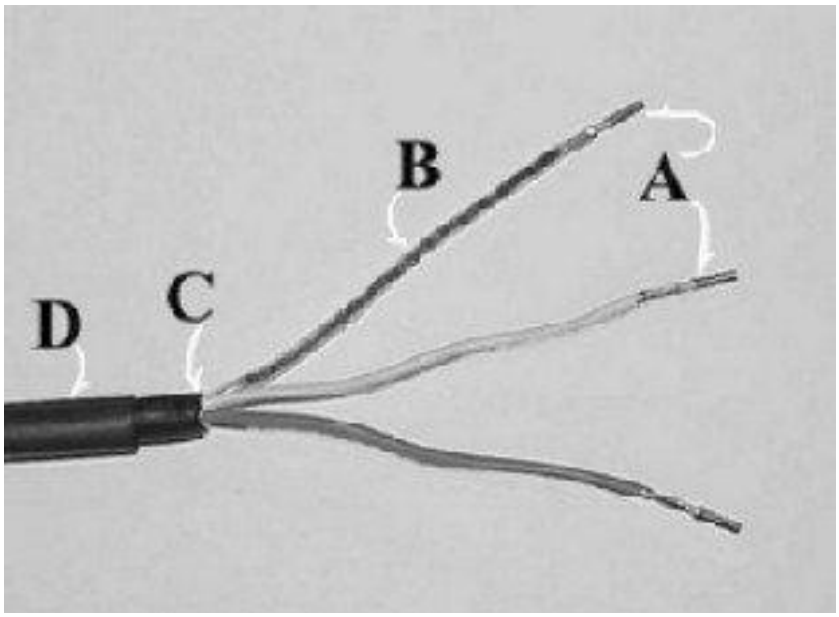

Preparation of J1939 Wire for Connection

1. Strip back (view C) outer shield 3 1/8 in. (76 mm).

2. Strip (view A) green wire and yellow wire 1/4 in. (6.35 mm) being careful not to cut individual strands.

3. Re-twist all three wires if they have separated.

4. Sleeve drain wire (view B) may be soldered to aid in sleeving.

5. Install terminals on green and yellow wire ends, and crimp.

6. The 1/4" heat shrink tube (view D) will be shrunk later after the wires have been inserted into the crimp connector.

Wire Splicing

1. Strip wire ends 1/4 inch.

2. Re-twist any loose wires.

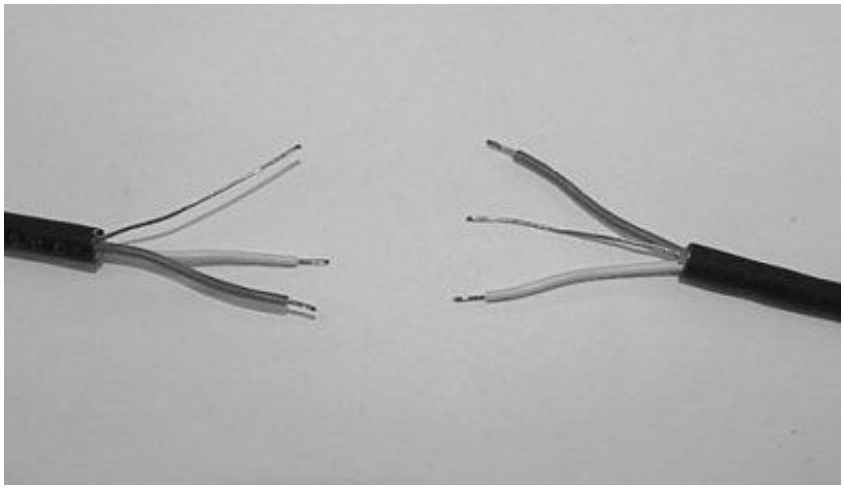

Re-Twist Any Loose Wires

3. Slide 2-inch pieces of heat shrink tube over wire for later use.

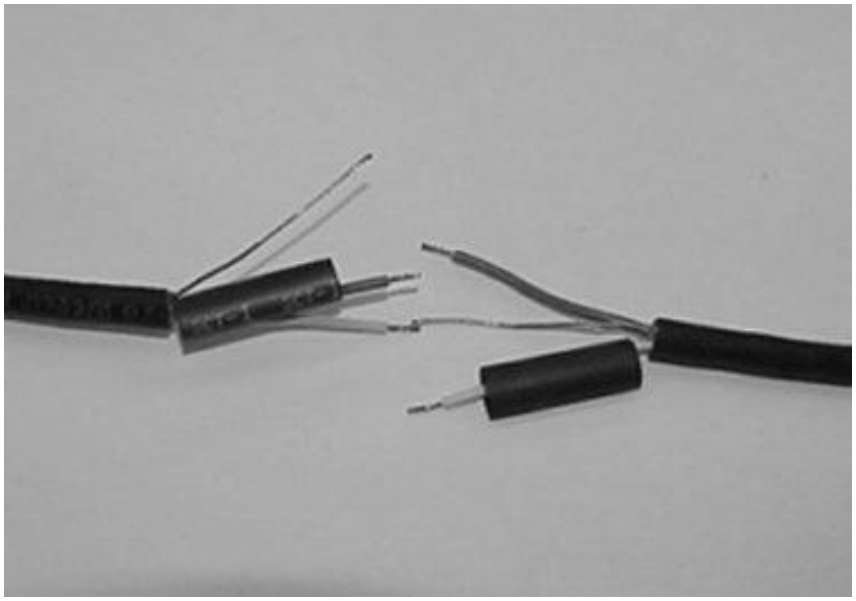

Put Heat Shrink Tube Over Each Wire

4. Put heat shrink tube over each wire.

5. Insert ends of wires into splice joint and crimp.

6. Solder the wires and crimp joint together.

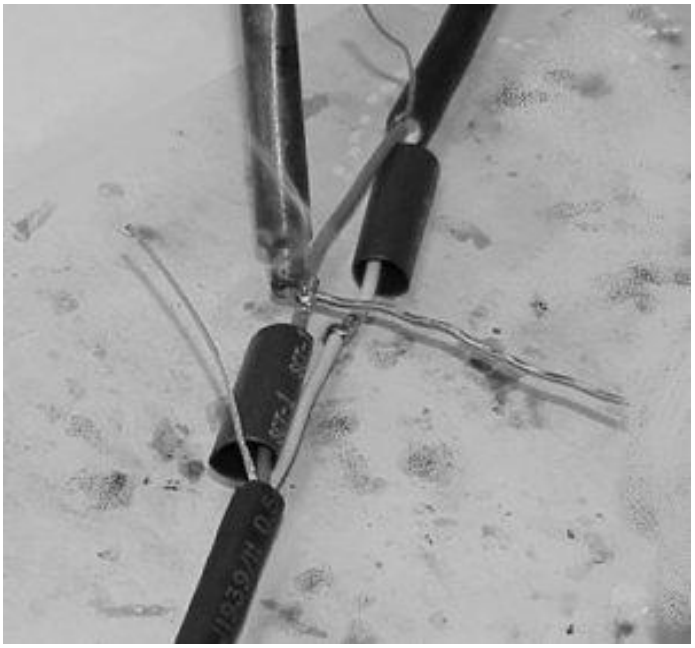

Solder Wires Together

7. Center heat shrink tube over splice and shrink.

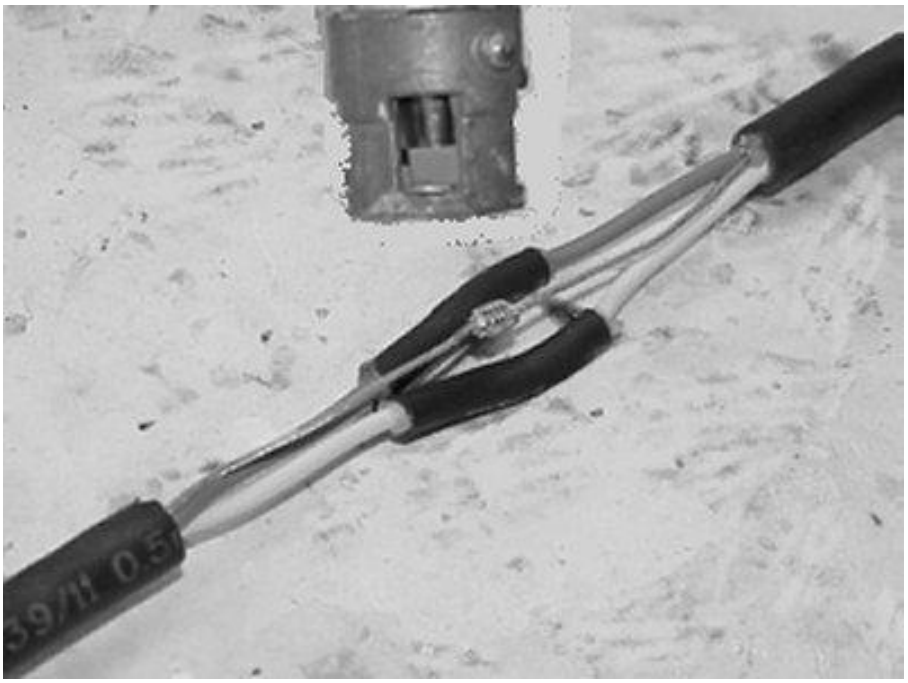

Center Heat Shrink Tube Over Splice

8. Wrap wires with foil tape. Maintain at least 1/2 wrap overlap.

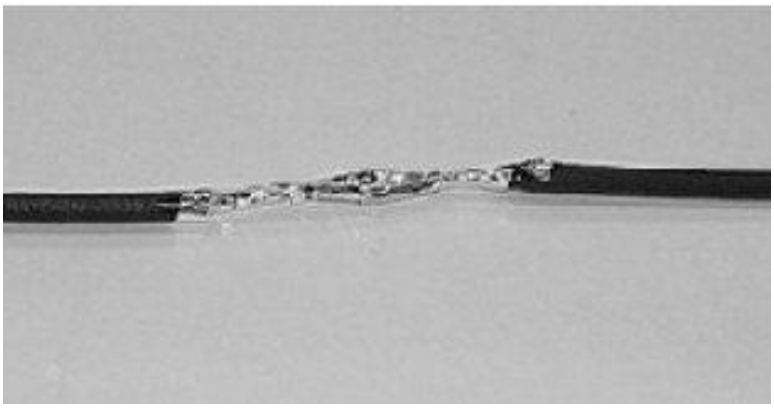

Center Heat Shrink Tube Over Cable

9. Center heat shrink tube over the splice and shrink.

42.3. Using Additional Batteries on a Vehicle.

Do not use lead acid batteries on vehicles that already have AGM batteries.

Key Points to Consider:

Charging Requirements: AGM batteries require a steady flow of current, while lead acid batteries are better suited for a pulsed current. This difference can lead to improper charging and reduced battery life if battery types are mixed.

Discharge Characteristics: The two types of batteries have different discharge rates. AGM batteries tend to discharge more quickly than lead acid batteries when used together.

Cost: AGM batteries are typically more expensive than lead acid batteries. Mixing battery types can increase the overall cost without providing significant benefits.

42.4. “Red Gel Coating” Removal from Starter Studs and Electrical Connections

The following provides information on how to properly soften and remove the 'Red gel coat' from ground studs and any other electrical connections that are covered with this protective coating. This will greatly ease the disassembly of these connections, preventing stud/nut damage caused by using too much force to overcome the gel coat.

SPECIAL TOOL(s) / SOFTWARE

Tool Description	Tool Number	Comments	Instructions
Standard Wire Brush	N/A	Source Locally	
Small Scraper	N/A	Source Locally	
Small Paint Brush	N/A	Source Locally	
Small, metal cup/bowl/container	N/A	Source Locally	

SERVICE PARTS INFORMATION

NOTE – After the container has been opened, it should be used within 6 months. Potency will decrease after 6 months.

Description	Part Number	Quantity Required
Blue Bear 600GL Coating Softener/Remover	BBISG1GEANDT1 or BBISGQTEANDT1	1 (1 Quart)

Mineral Spirits	N/A	1 container
Grafo Dielectric Grease or Tribo Tuff Blue Dielectric	Grafo - 472141C2 Tribo Tuff - 2519646C1	1 container



REPAIR STEP(s)

Warning - To prevent property damage, personal injury and/or death, park vehicle on a hard, flat surface, turn the engine off, set the parking brake, and install wheel chocks to prevent the vehicle from moving in either direction.

Warning – To prevent property damage, personal injury, and/or death, if the vehicle must be raised, do not work under the vehicle supported only by jacks. Jacks can slip or fall over.

Warning – To prevent personal injury and/or death, always wear safe eye protection when performing vehicle maintenance.

Warning – To prevent property damage, personal injury, and/or death, keep flames or sparks away from vehicle and do not smoke while servicing the vehicle's batteries. Batteries expel explosive gases,

Warning - To prevent property damage, personal injury, and / or death, remove the ground cable from the negative terminal of the battery box before disconnecting any electrical components. Always connect the ground cable last.

Caution - Wear chemical-resistant gloves and safety glasses while applying. Respiratory masks may be considered to avoid inhaling any vapors. Avoid contact with painted surfaces or any surface not coated with the Red gel. See MSDS sheet for more safety info.

REMOVAL PROCEDURE:

1. Install Wheel Chocks
2. Obtain Service Information for proper procedure on batt. disconnect, starter and/or ground stud(s) removal.
3. Obtain Service Part(s)
4. Obtain Service Tool(s)

IMPORTANT – Refer to the warnings and directions provided with the product.

5. Shake the Gel Softener container well to homogenize the contents and open the container slowly
6. Pour the required amount of chemical into a small metal container. Using a paint brush, apply liberally on to red coated threads, nuts, and studs (metal surfaces). See **Figure #1** and **Figure #3**. Avoid dripping onto other surfaces. DO NOT apply to rubber, wire insulation etc. Only use this on metallic surfaces.
7. Let sit for 10-15 minutes to allow chemical to soften the Red coating.

Note: A longer set time will yield better results.

8. Use a scraper, wire brush and rag to remove as much coating as possible. See **Figure #2.** A second application of the softener chemical may be required - use discretion prior to loosening nuts/studs.
9. To remove remaining finish or residues, use abrasive pad or cloth dipped in odorless mineral spirits.

REASSEMBLY PROCEDURE:

1. Remove any excess Red Gel Coat on mating surfaces of eyelet connectors, nuts, washers, threads, or any contact surface that may disrupt continuity, BEFORE reassembly.
2. After referencing the manual and repairs are complete, reconnect batteries per the standard procedure called out in the manual and apply 'Grafo' or 'Tribo Tuff Blue' dielectric grease to any of the connections removed, that originally contained the red coating.
3. Work areas and tools can be cleaned w/ mild degreaser and/or detergent/soap and water. Wash hands with cold water and soap.
4. Disposal: Any unused Gel Softener remaining in the small metal container, should be placed outdoors to evaporate and dry. Once dry, the container can be cleaned with degreaser or mineral spirits.

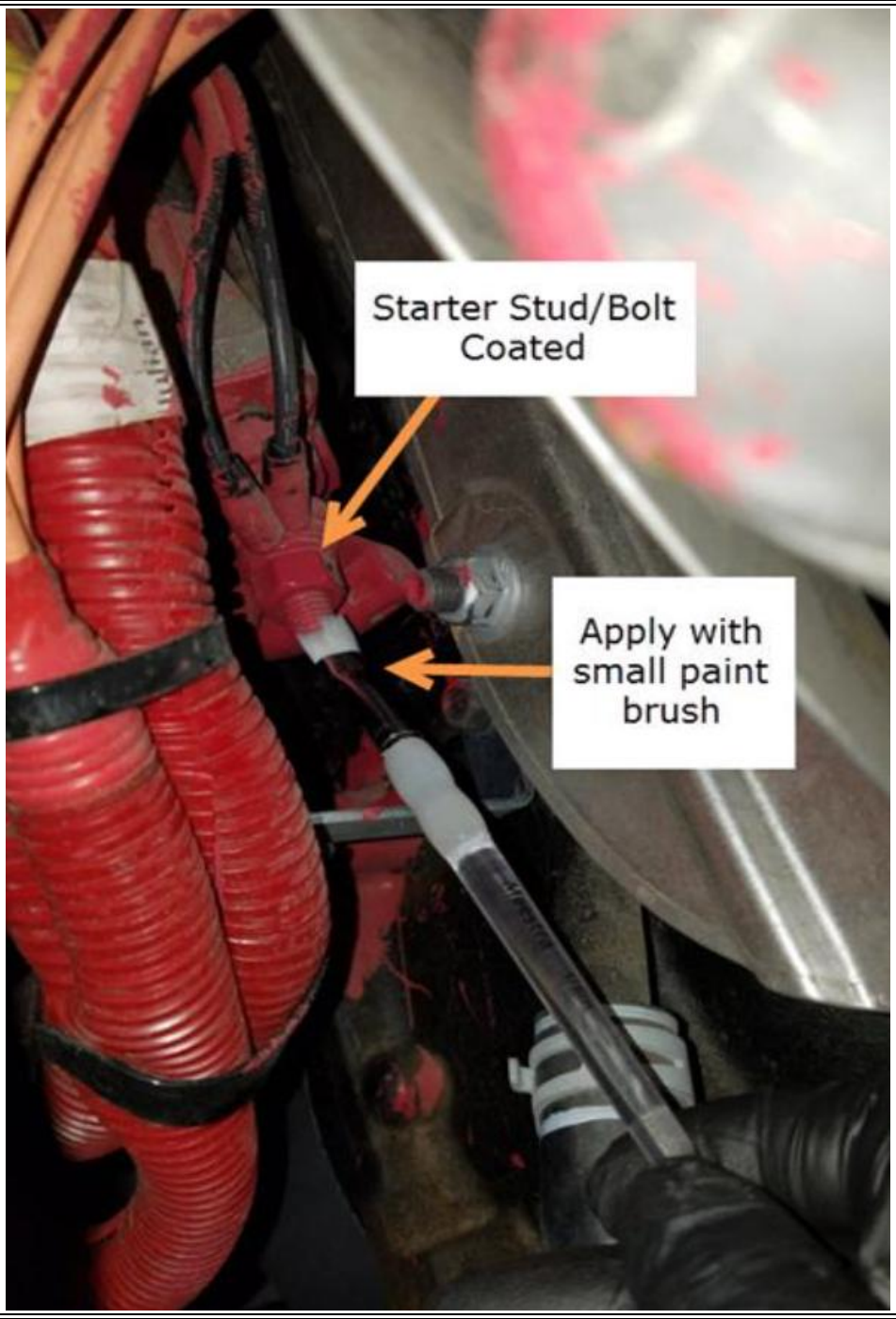

Figure #1: Starter Stud Application



Figure #2: Coating Thinned/Removed via Wire Brush/Scraper



Figure #3: Applying Softener Gel to Firewall Ground Studs

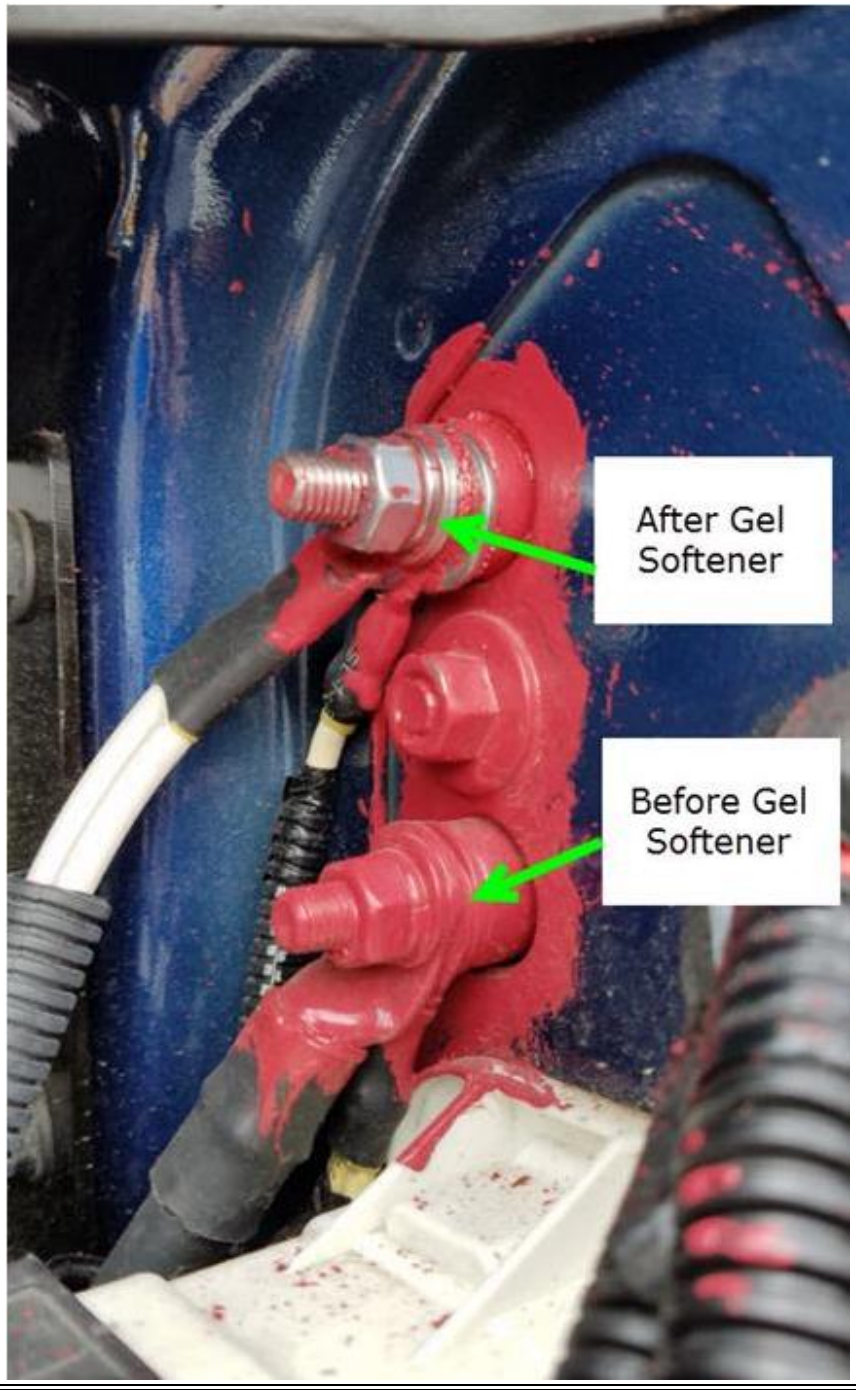

Figure #4: Dash Panel Ground Studs - Before and After

42.5. Connecting to 12 Volt Circuits

Connecting to 12-volt circuits can be a straightforward process if you follow some key steps. Here is a general guide to help you get started:

1. **Identify the Power Source**:
   Using the circuit diagrams, locate a desired battery fed, ignition fed or accessory fed 12-volt power source.
   Also ensure the power source can handle the additional load of the new circuit. Ensure that any added circuits will not induce parasitic loads that will unintentionally drain the batteries.
2. **Choose the Right Wiring**:
   Use appropriate gauge wire for the current draw of your devices[1].
3. **Install a Fuse**:
   Always install the fuse close to the power source to protect the circuit. The fuse rating should be slightly higher than the maximum current draw of your devices.
4. **Run the Wires**:
   Route the wires from the power source to the location of your accessory. Use wire loom or conduit to protect the wires from abrasion and heat.
5. **Ground the Circuit**:
   Connect the negative wire to a good chassis ground. Clean the grounding point to ensure a solid connection.
6. **Test the Circuit**:
   Before finalizing the installation, test the circuit to ensure everything is working correctly. Use a multimeter to check for proper voltage and continuity.

42.6. Recommended Circuit Protection

Adding fuses to 12-volt circuits is crucial for protecting your electrical system from overcurrent that can cause damage. Here are some standard practices to follow:

1. **Determine the Correct Fuse Size**:
   Calculate the maximum current draw of your circuit by adding up the current ratings of all devices connected to it. Use a fuse rated at approximately 125% of the normal operating current to allow for safe operation without unnecessary blowing of the fuse.
2. **Fuse Placement**:
   Place fuses as close to the power source as possible to protect the entire length of the circuit.
   Each individual circuit should have its own fuse to provide targeted protection and simplify fault troubleshooting.

3. **Types of Fuses**:

Use the appropriate type of fuse for your application. Common types include blade fuses, glass tube fuses, ceramic fuses, and circuit breakers.
For high-current applications like starter motors, consider using fusible links or circuit breakers instead of standard fuses.

4. **Installation Tips**:
   Ensure the fuse is compatible with the fuse holder and that connections are secure.
   Regularly inspect fuses for signs of damage or corrosion and replace them with the exact type and rating if they blow.
5. **Safety Considerations**:
   Always disconnect the battery or power source before working on the circuit.
   Avoid using a fuse with a higher rating than recommended, as this can prevent the fuse from blowing during an overcurrent situation, potentially causing damage.

Circuit Protection by Wire Gauge:

WIRE GAUGE	PROTECTIVE DEVICE SIZE	MAXIMUM CURRENT (AMPS)
18-GUAGE	10 AMP FUSE/ CIRCUIT BREAKER	8 A
16-GUAGE	15 AMP FUSE/ CIRCUIT BREAKER	12 A
14-GUAGE	20 AMP FUSE/ CIRCUIT BREAKER	16 A
12-GUAGE	25 AMP FUSE/ CIRCUIT BREAKER	20 A
10-GUAGE	30 AMP FUSE/ CIRCUIT BREAKER	24 A
8-GUAGE	12 GAUGE FUSIBLE LINK	80 A
6-GUAGE	10 GAUGE FUSIBLE LINK	108 A
4-GUAGE	2–12 GAUGE FUSIBLE LINK	160 A
CAUTION – Wire gauge is designed to match fuse / circuit breaker ratings. Do not increase the size of a circuit breaker or fuse. This might cause wiring to overheat.		

Circuit Protection by wire Gauge Table

Circuit Protection Devices - Fuses and Circuit Breakers:

PART NUMBER	DESCRIPTION	SIZE	COLOR
CIRCUIT BREAKERS			
3536177C1	TYPE III — MANUAL RESET	7.5 A	BROWN
3536178C1	TYPE III — MANUAL RESET	10 A	RED
3536179C1	TYPE III — MANUAL RESET	15 A	BLUE
3536180C1	TYPE III — MANUAL RESET	20 A	YELLOW
3536181C1	TYPE III — MANUAL RESET	25 A	WHITE
3536182C1	TYPE III — MANUAL RESET	30 A	GREEN
3529688C1	TYPE III - MINI	20 A	YELLOW
3529690C1	TYPE III - MINI	30 A	GREEN
THERMAL FUSES			
3534208C1	MINI — SAE J2077	5 A	TAN
3546109C1	MINI — SAE J2077	7.5 A	BROWN

3534209C1	MINI — SAE J2077	10 A	RED
3534210C1	MINI — SAE J2077	15 A	BLUE
3534211C1	MINI — SAE J2077	20 A	YELLOW
3534212C1	MINI — SAE J2077	25 A	NATURAL
3534213C1	MINI — SAE J2077	30 A	GREEN
131224C1	AUTOFUSE	20 A	YELLOW
571691C1	AUTOFUSE	30 A	GREEN
INLINE SOCKET AND CABLE FOR CIRCUIT BREAKER/FUSE			
1676841C91	INLINE SOCKET WITH CABLE	20 A	BLACK
1682115C91	INLINE SOCKET WITH CABLE	30 A	BLACK

Fuse and Circuit Breaker Protection Device Table

42.7. Color Code System for International® Truck Wiring:

Wiring Color Code System:

COLOR	DESCRITION
RED	BATTERY FEEDS
PINK	IGNITION FEEDS
LIGHT BLUE	ACCESSORY FEEDS
YELLOW	HEADLIGHT SYSTEM (DAYTIME RUNNING LIGHTS, FOG, HI-BEAM, ETC.); DATA LINK J1939 (+)
DARK BLUE	INTERIOR LIGHTS (DOME, PANEL, ETC.); DATA LINK J1708 (+)
BROWN	EXTERIOR LIGHTS (TAIL, MARKER, CLEARANCE, ETC.)
ORANGE	EXTERIOR LIGHTS (TURN, BACK-UP, ETC.)
GRAY	CHASSIS SYSTEMS (HORN, ETC.);
TAN	CHASSIS MONITORING SYSTEMS (GAUGES)
GREEN	DATA LINK J1939 (-)
LIGHT GREEN	DRIVER AID SYSTEMS (WINDSHIELD WASHER, HEATER, ETC.)
VIOLET	CONTROLS - ELECTRONIC
WHITE	GND
BLACK	BATTERY GND CABLES OR COMPUTER DATA LINK SYSTEMS
Note: The wiring in multiple conductor jacketed cable does not follow the above color code system. see the electrical circuit diagram manual for specific colors and circuit numbers used with each system. use only “GXL", “SXL" or “TXL" insulated wire. crimp and solder all connections.	

Wiring Color Code Table

42.8. Electrical Components Commonly Used by Equipment Installers: Components Table:

PART NUMBER	DESCRIPTION
AT FUSE BLOCK	
3536294C1	TERMINAL, FUSE BLOCK (18/20 GAUGE)
3573312C1	TERMINAL, FUSE BLOCK (14/16 GAUGE)
3573311C1	TERMINAL, FUSE BLOCK (10/12 GAUGE)
AT TAILLIGHTS	
589390C1	SEAL, WIRE - (BLUE) .165-.138 O.D. CABLE (12-14 GAUGE)
589391C1	SEAL, WIRE - (GRAY) .137-.111 O.D. CABLE (14-16 GAUGE)
1652325C1	SEAL, WIRE - (LT GN) .110-.080 O.D. CABLE (16-20 GAUGE)
1661375C2	BODY CONNECTOR, 5-WAY MALE
1661377C1	TERMINAL, FEMALE - 14/16 GAUGE
1661376C1	LOCK, 5-WAY MALE CONNECTOR
1677851C1	BODY CONNECTOR, 5-WAY FEMALE
1671609C1	TERMINAL, MALE - 14/16 GAUGE
1677914C1	LOCK, 5-WAY FEMALE CONNECTOR
587579C1	SEALING PLUG (FOR EMPTY CONNECTOR CAVITIES)
Note: Any unused circuit cavities must be plugged with the sealing plugs provided with the chassis harness.	

Commonly Used Electrical Integration Small Components Table

42.9. Suppression

International® strongly recommends electromagnetic devices be electrically suppressed, when adding devices such as relays, magnetic switches, and solenoids.

Unsuppressed electromagnetic devices can generate large voltage spikes which are conducted into the vehicle electrical system. These voltage spikes may adversely affect customer added electronic devices and in some instances may affect International installed electronic components.

This requirement applies to BCM and RPM inputs and outputs that are connected to electromagnetic devices, such as solenoids, relays, motors, and coils.

When installing electromagnetic devices, specify suppressed units. If suppressed units are not available, diode suppression may be added as shown below:

The following suppressed relays and magnetic switches are available from International.

Suppressed Relays and Magnetic Switches:

PART NUMBER	DESCRIPTION
1691520C91	MAGNETIC SWITCH - CONTINUOUS DUTY (SUPPRESSED) 100 AMP
1693479C91	MAGNETIC SWITCH - INTERMITTENT DUTY (SUPPRESSED) 100 AMP
3519350C1	MICRO RELAY – SPDT (SUPPRESSED), NO – 20 AMP, NC – 10 AMP

42.10. Welding Information

Electric Welding on the electric vehicle is not recommend. The exception is welding performed at the rear end of the frame to accommodate lift gate installations.

Whenever electric welding is done on any part of the vehicle, it is not necessary to disconnect the International electronic modules in the cab such as the BCM, RPM, and the instrument cluster. The welder's GND must be connected as close to the weld as possible. Disconnect both the positive (+) and the negative (-) battery cables including the electronic power feeds prior to electric welding. If it is necessary to weld close to an electronic component, it is recommended that the component be temporarily removed.

Devices should also be covered with a protective blanket to prevent splatter from damaging any components.

Consult manufacturer’s instructions for all other electronic modules such as Bendix ABS and WABCO ABS.

42.11. Routing Guidelines

Any hosing, tubing, battery cable, wiring or electrical harness must not rub on a sharp edge. However, due to the high abrasion resistance of synflex tubing, it is permissible for synflex tubing to make contact with the lower edge of the frame rail flange when the tubing is making the transition from the outside to down and under the rail. This does not mean that proper clearance or the need for protective wrap is not needed when synflex line contacts sharp edges or threaded fasteners.

Any hosing, tubing, battery cable, wiring or electrical harness must not rub or make contact with a hot surface.

Nothing should rub or make contact with the copper compressor discharge tubing other than the clamp(s) that support it.

All hosing, tubing, battery cables or electrical harnesses should be supported at least every 18" to 20".

Strap locks used to directly clamp, or support battery cables or main engine wiring harnesses must be no less than 7/16" in width.

Strap locks are not to be used on any bulk hose materials (heater hoses, make-up lines, etc.).

Strap locks are not to be used on any Orange high voltage circuits or conduit.

Route and Clip Recommendations:

Electrical Harness:

PROBLEM	REQUIREMENT
SHARP OR ABRADING SURFACE	NO CONTACT
TENSION ALONG HARNESS/WIRES/HOSE	NONE
DISTANCE FROM MOVING PARTS	1”
CONNECTOR CLIPPED TO AVOID DAMAGE	YES
CONNECTORS ARE SEALED	YES
MAX EYELETS PER STUD	3
HARNESS PROTECTED FROM DAMAGE	YES
DRIP POINT FOR HARNESS	YES
DISTANCE OF HARNESS TO FLAMMIBLE FLUIDS	1/2”
HARNESS LOCATION TO FLAMMIBLE FLUIDS	NOT DIRECTLY UNDER
BATTERY CABLES TO FLAMMIBLE FLUIDS	1” MINIMUM
BATTERY CABLE TO CONDUCTIVE SURFACE	1/2” MINIMUM
BATTERY CABLE TIE STRAP	1/2” (250 POUND) WIDE
HARNESS CONTACT WITH METAL SURFACE	NO RELATIVE MOTION
P-CLAMPS – ELECTRICAL	CUSHIONED ONLY
P-CLAMPS FASTENING SUPPORT	NO CANTILEVER
HIGH PRESSURE PIPE/HOSE (>200 PSI)	DON’T CLIP ANYTHING TO THEM
HARNESS THROUGH METAL HOLES	USE GROMMET
FULL ARTICULATED POSITION	OPERATES WITH OUT DAMAGE
CLIPPING FIXED MAX DISTANCE - HARNESS	14”
SPLICES	USE SHRINK WRAP

42.12. HIGH VOLTAGE CIRCUITS (GREATER THAN 50 VOLTS) ON INTERNATIONAL® TRUCKS AND BUSES:

WARNING – To avoid property damage, personal injury, or death, refer to the manufacturer's service information before working on any high voltage equipment. By definition, high voltage circuits and components contain voltage levels that may cause equipment damage, electrical shock, and/or electrocution if handled incorrectly.

Only a trained technician may perform service inside high voltage components. When working around or maintaining high voltage circuits, please seek high voltage training.

Note: The intent of this section is to provide some basic guidelines when working on or around International® vehicles that are equipped with high voltage electrical equipment and circuits. For specific instructions, maintenance, or service information on specific equipment or options, refer to the service manuals for the specified truck models and

component(s). It IS NOT the intent of this section to provide detailed service instructions for high voltage equipment and circuits.

Only a trained technician may perform service inside high voltage components. If working around or maintaining high voltage circuits, please seek high voltage training.

High voltage systems require the maintainer to be familiar with two types of electrical systems.

DC (Direct Current)

Most DC systems on today's trucks use 12volt negative GND. Some systems can store DC electricity in batteries with operating voltages as high as 600 DC volts.

AC (Alternating Current)

The main difference between AC and DC systems is that the voltage levels in DC systems remain constant while the voltage levels in AC systems are constantly changing. When measuring an AC system, it is important to know that the average voltage is zero, and that is why ***A VOLTMETER SET TO DC WILL NOT INDICATE THE PRESENCE OF AN AC VOLTAGE WHEN CONNECTED TO AN AC CIRCUIT!***

High voltage can be lethal. Always refer to the manufacturer of the high voltage component when maintenance or repairs are needed. In most cases, diagnostics and repair are performed after the high voltage circuits are disabled. If working around or maintaining high voltage circuits, please seek high voltage training.

WARNING – To avoid property damage, personal injury, or death, circuits must be checked using a voltmeter for the presence of both DC and AC voltages. A voltmeter set to DC will not indicate the presence of an AC voltage when connected to an AC circuit! Contacting an unknown AC or DC voltage may cause equipment damage, electrical shock, and/or electrocution.

Understanding High Voltage Equipment and Circuits on International® Products:
Some examples of high voltage equipment that can be encountered on products are as follows:

— Auxiliary Power Units (APUs)

APUs are basically small diesel-powered generator units that are integrated into the vehicle electrical system. APUs are utilized in combination with inverters and battery chargers. APUs are often set up to automatically start when the electrical management system deems it necessary to maintain battery charge or electrical demand requires it.

Note: APU high voltage wiring may NOT be marked for easy identification as high voltage.

Shore Power

Shore power is a connection from a vehicle to an external 120Volt AC power source. The vehicle is equipped with an exterior receptacle that allows connection to an external “shore” power source.

Note: High voltage shore power wiring may NOT be marked for easy identification as high voltage.

Inverters

Inverters are electronic devices used to change DC (Direct Current) into AC (Alternating Current). Some inverters contain converters that also convert AC to DC for battery charging or running 12V equipment.

Converters

Converters are electronic devices used to change high voltage DC (Direct Current) to low voltage DC for battery charging.

Note: High voltage wiring for inverters may NOT be marked for easy identification as high voltage.

Electric Vehicles (EVs)

EVs use high voltage batteries and an electric motor to propel the vehicle. High electrical voltages and currents are present.

Note: The industry standard for high voltage cables is for the cables to be covered in ORANGE CONDUIT.

If orange conduit is observed on a vehicle, please review the safety precautions for that system.

How to Identify High Voltage Circuits:

High voltage circuits are not always connected with large wires. The best way to identify high voltage equipment or circuits is to be familiar with the equipment and circuit diagrams as well as to look for high voltage warning labels and orange conduit. **Inspect the vehicle for any equipment or circuits added after the truck was built (owner/operators may add high voltage components such as inverters or APUs).**

All electrical circuits associated with APUs, shore power, inverters, and EVs should be considered high voltage. The standard for high voltage cabling on EVs is orange. APUs,

inverters, shore power, and cabin 110/120V outlet wiring may not indicate high voltage by visual inspection (they may not be marked and are NOT orange in color).

Servicing International® Products:
The following steps outline the appropriate method to follow to identify and address any maintenance or service on International products with factory-installed high voltage equipment.

1. Complete related training prior to attempting to identify and service any high voltage system.

2. Review the line-set ticket provided with the vehicle or from the Service Portal and identify all high voltage components. Inspect the vehicle for any equipment or circuits added after the truck was built (owner/operators may add high voltage components such as inverters or APUs that could be live and powering circuits in the vehicle EVEN WITH THE IGN OFF AND THE BATTERIES DISCONNECTED).

3. Refer to manufacturer's service publications for identified high voltage components.

4. Physically locate high voltage components on the vehicle and disable them according to manufacturer's instructions (some components may require a waiting period or special procedures to discharge the voltage completely).

5. Use Best Work Practices (see below) when performing work on electrical systems.

Best Work Practices:

WARNING – To avoid personal injury or death, permit only trained responsible and capable persons to operate or maintain the equipment. Carelessly operating or neglecting maintenance despite the safe design of any vehicle and its high voltage equipment may result in personal injury or death.

The danger of injury through electrical shock is possible whenever electrical power is present. Most fatal injuries result from high-voltage exposure; however, people can sustain severe injuries from low voltage power if it has a high current flow.

- Be aware of ALL high voltage equipment on the vehicle; review line-set/build ticket and the owner and service manuals of high voltage equipment **BEFORE** starting any work.
- When working on this equipment, remain alert at all times. Never work on the equipment when physically or mentally fatigued and never work alone near high voltage equipment.
- Always stand on an insulated, dry surface when working on any electrical circuit. Do not handle any kind of electrical device while standing in water, while barefoot, or while hands or feet are wet.
- Always work in an adequately illuminated area.

- Always use appropriate protective equipment: insulated gloves, rubber gloves, goggles/face shield, safety shoes, protective clothing, and insulated tools when working on electrical components/circuits of the vehicle.
- Never wear jewelry when working on this equipment. Jewelry can conduct electricity resulting in electric shock or burns and may get caught in moving components causing injury.
- When working on vehicles that have high voltage devices or equipment, use appropriate alerting techniques in plain view to warn people that may be in the general area and to prevent inadvertent activation of any disabled high voltage circuit(s) during service: safety signs, safety symbols, tags, barricades, cones, etc.
- Keep a fire extinguisher close by at all times. Extinguishers rated “ABCM” by the National Fire Protection Association are appropriate for use on the electrical system. Make sure the extinguisher is properly charged and be familiar with its use. Consult the local fire department with any question pertaining to fire extinguishers.
- Ensure that the high voltage power, high voltage power generating equipment, and high voltage storage devices are disconnected, locked out, or otherwise disabled BEFORE working on or around the vehicle, its electrical circuits, or components. Unless disabled, Auxiliary Power Units (APUs) may start at any time without warning; when this occurs, the circuits associated with the APU become energized with potentially lethal high voltage. Some components may require a waiting period or special procedures to discharge the voltage completely.
- Use an appropriate electrical tester and procedures to confirm that the power is disconnected **BEFORE performing any work on or near any high voltage components/circuits**.
- Exercise caution around output circuits even when the input power is off. Parallel power sources and energy storage devices can still be dangerous. Be familiar with the high voltage equipment installed on the vehicle. Some systems contain high voltage condensers that may require time to discharge after power is removed.
- After disconnecting or exposing a high-voltage connector or terminal, insulate it immediately using insulation tape.
- After completion of any electrical work, **BEFORE restoring the power, verify that parts and/ or tools are removed from the work area and that the fasteners are firmly tightened to the specified torque and the connectors are correctly connected.**
- **Voltage can be fatal at levels greater than 60 volts. High voltage can jump a larger air gap than low voltage. If contact is made with high voltage, it may not be possible to simply “let go.”**
- **Towing an EV with its drive wheels on the ground may cause the motor to generate electricity. Consult the operator’s/owner’s manual for proper towing procedures.**
- **If a high voltage fuse or circuit protection device trips, do not re-energize the circuit until it has been determined that the circuit is safe. See manufacturer’s troubleshooting procedures before servicing a high voltage system.**
- Reference OSHA Regulations as necessary and applicable.

Welding Information:

Electric Welding on the electric vehicle is not recommend. The exception is welding performed at the rear end of the frame to accommodate lift gate installations.

Whenever electric welding is done on any part of the vehicle, it is not necessary to disconnect the International electronic modules in the cab such as the BCM, RPM, and the instrument cluster. The welder's GND must be connected as closely to the weld as possible. Disconnect both the positive (+) and the negative (-) battery cables including the electronic power feeds prior to electric welding. If it is necessary to weld close to an electronic component, it is recommended that the component be temporarily removed.

Devices should also be covered with a protective blanket to prevent splatter from damaging any components.

Consult manufacturer’s instructions for all other electronic modules such as Bendix ABS and WABCO ABS.

Routing Guidelines:

Any hosing, tubing, battery cable, wiring or electrical harness must not rub on a sharp edge. However, due to the high abrasion resistance of synflex tubing, it is permissible for synflex tubing to make contact with the lower edge of the frame rail flange when the tubing is making the transition from the outside to down and under the rail. This does not mean that proper clearance or the need for protective wrap is not needed when synflex line contacts sharp edges or threaded fasteners.

Any hosing, tubing, battery cable, wiring or electrical harness must not rub or make contact with a hot surface.

Nothing should rub or make contact with the copper compressor discharge tubing other than the clamp(s) that support it.

All hosing, tubing, battery cables or electrical harnesses should be supported at least every 18" to 20".

Strap locks used to directly clamp, or support battery cables or main engine wiring harnesses must be no less than 7/16" in width.

Strap locks are not to be used on any bulk hose materials (heater hoses, make-up lines, etc.). Strap locks are not to be used on any Orange high voltage circuits or conduit.

Route and Clip Recommendations:

Electrical Harness:

PROBLEM	REQUIREMENT
SHARP OR ABRADING SURFACE	NO CONTACT
TENSION ALONG HARNESS/WIRES/HOSE	NONE
DISTANCE FROM MOVING PARTS	1”
CONNECTOR CLIPPED TO AVOID DAMAGE	YES
CONNECTORS ARE SEALED	YES
MAX EYELETS PER STUD	3
HARNESS PROTECTED FROM DAMAGE	YES
DRIP POINT FOR HARNESS	YES
DISTANCE OF HARNESS TO FLAMMIBLE FLUIDS	1/2”
HARNESS LOCATION TO FLAMMIBLE FLUIDS	NOT DIRECTLY UNDER
BATTERY CABLES TO FLAMMIBLE FLUIDS	1” MINIMUM
BATTERY CABLE TO CONDUCTIVE SURFACE	1/2” MINIMUM
BATTERY CABLE TIE STRAP	1/2” (250 POUND) WIDE
HARNESS CONTACT WITH METAL SURFACE	NO RELATIVE MOTION
P-CLAMPS – ELECTRICAL	CUSHIONED ONLY
P-CLAMPS FASTENING SUPPORT	NO CANTILEVER
HIGH PRESSURE PIPE/HOSE (>200 PSI)	DON’T CLIP ANYTHING TO THEM
HARNESS THROUGH METAL HOLES	USE GROMMET
FULL ARTICULATED POSITION	OPERATES WITH OUT DAMAGE
CLIPPING FIXED MAX DISTANCE - HARNESS	14”
SPLICES	USE SHRINK WRAP