PRODUCT BROCHURE

INTERNATIONAL®
S13® INTEGRATED POWERTRAIN
EPA 2027



INTERNATIONAL

S13 INTEGRATED

AHEAD OF THE CURVE. 2027 EPA READY.

ADVANCED. INTEGRATED. UNDISPUTED.

The International® S13® Integrated Powertrain combines the performance you want with the 2027 EPA readiness you need. Engine efficiency starts in the combustion chamber. Intake and exhaust ports are key contributors, so we began there. And through exhaustive simulation work, we engineered a new cylinder and piston head design with maximum cooling properties. This double overhead cam design with integrated compression release brake assembly and parallel valve pattern not only helps reduce parasitic loss, but also directly burns less fuel.



WHAT'S NEW

Variable valve timing (VVT)
Adapts valve timing to match real-time operating conditions for smooth performance and exceptional power across all engine speeds and loads.

Variable valve braking (VVB)
Works alongside VVT to deliver improved engine braking performance, with VVB braking at 470 hp.

Electrical architecture
24V alternator, starter, and engine controllers (12V cab and chassis) help enhance cold-crank performance and improve starter and battery life, with up to a 40% weight-savings in components.

EGR cross-over tube eliminated
EGR Cross-over tube and recirculation of exhaust gas removed, simplifying the system architecture. When combined with VVT, can lead to improved combustion efficiency, performance and reliability.

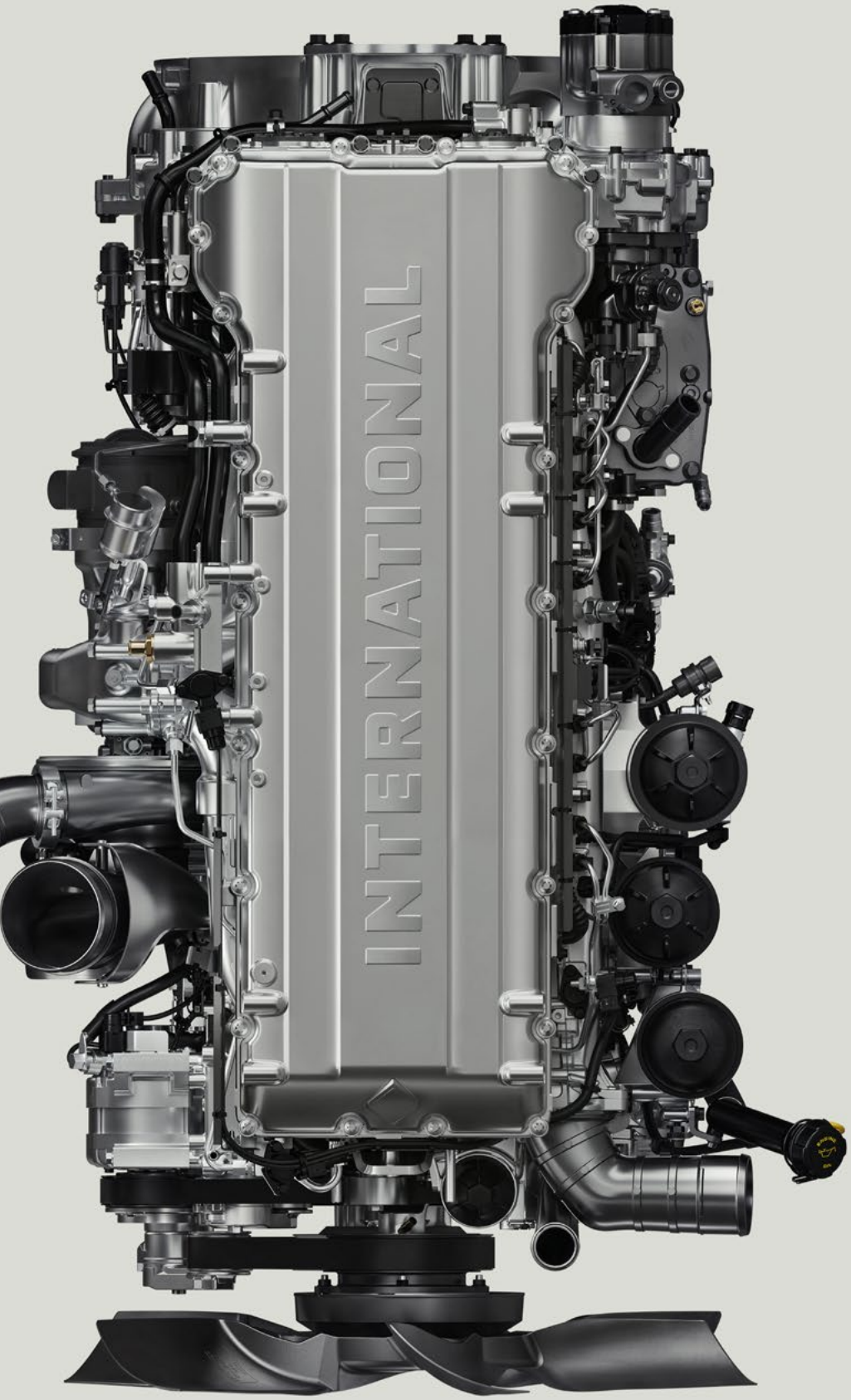

WHAT STAYS THE SAME

Lighest 13-Liter Engine
The S13 Integrated Powertrain is remarkably light in weight – in fact, it is the lightest 13-liter diesel engine in North America. This helps achieve an outstanding payload capacity, along with improved fuel economy — attributes that can make a real difference to your bottom line.

Smooth Shifts
The T14 Transmission features planetary gears to reduce weight and size, making room for chassis packaging and PTO. Powered by an advanced Electronic Clutch Actuator (ECA), it delivers rapid, ultra-smooth shifting without drawing from your air system. That means during complicated maneuvers—like backing a trailer into a tight loading dock—the driver never needs to stop and let the air recharge.

Factory-installed PTOs Available
Single- and dual-transmission PTOs as well as engine REPTO and FEPTO are available with a variety of common SAE adapters, installed directly at the factory. This can be a significant advantage when adding equipment, as it speeds up the installation process and standardizes components.

Fewer Active Regens
Eliminating the heavy EGR cooler greatly reduces soot or particulate matter at the source. The Dual Stage Aftertreatment System is engineered to use two DEF treatments to handle NOx—cutting cost, complexity, and weight while reducing active regens. Plus, sending nearly 100% of exhaust flow through a simple, fixed-geometry turbocharger maximizes overall engine efficiency and performance.

SO HOW DID WE DO IT?

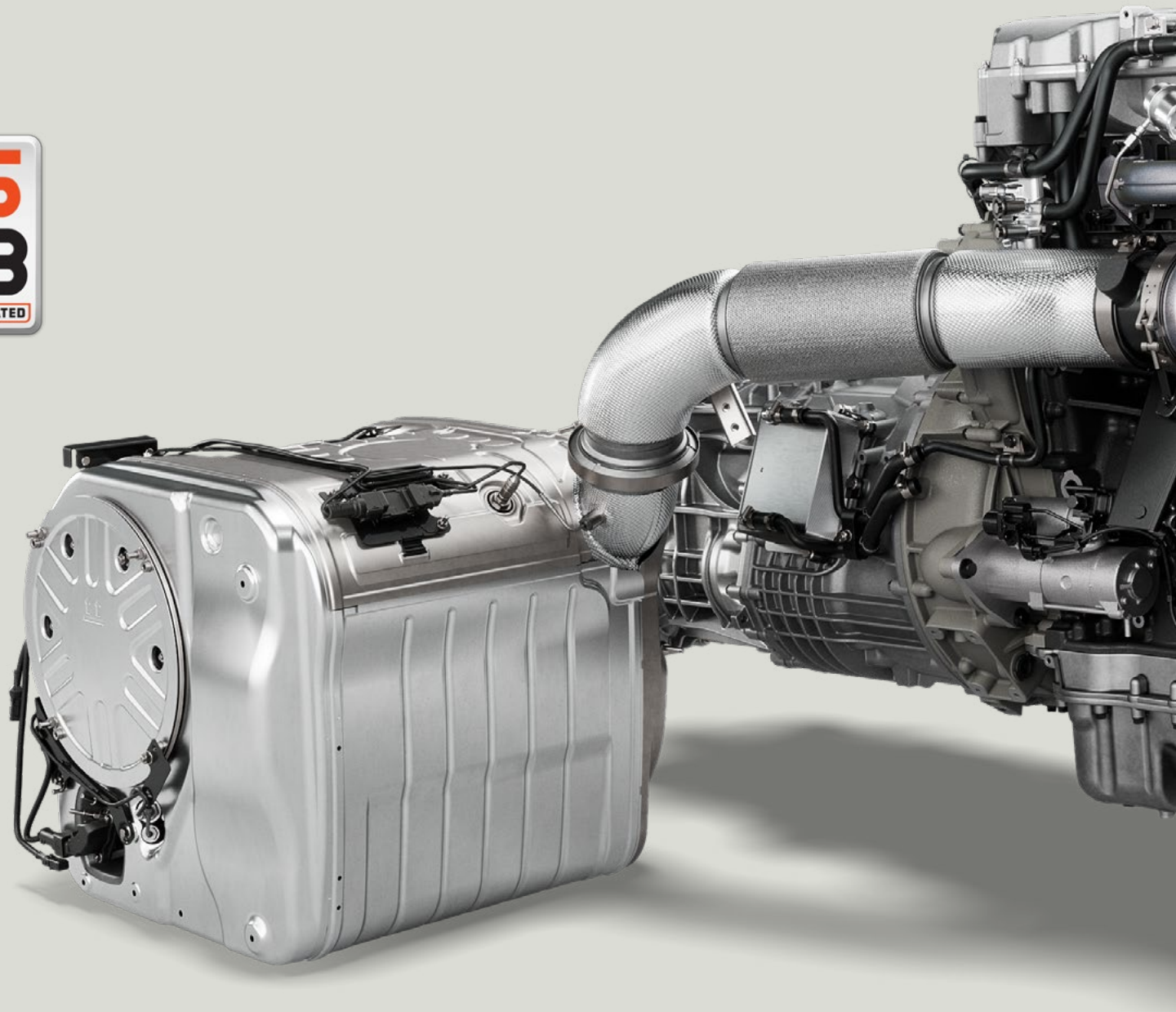

SUPERIOR OPERATING ECONOMY. STELLAR PERFORMANCE. SIMPLE, EASY-TO-SERVICE DESIGN.

A clean sheet of paper and decades of experience. That's what the engineering team started with when they began work on the International® S13® Integrated Powertrain.

And this wasn't just any team. This was a dream team of engineers located literally all over the world. Thanks to this spirit of collaboration between partner companies, the team was able to shift what's possible and rethink, redesign and reinvent what an integrated powertrain can be. The result is an engine, transmission and aftertreatment system designed to work as one that's simple, easy to service and delivers stellar performance with superior operating economy.

The International® LT® with the S13 Integrated Powertrain is expertly engineered to be one of the most fuel-efficient trucks within the on-highway aero category. Drivers who move our world forward, drive the S13 Integrated.

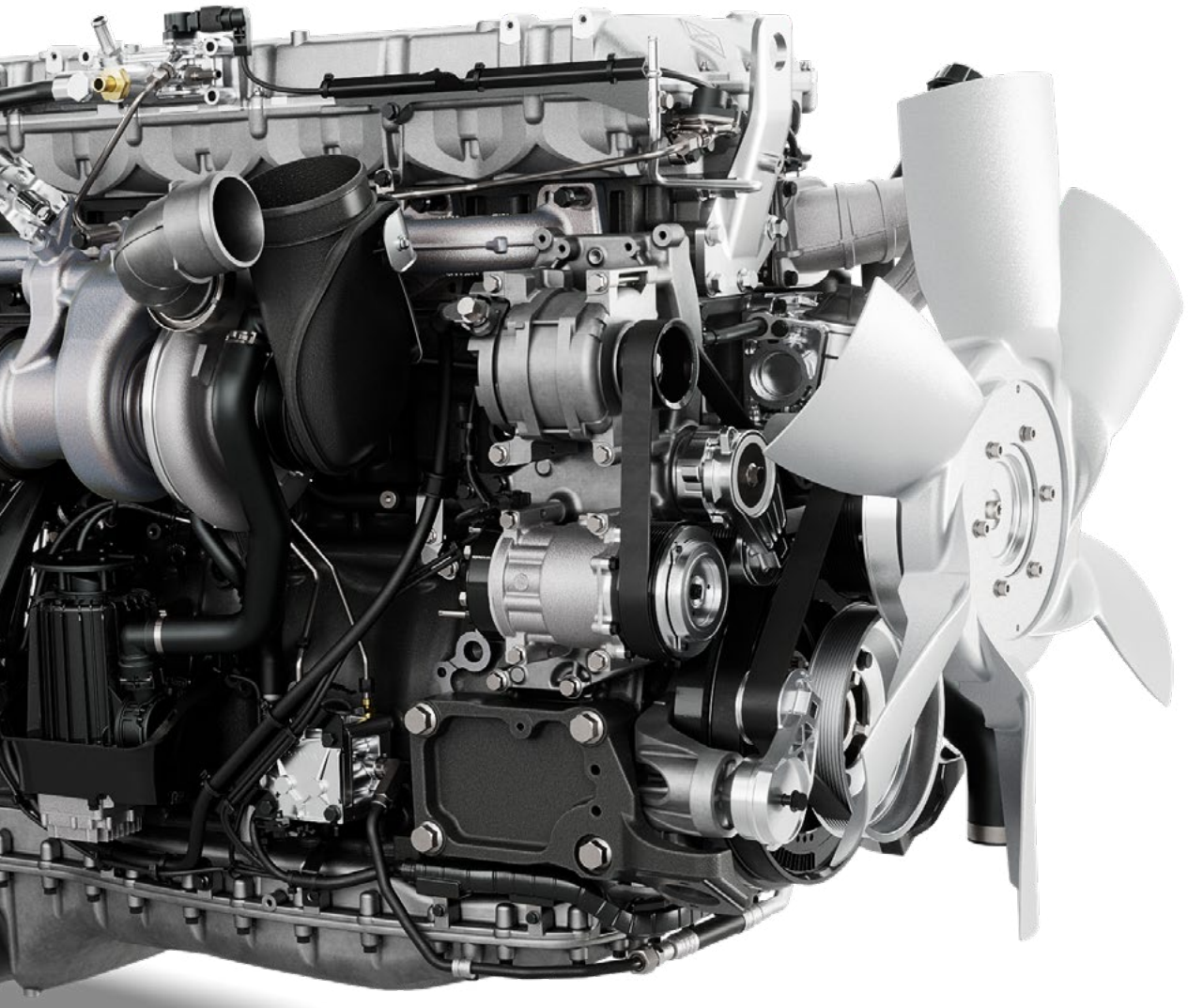

THE OPEN ROAD

When the road stretches over the horizon, it's comforting to know you have a powertrain that delivers outstanding reliability, powerful performance and exceptional fuel economy.



ENGINEERED TO PERFORM.

S13 Integrated is available with:
International® LT® Series truck
International® RH™ Series truck

ON THE JOB

Brimming with features that can boost productivity, the S13 Integrated Powertrain is equally adept when the road ends and the jobsite begins.



NO MATTER THE ARENA.

S13 Integrated is available with:
International® HX® Series truck
International® HV™ Series truck
(models 515/615 only)

DOING MORE WITH LESS.



THE INTERNATIONAL LT WITH THE S13 INTEGRATED POWERTRAIN IS ONE OF THE MOST FUEL-EFFICIENT TRUCKS WITHIN THE ON-HIGHWAY AERO CATEGORY.

NO ONE THOUGHT IT WAS POSSIBLE. EXCEPT US.

Finding incremental fuel economy gains has kept diesel engineers busy for decades. And recently, most believed the diesel engine had already reached its limit in terms of efficiency. We didn't. If anything, we took it as a challenge. After all, not only does better fuel economy mean less CO2 into the atmosphere, it's also better for businesses thanks to reduced operating costs and ultimately, greater profit.

E



IT ALL COMES TOGETHER

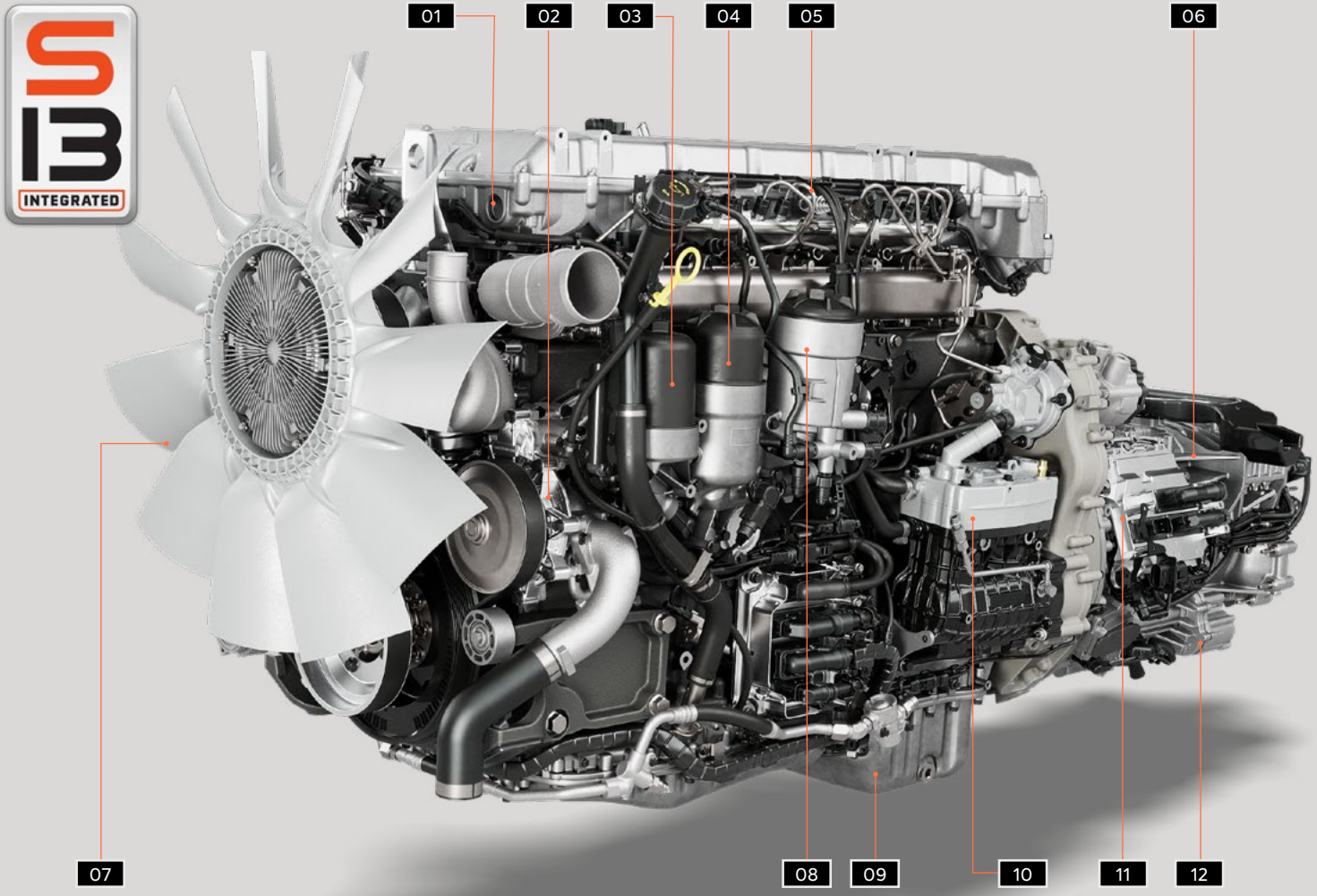

The International® S13® Integrated Powertrain does more with less — delivering strong performance through a simpler, more efficient design. The engine features a double overhead cam design with Variable Valve Timing and an integrated compression release brake, along with a standardized 24V electrical architecture (alternator, starter, engine controllers), while retaining a 12V cab and electrical system for accessories and body controls. The engine, combined with the Dual Stage Aftertreatment System, is so effective at reducing emissions that neither a Diesel Oxidation Catalyst nor any EGR hardware is needed. This not only reduces weight and complexity, but it also means you never have to stop to perform an active regen—improving uptime and productivity.

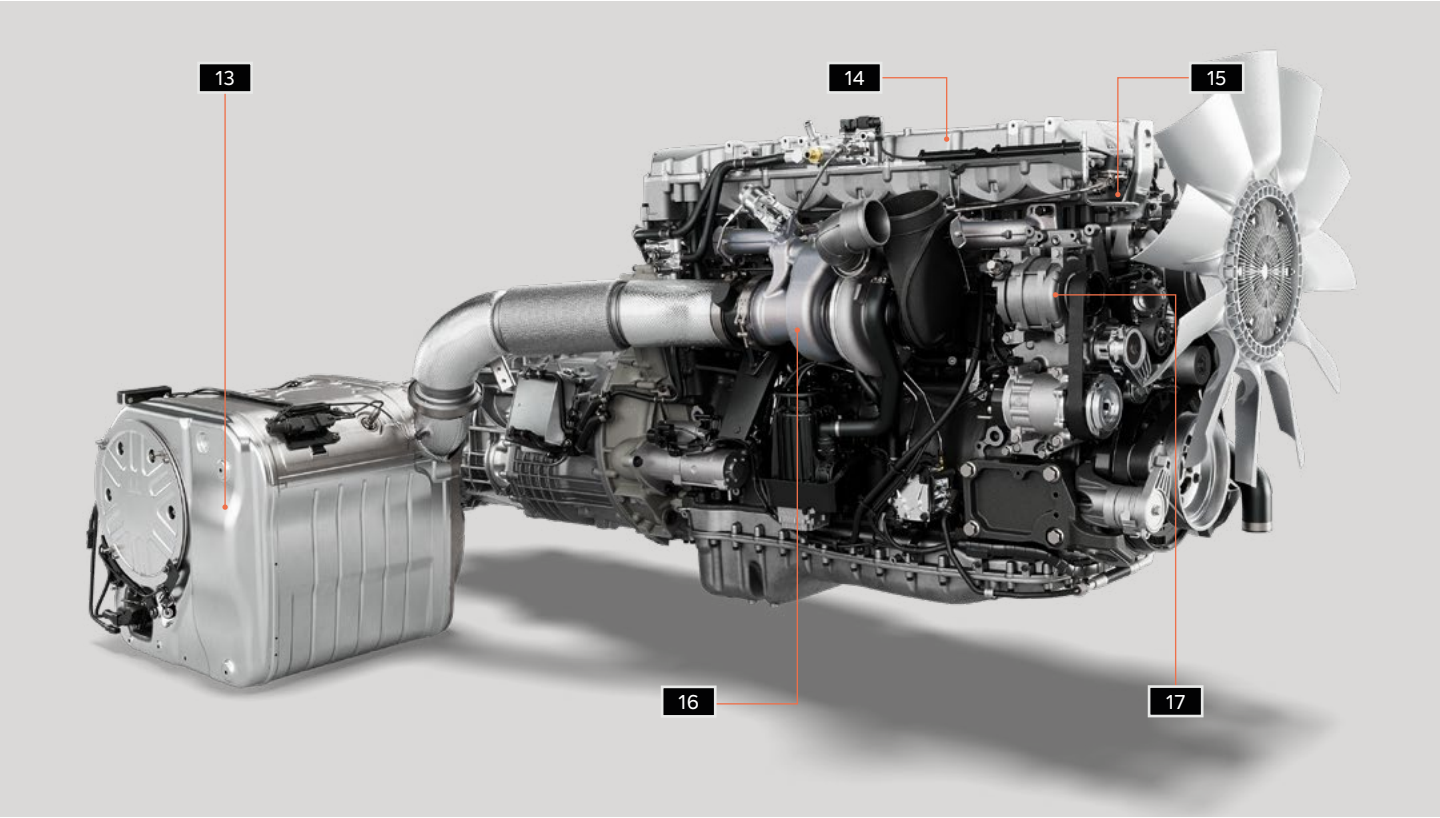

PARTS AND SPECIFICATIONS

01	Variable Valve Timing (VVT)	Adapts valve timing to match real-time operating conditions for smooth performance and exceptional power across all engine speeds and loads. Improved engine braking performance from 470hp to 540hp resulting in improved brake-wear life and overall performance.
02	Water Pump	Low displacement, Low parasitic losses
03	Oil Centrifuge	Further removes soot and other contaminants from oil that cannot be eliminated by the oil filter alone. Helps maintain oil drain interval customers expect.
04	Oil Filter	Cartridge style
05	High-Pressure Fuel System	1800 Bar
06	T14® Transmission	14-speed single countershaft geartrain transmission with wide ratio spread for efficiencies on flatlands and performance on hilly terrains
07	11-Blade Fan (Vocational) 6-Blade Fan (On-highway)	For additional efficiency
08	Fuel Filter	Top access, cartridge style
09	Oil Pan	Aluminum pan provides corrosion protection (stainless steel available)
10	Air Compressors	▪ Single cylinder (iron) ▪ Two cylinder (aluminum) ▪ Two cylinder clutched (aluminum)
11	Transmission Control Module (TCM)	24V TCM uses learned driver behavior and predictive shifting, utilizing GPS and topography data to optimize gear selection for fuel efficiency and performance
12	Electronic Clutch Actuator (ECA)	Delivers fast, smooth shifting
13	Dual Stage After-Treatment	▪ Compact design for more frame rail mounting space ▪ No active DPF regen needed
14	Aluminum Valve Cover	Rugged and lightweight
15	No Cooled EGR, EGR cross-over tube eliminated	No Diesel Oxidation Catalyst or recirculation of exhaust gas required
16	Fixed Geometry Turbo	More reliable and efficient design
17	24V Alternator, Starter, Engine Controllers	Delivers enhanced cold crank performance plus helps to improve starter and battery life

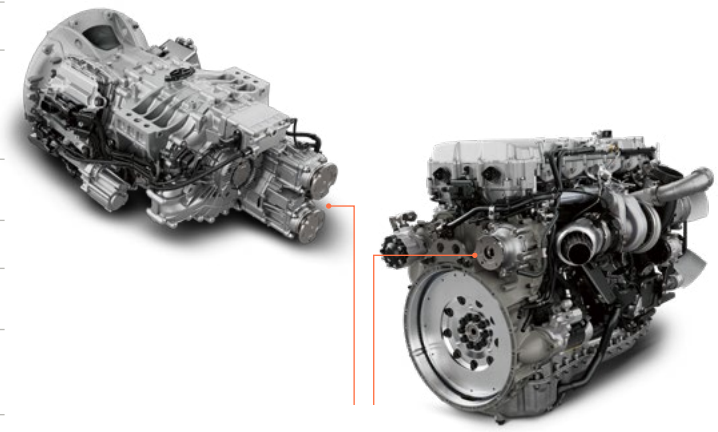

Factory-Installed PTOs available

- Single- and dual-transmission PTOs available with a variety of common SAE adapters, installed directly at the factory
- REPTO and FEPTO options available without horsepower restrictions





SHIFT WHAT'S POSSIBLE.

Any engine, no matter how well designed, is only as good as the transmission it's mated to. Delivering the power to the road in a smooth, predictable manner is no small feat when you consider the torque delivered by heavy trucks. Because they were developed in unison, the engine and transmission of the S13 Integrated Powertrain are designed to work in perfect harmony. The result is the fully automated manual T14 transmission with 14-speeds, including overdrive.

T14® TRANSMISSION

The T14 automated manual transmission shifts seamlessly. It requires no input from the driver in terms of being in the right gear at the right time.

Transmission control module (TCM)
Predictive cruise control, eco-coast, downhill speed control, and predictive shifting can be found in one module - the TCM. Combining these features into one module means the vehicle feels more natural and intuitive and, ultimately, more efficient. The transmission has an electronically controlled clutch actuator that works in sync with the engine to deliver fast and smooth shifts. Since it does not consume air during complicated maneuvers, like when you're backing a trailer into a tight loading dock, the driver never needs to stop and let the air recharge.

Driver shift modes
Three different shift modes (optional) for ultimate control for the driver

- **Economy** — Predictive shifting with fuel efficiency focus
- **Performance** — Perfect balance
- **Performance+** — Shifting at peak power with focus on performance
- **Off-road** — HX/HV only

Precision maneuvering mode
Gives the driver more control of the vehicle at low speeds for specific movements, such as reversing into a loading dock, connecting to a trailer or navigating a crowded construction site. Torque value for pedal input is reduced. This mode allows the clutch to slip more easily for slow and smooth performance.

Paver Assist (HX Series / HV Series)
Enables the truck to be shifted from neutral into a forward gear without the driver needing to depress the brake. This helps ensure the smooth/uninterrupted delivery of material into the following asphalt paver.

Rock Free
Extracts a truck that has sunk into the ground by rocking it back and forth (without spinning the wheels) until it's free.

Eco-coast
Disengages the driveline when traveling downhill, using the momentum of the vehicle to save fuel.

Creep mode
This mode allows the vehicle to automatically start moving when the brake pedal is released while the transmission is in gear. This mode is useful in high traffic and other events where constant vehicle movement is necessary without the use of the accelerator pedal.

Downhill speed control
This mode utilizes cruise control and the engine brake to descend at a set speed.

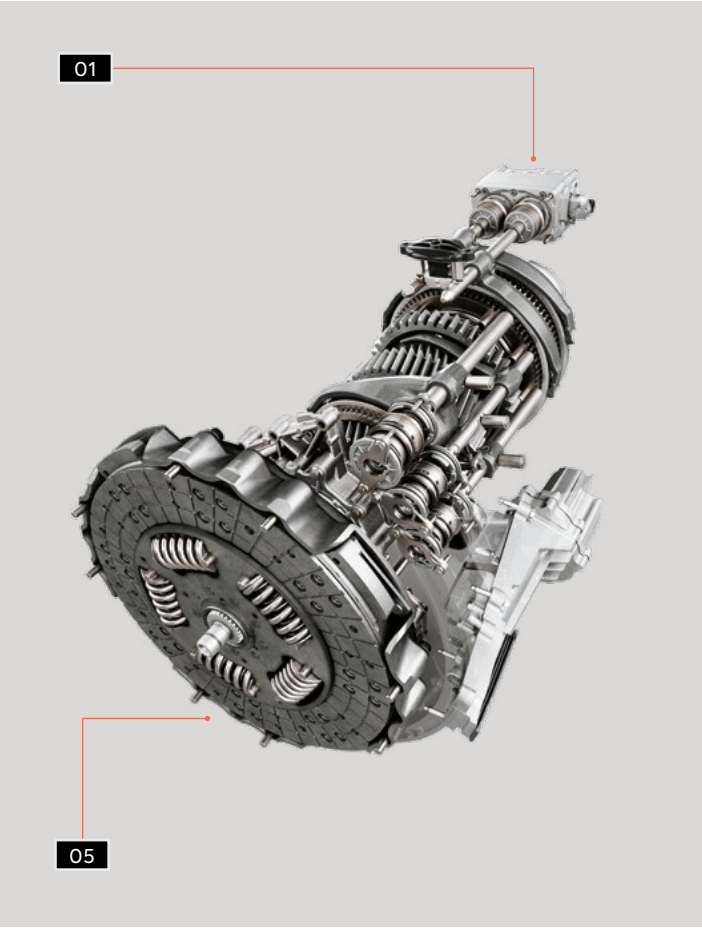

T14 AUTOMATED MANUAL TRANSMISSION
PARTS AND FEATURES

01	Shift actuators	Shift actuator packaging was designed specifically for automated functionality (rather than adapted from a manual), allowing for more compact gearbox housing
02	Variable oil level upper reservoir	Oil is pumped to the reservoir under lower loads to reduce parasitic losses, allowing for the continuous lubrication of gears by the oil sprayers
03	Planetary gears	The planetary gear set eliminates the need for a dedicated reverse gear, shortening the gearbox and allowing for better packaging within the chassis
04	Single countershaft	A single countershaft with helical gears lowers the overall weight of the unit without compromising the durability or performance of the transmission
05	Electric clutch actuator	The electronically controlled clutch actuator (ECA) helps the T14 deliver fast and smooth shifts - perfect for those short left-hand traffic lights. And since it does not consume air, the driver never needs to stop to let air recharge during complicated maneuvers

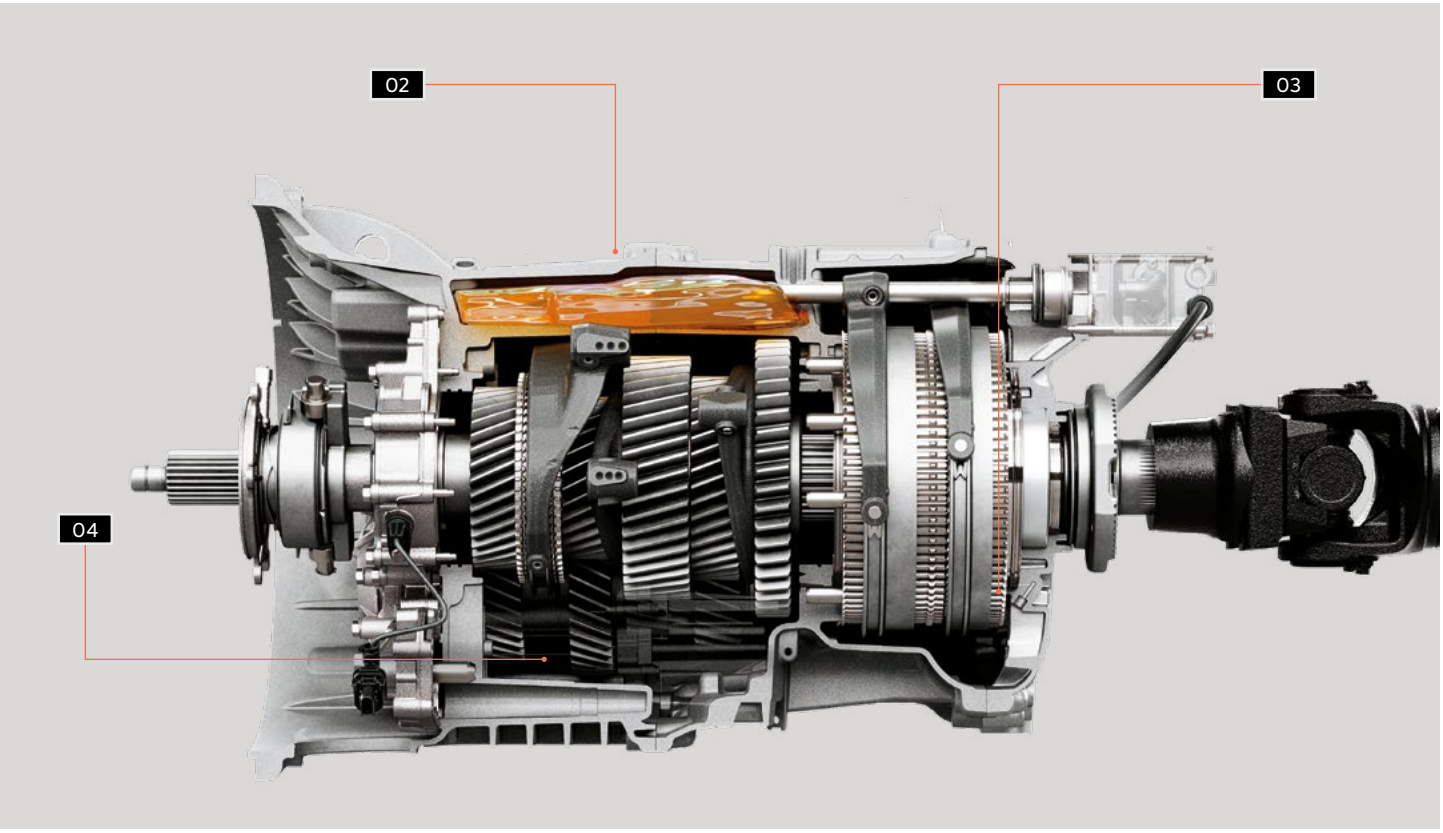

UPTIME ABOVE ALL ELSE.



When developing the International S13 Integrated Powertrain, the engineers knew it needed to have iron-clad reliability out of the gate.



The entire powertrain was designed to allow each individual component – engine, transmission and aftertreatment – to focus on doing what it does best. Eliminating the EGR cooler is a prime example. Instead of trying to control NOx emissions inside the cylinder, the engine operates with zero EGR during regular operation, so it can focus on generating more power. Plus, no cooled EGR during normal operation means nearly 100% of the exhaust flow goes through the turbo, allowing the use of a simple, more reliable fixed geometry turbocharger.

Eliminating a cooled EGR from the combustion cycle meant the engineers had to find another way to treat NOx. They accomplished this by developing a Dual Stage Aftertreatment design that injects a first dose of DEF just downstream of the turbo in the evaporator tube and a second dose inside the aftertreatment module. Since cooled EGR has been eliminated from the combustion chamber, much less soot or particulate matter is generated. This allows for extended service intervals and reduce the need for active regens. In fact, the cleaner combustion cycle has so much less soot that the engineers were able to eliminate the need for a diesel oxidation catalyst (DOC) in the aftertreatment system. Combined, the Dual Stage Aftertreatment system provides a simple, reliable solution that's easily serviceable.

- Improved airflow and volumetric efficiency through combustion chamber / integrated CRB (compression release engine brake)
- Optimized piston assembly & cylinder design
- Simple and reliable fixed geometry turbo
- No EGR cooler
- Long beam transmission mount design provides improved durability and ride
- Robust components – stronger mounting bolts on engine/ cylinder block

DESIGNED FLEETS IN



FITS INTO YOUR FLEET LIKE YOUR FAVORITE PAIR OF WORK GLOVES.

WITH MIND.



The International S13 Integrated Powertrain was engineered to seamlessly integrate into fleets of all sizes. Not only can fleets benefit from exceptional fuel economy, but they also get extended service intervals to keep their equipment on the road– plus the largest service network in the industry for convenient access to white-glove treatment from ASE-certified technicians. Fleets can even order (if desired) the International S13 Integrated Powertrain with a single or dual transmission mounted PTO option installed directly at the factory. All trucks equipped with the S13 Integrated are designed to work seamlessly with International's Advanced Remote Diagnostics, which has helped some fleets reduce vehicle failures requiring a tow by up to 80%.

Fleet friendly

- Largest North American service network in the industry (with Love's network)
- Single point of service for vehicle and powertrain
- Extended service/ maintenance intervals
- Wide selection of warranty and extended service contracts



The International S13 Integrated Powertrain was verified in some of the most challenging environments in North America.

TORTURE TEST
IN THE REAL WO



TED
ORLD.

Location	Conditions
Commerce City, CO	Altitude, grade
Las Vegas, NV	Summer, grade
North Pole, AK	Winter temps down to -40°F
Fargo, ND	Winter
New Carlisle, IN	Durability events plus routes
International Falls, MN	Winter
Bemidji, MN	Winter
Apache Junction, AZ	Summer temps up to 110°F

Keeping the driver comfortable, informed and empowered has been a mantra at International for decades as part of our DriverFirst™ Philosophy.

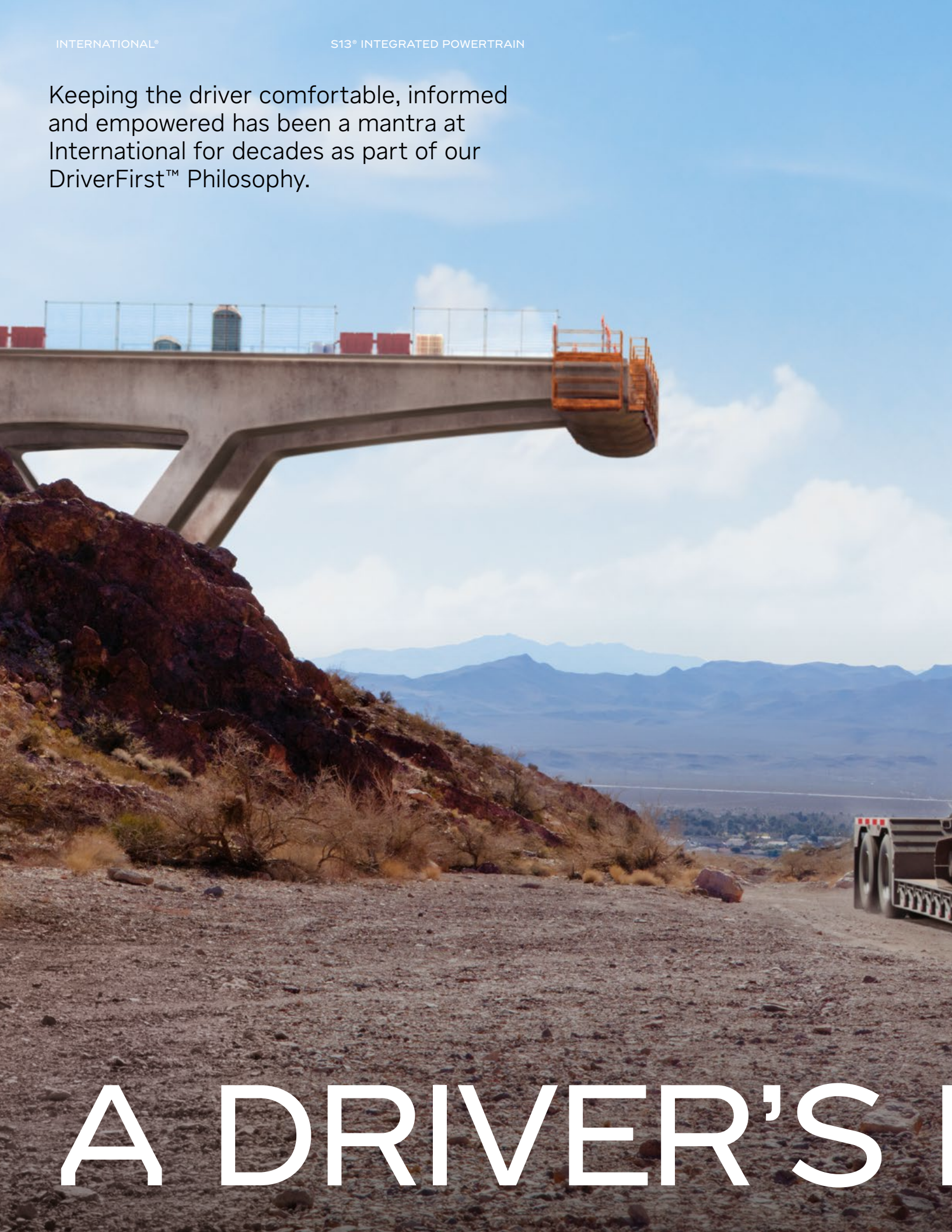

A DRIVER'S

The International S13 Integrated Powertrain takes it a step further by offering smooth and quiet operation with superior capabilities. At the jobsite, full torque is available at 900 RPM for nearly immediate power when it's needed most. On the highway, a wide gear ratio means optimal efficiency on flatlands with the performance drivers crave on hilly terrain. And when descending in either form, drivers can rely on the new compression release brake to deliver strong, secure braking power of up to 470 HP (at sea level) for quiet and effective braking.



ENGINE.

MY INTERNATIONAL

My International™ is a comprehensive, connected digital ecosystem that streamlines how you manage your fleet and collaborate with our dealer network. Whether you operate one truck or a thousand, we provide the real-time insights and communication tools you need to reduce costs, save time, and maximize uptime.

Everything you need, connected and in one place. with all makes and models.*

INDUSTRY-LEADING CONNECTIVITY.

Take your performance to the next level. Our connected vehicle technology includes tools designed to give your business and operations that extra edge.

5 Years On Us
Advanced Remote Diagnostics is included for five years standard on new LT Series and RH Series trucks.

OTA Programming
Ensure peak performance with remote software software programmable parameter updates to the International S13 Integrated Powertrain - anytime, anywhere.

Fleet Health Monitoring
Weekly reports on vehicles showing fault codes that are most likely to suggest a risk of roadside failure.

Gateway Integrations
Our factory installed telematics system can connect you to select fleet management and compliance software providers seamlessly, without the cost and complexity of additional hardware installation on your vehicle.

Remote Lock/Unlock
Avoid the downtime and expense of vehicle lockouts with instant remote access.

* For most commercial vehicles powered by diesel engines, 2007 MY and later.

Our Advanced Remote Diagnostics platform features:

- Reports on vehicle health issues that include severity ratings, likely needed parts and service, and recommended actions.
- Comprehensive vehicle health reports that include performance data, fault history and more.
- Up-to-date GPS location with customizable geofencing reports that can help ensure vehicles are where they need to be.
- Insights delivered how you need it — via our online portal, your email inbox, a mobile app and more.

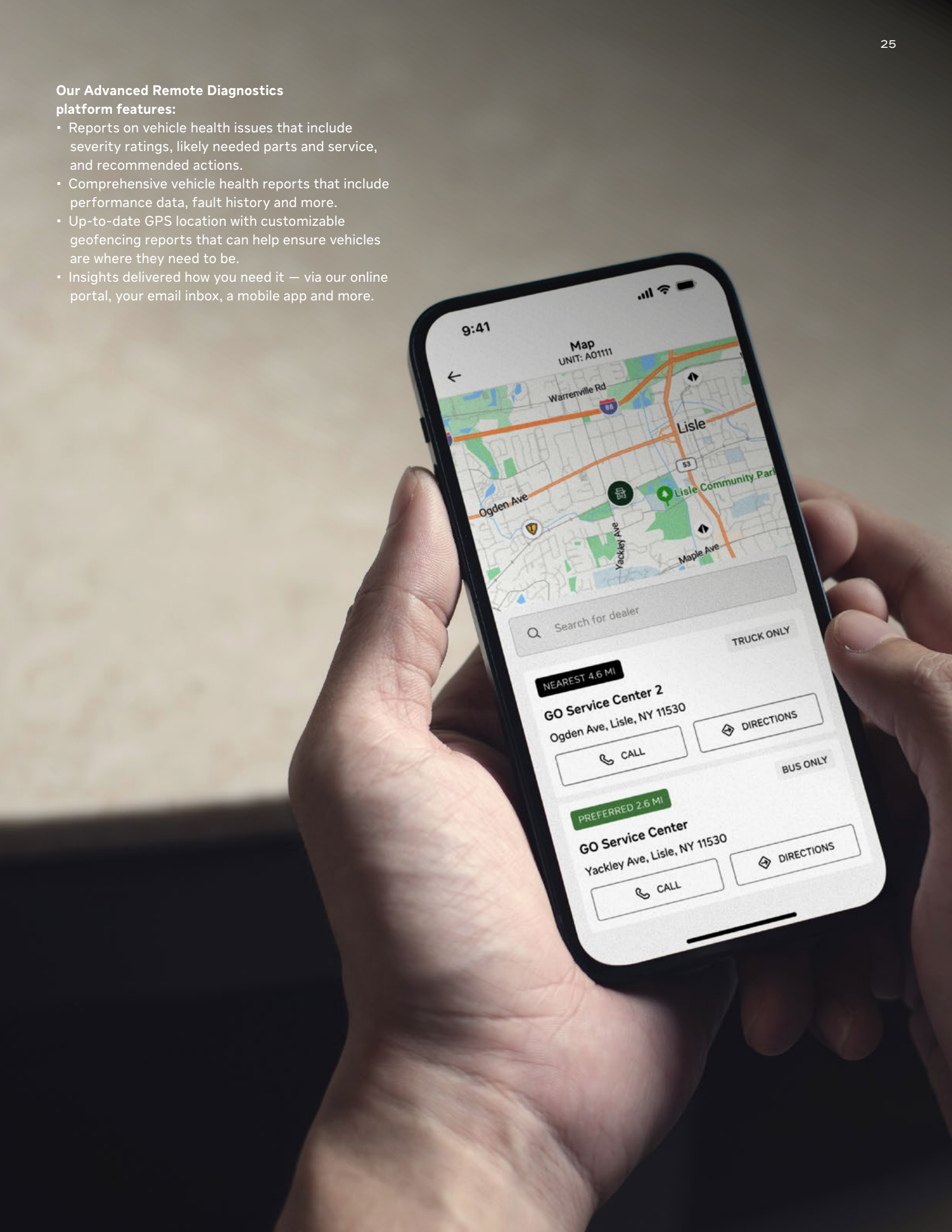



We understand that your business depends on the reliability of your equipment. Our comprehensive ownership solutions provide greater productivity, efficiency and lower total cost of ownership for your fleet.

SERVICE CONTRACTS.

Package Options		Core	Extended	Complete (Best Value)
Maintenance and Service	Planned Maintenance (includes Select Chassis Items)	✓	✓	✓
	84-Point Inspection	✓	✓	✓
	Proactive Service Planning and Scheduling	✓	✓	✓
	Customer Notifications	✓	✓	✓
	Service Event Orchestration	✓	✓	✓
Powertrain Coverage Service Coverage*	Engine and Aftertreatment		✓	✓
	DEF System		✓	✓
	Transmission and Clutch		✓	✓
Extended Non-Powertrain and Chassis Service Coverage*	Cooling and HVAC			✓
	Starter / Alternator / Electrical			✓
	Suspension and Steering			✓
	Axles / Propshaft / Frame and Bumper			✓
	Braking and Fuel Systems			✓
Wear Item Replacement		Optional	Optional	Optional
Towing Coverage		Optional	Optional	Optional
Mobile Service Reimbursement**		Optional	Optional	Optional
Annual DOT Inspections	One per Year	Optional	Optional	Optional
Additional Chassis Lube	One Service Event Between Oil Changes	Optional	Optional	Optional

Coverage Term Options

Published terms include 2, 3, 4, 5, and 6-year service contracts with a variety of available mileage and service coverage options. Not all businesses operate the same way—and your maintenance coverage shouldn't either. International offers flexible plans based on miles, months, and/or hours, with maintenance leads triggering automatically based on whichever interval is reached first. That means your operation—not a fixed schedule—drives maintenance timing, maximizes uptime and simplifies planning. Choose the package that fits your needs or work with your dealer on a custom solution.

PLANNED MAINTENANCE

Consistent, reliable, high-quality work across the industry's largest service network in North America—your one-stop destination for maintenance, warranty work, and repairs. With genuine OEM parts, highly trained technicians, and coordinated service orchestration, you receive efficient, accurate service every time. Built-in multi-point inspections and locked-in pricing provide inflation protection and cost predictability.

PROACTIVE SERVICE PLANNING & SERVICE EVENT ORCHESTRATION

Stay ahead of maintenance and minimize downtime. Using real-time vehicle data, we help you plan service in advance—monitoring your vehicle and contacting you ahead of needed maintenance to schedule a convenient time that keeps your operation moving. We actively manage and expedite repair events by ensuring the dealer has the bay, technician, and parts required, coordinating support, ensuring accuracy, and keeping you informed every step of the way—so you can get back on the road quickly.

MOBILE MAINTENANCE

Keep your trucks moving and your operation on schedule with Mobile Maintenance. Instead of taking your vehicle off route and into the shop, qualifying service events can be performed where your truck is, helping reduce downtime and disruption to your business.

COMPLETE VEHICLE COVERAGE

Protect your vehicle's powertrain and other key components, including electrical, cooling, suspension systems, and more. Plans feature a guaranteed $0 deductible, 100% parts and labor coverage, and NO claims maximums.

*Contact your International® Dealer today for more details on complete component and systems coverages.
**Mobile Service Reimbursement is only available with a planned maintenance service contract.
These service contracts are available at no financing cost. Ask your dealer about a payment program through International® Financial.

S13 INTEGRATED

SPECIFICATIONS

Engine type	Diesel, 4-Cycle
Configuration	Inline 6-Cylinder
Displacement	12.74L (777 cu. in.)
Bore & Stroke	5.12 in. x 6.30 in. (126 mm & 166 mm)
Compression Ratio	23:1
Aspiration	Fixed Geometry Turbocharger
Combustion System	1800 bar Common Rail
Engine Lubrication	47.5 quarts (45L)
Total Engine Weight	2,284 lbs. (1,036 kg)
Valves	4 Valves per Cylinder, Dual Overhead Camshaft
B10 Design life*	1,200,000 mi (1,931,000 km)

HORSEPOWER AND TORQUE

HP @ 1800RPM	Torque [lb-ft] @ 900 RPM	Governed speed [RPM]
370*	1250	2000
400	1450	2000
400*	1850	2000
430	1550	2000
450	1750	2000
470*	1750	2000
475**	1750	2000
515	1850	2000

* LT Series and RH Series Only
** HX Series Only

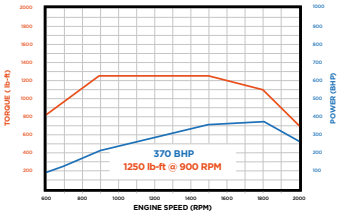

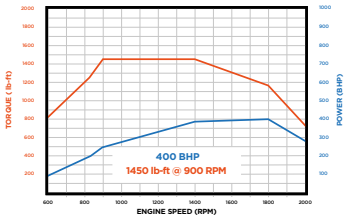

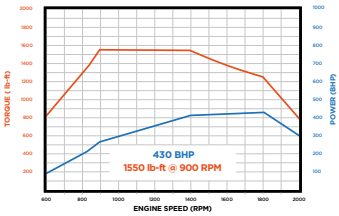



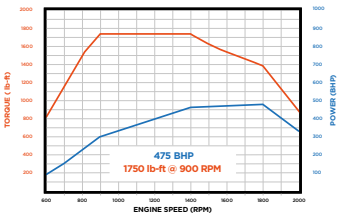

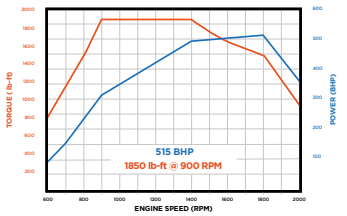

INDUSTRY-LEADING ENGINE WARRANTY

Base Engine	24 months; unlimited miles, unlimited hours*
Base Major Component	60 months; 500,000 miles
Base Towing	24 months; unlimited miles, unlimited hours**
Optional Engine	Up to 72 months, 600,000 miles
Optional Major Component	Up to 84 months, 700,000 miles

* Fire & rescue applications: 60 months/100,000 miles/unlimited hours
**Towing for vehicles with engine failures

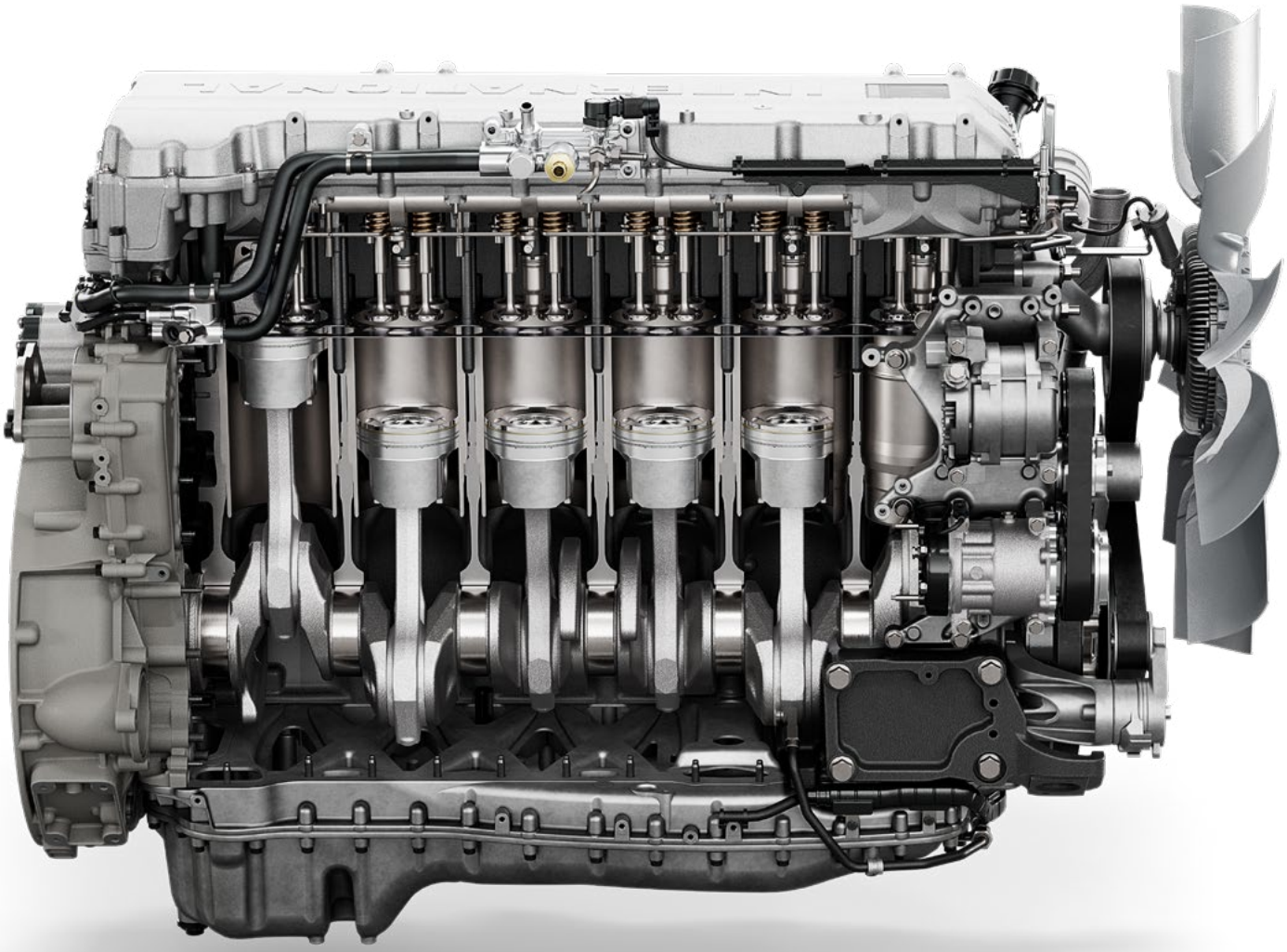


KNAACK

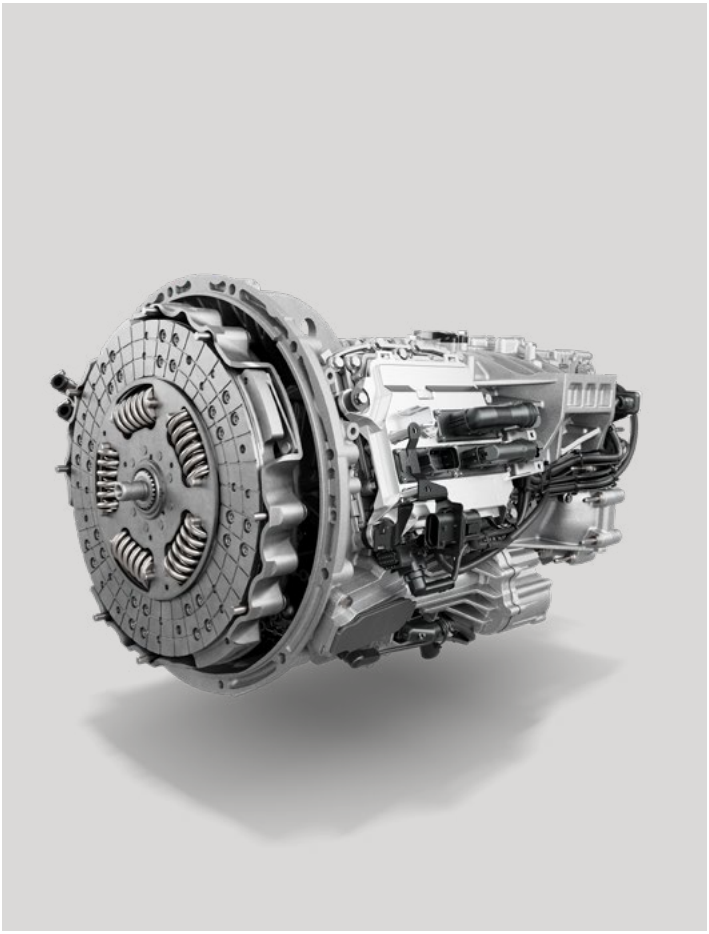

T14 TRANSMISSION KEY BENEFITS

Deep low-end gearing and shifting smoothness, delivering efficiencies of a direct drive in an overdrive package

14-speed including 2 crawler gears

Single countershaft transmission designed for simplicity and reliability

Vocational-specific drive modes, including paver assist, off-road and split shaft

TRANSMISSION BASE WARRANTY (INCLUDES TOWING)

COMPONENT	LT®/RH® SERIES	HX®/HV™ SERIES
Transmission	60 months; 750k miles (1,200,000 km)	Axle Ratings <52k: 36 mo./unlimited Axle Ratings ≥52k: 24 mo./unlimited
Clutch	36 months; 350k miles (563,000 km)	Axle Ratings <52k: 36 mo./unlimited Axle Ratings ≥52k: 24 mo./unlimited

GEAR RATIO

Gear	Ratio	Step	Gear	Ratio	Step	Gear	Ratio	Step
R6	4.59*	-	1	20.81	29%	8	3.53	29%
R5	5.91*	-	2	16.16	29%	9	2.77	29%
R4	7.61*	-	3	12.57	29%	10	2.15	29%
R3	9.81*	-	4	9.76	29%	11	1.66	29%
R2	12.60	-	5	7.56	29%	12	1.29	29%
R1	16.23	-	6	5.87	29%	13	1.00	29%
			7	4.55	29%	14	0.78	-

*Optional

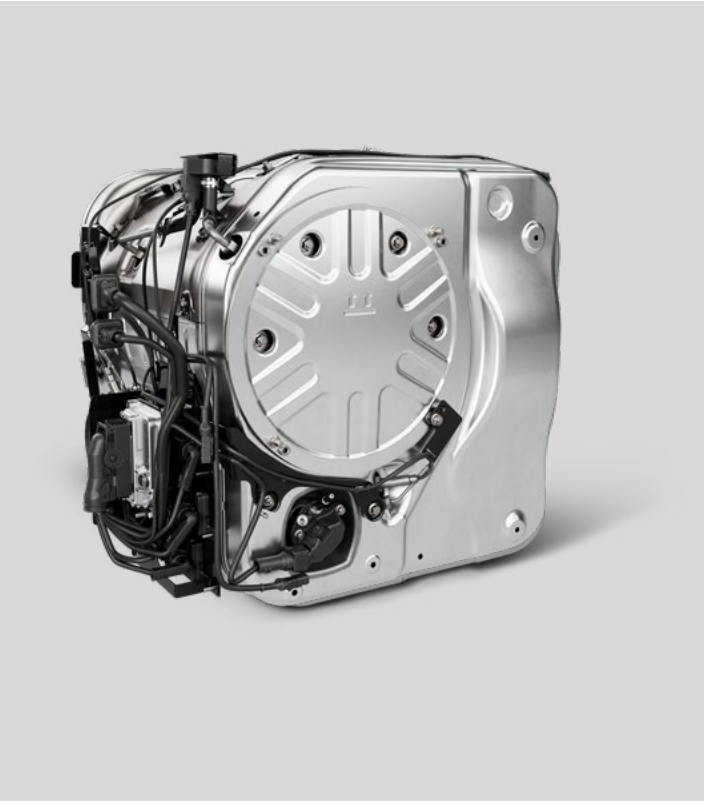

DUAL STAGE AFTERTREATMENT KEY BENEFITS

With Dual Stage Aftertreatment and significantly improved emission control, the combustion can be optimized further for improved performance and fuel efficiency.
- Two DEF injectors
- Dual Stage catalysts with upstream and midstream DEF dosing

No driver interaction required; the system manages the regeneration during operation

DPF filter does not need to be cleaned/replaced until 650,000 miles @ >8.2 mpg

Robust, compact aftertreatment allows less heat loss and helps significantly in improving the fuel economy and packaging

DUAL STAGE AFTERTREATMENT BASE WARRANTY

24 months, unlimited miles, unlimited hours


Conti EcoPlus HS

We understand making money means keeping your vehicles on the road.

That's why uptime is so important to us. Dependable equipment spec'd for your needs or requirements is just the beginning. We also focus on fuel economy, preventive maintenance, optimized service intervals, and more to make sure the low cost of ownership of our vehicles helps keep you in the black.

Maximum Uptime Repair Before Failure
Prognostics that move unplanned repairs, to planned. Optimizing maintenance using vehicle performance and predictive data.

Predictive Parts Stocking
Dealer parts inventory management uses AI and telematics data to predict stocking needs. This ensures the best parts are on dealer shelves to support customers.

Parts You Need Where And When You Need Them
Our partnership with Love's Truck Care & Speedco adds 400+ additional locations for quick, conveniently located access to light mechanical and select warranty work.

International® Dealer Locations **700**

Love's Truck Care & Speedco Locations **400**

Total Service Locations **1,100**

Love's speedco TRUCK CARE

Find out more at
international.com

2701 International Drive
Lisle, IL 60532 USA



Note: The information and conclusions contained herein are believed to be correct at time of publication, but do not necessarily apply to similar vehicles with different specifications or with production dates after the production of this publication. Vehicles with different specifications or later dates of production may yield different results. Vehicle specifications are subject to change without notice. TAD22004 07/2026 ©2026 International Motors, LLC (d/b/a International Motors USA LLC in Illinois and Ohio). All rights reserved. All marks are trademarks of their respective owners.